SEABROOK CITY COUNCIL
NOTICE OF REGULAR CITY COUNCIL MEETING
TUESDAY, JUNE 21, 2016 - 7:00 PM

NOTICE IS HEREBY GIVEN THAT THE SEABROOK CITY COUNCIL WILL MEET ON **TUESDAY JUNE 21, 2016 AT 7:00 PM** IN THE CITY HALL CITY COUNCIL CHAMBERS, 1700 FIRST STREET, SEABROOK, TEXAS, **TO DISCUSS, CONSIDER, AND IF APPROPRIATE, TAKE ACTION** WITH RESPECT TO THE ITEMS LISTED BELOW.

THIS FACILITY IS WHEELCHAIR ACCESSIBLE AND ACCESSIBLE PARKING SPACES ARE AVAILABLE. REQUESTS FOR OTHER ACCOMMODATIONS OR INTERPRETIVE SERVICES, MUST BE MADE, 48 HOURS PRIOR TO THIS MEETING. PLEASE CONTACT THE CITY SECRETARY'S OFFICE AT (281) 291-5600 OR FAX (281) 291-5710 FOR FURTHER INFORMATION.

PLEDGE OF ALLEGIANCE

1. PRESENTATIONS

1.1. Open Space and Trails Recognitions
Presentation of certificates of recognition to the volunteers who work tirelessly to help maintain and beautify the Seabrook parks and trails. (Burton)

1.2. Open Space and Trails Committee Report
Presentation of the Open Space and Trails Committee Quarterly Report. (Burton)

1.3. Presentation of RFP Analysis by Consultant
Presentation of Request for Proposal (RFP) 2016-17 Analysis by consultant, IPS Advisors, for employee medical and dental insurance benefits. (Cook / Consultant)

Documents: IPS PRESENTATION - CITY OF SEABROOK 2016 - RFP ANALYSIS - FINAL.PDF

2. PUBLIC COMMENTS AND ANNOUNCEMENTS

At this time we would like to listen to any member of the audience on any subject matter, whether or not that item is on the agenda. All comments are limited to a maximum of four minutes for each speaker. In accordance with the Open Meetings Act, members may not discuss or take action on any item that has not been posted on the agenda. When your name is called, please come to the podium and state your name and address clearly into the

microphone before making your comments. Thank you.

2.1. Mayor, City Council and/or members of the city staff may make announcements about city/community events. (Council)

3. SPECIFIC PUBLIC HEARINGS

3.1. Specific Public Hearing Seabrook Town Center Overlay District

Public Hearing on proposed Ordinance 2016-16, amending the Seabrook City Code, Appendix A, "Comprehensive Zoning", Article 4, "Special Use Regulations", creating a new Section 4.16 "Seabrook Town Center Overlay District Regulations". (Landis)

AN ORDINANCE AMENDING THE SEABROOK CITY CODE, APPENDIX A, COMPREHENSIVE ZONING, ARTICLE 4, "SPECIAL USE REGULATIONS", CREATING A NEW SECTION 4.16 "SEABROOK TOWN CENTER OVERLAY DISTRICT REGULATIONS", SUCH DISTRICT CONSISTING OF THE AREA LYING WEST OF THE WESTERN EDGE OF STATE HIGHWAY 146 RIGHT-OF-WAY, NORTH OF VERMILLION DRIVE REAR PROPERY LINES, EAST OF ED WHITE ELEMENTARY SCHOOL, SOUTH OF OAK DALE WAY REAR PROPERTY LINES, AND SOUTH OF SEABROOK METHODIST CHURCH, AS FURTHER DEPICTED IN ATTACHMENT A, HEREIN, BY ADDING SITE AND ARCHITECTURAL REGULATIONS FOR THE AREA KNOWN COMMONLY AS "SEABROOK TOWN CENTER", AND AMENDING SECTION 3.15, "COMPREHENSIVE LAND USE MATRIX", ACCORDINGLY BY ADDING "SEABROOK TOWN CENTER OVERLAY DISTRICT" "USES" PERMITTED BY RIGHT AND BY CONDITIONAL USE WITHIN SUCH DISTRICT; RECODIFYING THE CURRENT SECTION 4.16 "TELECOMMUNICATION TOWERS AND ANTENNAE" UNDER A NEW SECTION 4.25 UNDER THE SAME TITLE, TO ALLOW FOR FUTURE EXPANSION OF ARTICLE 4; PROVIDING FOR A PENALTY IN AN AMOUNT NOT TO EXCEED $2000 PER OFFENSE FOR VIOLATION OF ANY PROVISION HEREOF BY INCLUSION INTO THE CODE; REPEALING ALL ORDINANCES OR PARTS OF ORDINANCES INCONSISTENT OR IN CONFLICT HEREWITH; AND PROVIDING FOR SEVERABILITY.

Documents: CITY COUNCIL AGENDA BRIEFING SEABROOK TOWN CENTER OVERLAY DISTRICT 6-21-2016 CITY COUNCIL MEETING.PDF, REPORT TO CC 05-19-2016 SEABROOK TOWN CENTER OVERLAY DISTRICT.PDF, ORD 2016-16 SEABROOK TOWN CENTER OVERLAY DISTRICT ORDINANCE 6-8-2016 SLW CLEAN 061516.PDF, OVERLAY ORDINANCE LANGUAGE-3 ATTACHMENT A WITH UNDERLINES 6-08-2016 SLWR061416.PDF, MATRIX WITH STCOD- DISTRICT MARKUP (2) ATTACHMENT B UNDERLINED 6-08-2016 2.PDF

4. BID AWARDS

4.1. Bid Award to Blue Cross Blue Shield (BCBS)

Consider, discuss, and authorize approval of or take action on Bid Award for Request for Proposal (RFP) 2016-17 to Blue Cross Blue Shield (BCBS) for employee medical insurance benefits, as recommended by consultant, IPS Advisors. (Cook / Consultant)

Documents: AGENDA BRIEFING FORM - BID AWARD HEALTH INSURANCE.PDF, CONTRIBUTIONS - FINAL - HEALTH INSURANCE.PDF, MM05.PDF, MM16.PDF, MMH9.PDF

4.2. Bid Award to Aetna Dental Freedom of Choice

Consider, discuss, and authorize approval of or take action on Bid Award for Request for Proposal (RFP) 2016-17 to Aetna Dental Freedom of Choice for employee dental insurance benefits, as recommended by consultant, IPS Advisors. (Cook / Consultant)

Documents: AGENDA BRIEFING FORM - BID AWARD DENTAL INSURANCE.PDF

4.3. Bid Award and Contract with Statewide Services, Inc.

Consider, discuss, and authorize approval of or take action on Bid Award for Project 2016-03 and authorize execution of a contract with Statewide Services, Inc. for Waterline Improvements at two different locations at Todville Road and East Meyer and at the south side of Red Bluff from Old Highway 146 to the southwest corner of Red Bluff and Bayview Drive, in an amount not to exceed $157,435.00. (Padgett/Chairez)

Documents: AGENDA BRIEFING - BIDAWARD_WATERLINE_PROJECT_2016-03.PDF, RECOMMENDATION LETTER - 2016 WATER LINE.PDF, WATERLINE EXHIBIT.PDF, 2016_03 STATEWIDE FORM 1295.PDF

4.4. Bid Award and Contract with Precise Services, Inc.

Consider, discuss, and authorize approval of or take action on Bid Award for Project 2016-06 and authorize execution of a Contract with Precise Services, Inc., for Paving Improvements on Delabrook Court, in an amount not to exceed $171,681.00. (Padgett/Chairez)

Documents: AGENDA BRIEFING - BIDAWARD_DELABROK_PROJECT_2016-06.PDF, RECOMMENDATION LETTER - DELABROOK COURT PAVING.PDF, DELABROOK EXHIBIT.PDF, PSI 2016_06 FORM 1295.PDF

5. CONSENT AGENDA

Council will discuss, consider and if appropriate, take action on the items listed below.

5.1. Ordinance 2016-15 Charter references

Approve on second reading proposed Ordinance 2016-15. (Hicks)

AN ORDINANCE AMENDING CHAPTER 2 OF THE CODE OF ORDINANCES OF THE CITY OF SEABROOK, ENTITLED "ADMINISTRATION," ARTICLE II, "CITY COUNCIL," DIVISION 2, "RULES OF PROCEDURE," SECTION 2-47(6), "AGENDA; ESTABLISHING," SECTION 2-48(3) AND SECTION 2-48(6)9D), "ORDER OF BUSINESS," SECTION 2-54, "CONFORMANCE WITH THE CITY CHARTER" AND ARTICLE IV, "ORDINANCES," SECTION 2-96, "INTRODUCTION OF ORDINANCES" AND SECTION 2-99, "VOTE ON FINAL PASSAGE" BY UPDATING THE REFERENCES TO SPECIFIC SECTIONS TO CORRESPOND WITH RECENT AMENDMENTS OF THE CITY'S CHARTER; REPEALING ALL ORDINANCE OR PARTS OF ORDINANCES INCONSISTENT OR IN CONFLICT HEREWITH; AND PROVIDING FOR SEVERABILITY; AND PROVIDING FOR AN EFFECTIVE DATE

Documents: ORDINANCE 2016-15 CHARTER REFERENCE UPDATE CS SLW BL (CLEAN) 060216.PDF

5.2. Ordinance 2016-14 No Parking Zones

Approve on second reading proposed Ordinance 2016-14. (Cook)

AN ORDINANCE AMENDING CHAPTER 90 OF THE CODE OF ORDINANCES OF THE CITY OF SEABROOK, ENTITLED "TRAFFIC AND VEHICLES," ARTICLE III, "STOPPING, STANDING, AND PARKING," DIVISION 1, "GENERALLY," TO UPDATE AND FURTHER CLARIFY SECTION 90-61 CURRENTLY ENTITLED, "PARKING PROHIBITED SIGNS;" BY ADDING NEW PROVISIONS AND REVISING TITLE TO "NO PARKING - DESIGNATION GENERALLY;" BY ADDING A NEW SECTION 90-80, "SCHEDULE I - NO PARKING ZONES"; PROVIDING FOR A PENALTY IN AN AMOUNT OF NOT MORE THAN TWO HUNDRED DOLLARS ($200.00) FOR VIOLATION OF ANY PROVISIONS HEREOF BY INCLUSION INTO THE CODE; REPEALING ALL ORDINANCES OR PARTS OF ORDINANCES INCONSISTENT OR IN CONFLICT HEREWITH; PROVIDING FOR SEVERABILITY; AND PROVIDING FOR NOTICE.

Documents: ORD NO 2016-14 PARKING CLEAN UP 053106 CM CA 060316 CLEAN (NEW TABLE 90-8)F.PDF

5.3. Seabrook Economic Development Corporation Administrative Services Agreement

Approve the Administrative Services Agreement between the City of Seabrook and the Seabrook Economic Development Corporation for Fiscal Year 2016/17. (Cook)

Documents: EDC ADMIN SVC AGR.PDF

5.4. CLEMC Monthly Report

Approve the Clear Lake Emergency Medical Corps (CLEMC) monthly report for May 2016. (Hunter)

Documents: CLEMC REPORT MAY 2016.PDF

5.5. Fire Department Monthly Report

Approve the Seabrook Volunteer Fire Department (SVFD) monthly report for May 2016. (Gutaker)

Documents: SVFD MAY 2016 STATUS REPORT FOR CITY OF SEABROOK.PDF

5.6. Police Department Monthly Report

Approve the Seabrook Police Department monthly report for May 2016. (Wright)

Documents: PD STATS MAY 2016.PDF

5.7. Building Department Monthly Report

Approve the Seabrook Building Department monthly report for May 2016. (Landis)

Documents: BUILDING DEPARTMENT REPORT MAY.PDF

5.8. Excused Absence

Approve an excused absence for Gary Johnson and Glenna Adovasio for the June 7, 2016 special and regular City Council meetings. (Hicks)

6. NEW BUSINESS

Council will discuss, consider and if appropriate, take action on the items

listed below.

6.1. Ordinance 2016-16 Overlay District Amendment

Discuss, consider, and authorize approval of or take action on first reading of proposed Ordinance 2016-16, amending the Seabrook City Code, Appendix A, "Comprehensive Zoning", Article 4, "Special Use Regulations", creating a new Section 4.16 "Seabrook Town Center Overlay District Regulations". (Landis)

AN ORDINANCE AMENDING THE SEABROOK CITY CODE, APPENDIX A, COMPREHENSIVE ZONING, ARTICLE 4, "SPECIAL USE REGULATIONS", CREATING A NEW SECTION 4.16 "SEABROOK TOWN CENTER OVERLAY DISTRICT REGULATIONS", SUCH DISTRICT CONSISTING OF THE AREA LYING WEST OF THE WESTERN EDGE OF STATE HIGHWAY 146 RIGHT-OF-WAY, NORTH OF VERMILLION DRIVE REAR PROPERY LINES, EAST OF ED WHITE ELEMENTARY SCHOOL, SOUTH OF OAK DALE WAY REAR PROPERTY LINES, AND SOUTH OF SEABROOK METHODIST CHURCH, AS FURTHER DEPICTED IN ATTACHMENT A, HEREIN, BY ADDING SITE AND ARCHITECTURAL REGULATIONS FOR THE AREA KNOWN COMMONLY AS "SEABROOK TOWN CENTER", AND AMENDING SECTION 3.15, "COMPREHENSIVE LAND USE MATRIX", ACCORDINGLY BY ADDING "SEABROOK TOWN CENTER OVERLAY DISTRICT" "USES" PERMITTED BY RIGHT AND BY CONDITIONAL USE WITHIN SUCH DISTRICT; RECODIFYING THE CURRENT SECTION 4.16 "TELECOMMUNICATION TOWERS AND ANTENNAE" UNDER A NEW SECTION 4.25 UNDER THE SAME TITLE, TO ALLOW FOR FUTURE EXPANSION OF ARTICLE 4; PROVIDING FOR A PENALTY IN AN AMOUNT NOT TO EXCEED $2000 PER OFFENSE FOR VIOLATION OF ANY PROVISION HEREOF BY INCLUSION INTO THE CODE; REPEALING ALL ORDINANCES OR PARTS OF ORDINANCES INCONSISTENT OR IN CONFLICT HEREWITH; AND PROVIDING FOR SEVERABILITY.

Documents: CITY COUNCIL AGENDA BRIEFING SEABROOK TOWN CENTER OVERLAY DISTRICT 6-21-2016 CITY COUNCIL MEETING.PDF, REPORT TO CC 05-19-2016 SEABROOK TOWN CENTER OVERLAY DISTRICT.PDF, ORD 2016-16 SEABROOK TOWN CENTER OVERLAY DISTRICT ORDINANCE 6-8-2016 SLW CLEAN 061516.PDF, OVERLAY ORDINANCE LANGUAGE-3 ATTACHMENT A WITH UNDERLINES 6-08-2016 SLWR061416.PDF, MATRIX WITH STCOD- DISTRICT MARKUP (2) ATTACHMENT B UNDERLINED 6-08-2016 2.PDF

7. ROUTINE BUSINESS

Council will discuss, consider and if appropriate, take action on the items listed below.

7.1. Reports

Reports and announcements concerning items of community interest. No discussion or action will be taken by Council.

Council Liaisons:

a. Bay Area Houston Convention & Visitors Bureau
b. Bay Area Houston Economic Partnership
c. Bay Area Transportation Partnership
d. Clear Lake Emergency Medical Corps
e. Economic Alliance, Port Region
f. Galveston Bay Foundation
g. Hotel Tax Liaison Committee
h. Houston-Galveston Area Council

7.2. Approve the Action Items Checklist which is attached and made a part of this Agenda.

Documents: 041116 ACTION ITEMS CHECKLIST.PDF

7.3. Establish future meeting dates and agenda items

Documents: JUNE CALENDAR.PDF, JULY CALENDAR.PDF

THE CITY COUNCIL RESERVES THE RIGHT TO HEAR ANY OF THE ABOVE DESCRIBED AGENDA ITEMS THAT QUALIFY FOR AN EXECUTIVE SESSION IN AN EXECUTIVE SESSION BY PUBLICLY ANNOUNCING THE APPLICABLE SECTION NUMBER OF THE OPEN MEETINGS ACT, (CHAPTER 551 OF THE TEXAS GOVERNMENT CODE) THAT JUSTIFIES EXECUTIVE SESSION TREATMENT.

I certify that this notice was posted on the bulletin board on or before Friday, June 17, 2016 no later than 5:00 p.m. and that this notice will remain posted until the meeting has ended.

Robin Hicks, TRMC
City Secretary

Where Experience and Independence Matter

Corporate Benefits Consulting
Insurance Planning Services
Retirement Plan Consulting

City of Seabrook
RFP Analysis and Plan Options

Brent A. Weegar, MBA
Principal

Brian Wilson
Account Manager

June 10, 2016

Table of Contents

- Medical RFP Results – Best and Final
- Dental RFP Results – Best and Final
- Vendor Selection Matrix
- Recommendations

ips ADVISORS

Medical RFP Results – Best and Final

CITY OF SEABROOK

MEDICAL RATES - BEST AND FINAL

MEDICAL BENEFITS				BlueCross BlueShield	BlueCross BlueShield	BlueCross BlueShield	BlueCross BlueShield	BlueCross BlueShield	BlueCross BlueShield	BlueCross BlueShield	BlueCross BlueShield	BlueCross BlueShield	Cigna	Cigna	Cigna
				RM03	RM14	RMH9 HSA	MM03	MM14	MMH9 HSA	MM03	MM14	MMH9 HSA	Buy Up	Core	HSA
FINANCIALS				Current	Current	Current	Renewal	Renewal	Renewal	Renegotiated Renewal	Renegotiated Renewal	Renegotiated Renewal	Proposed	Proposed	Proposed
Employee Only	45	1	7	$533.62	$481.22	$363.99	$748.14	$675.63	$500.12	$669.69	$604.89	$448.07	$634.81	$579.03	$513.26
Employee & Spouse	3	0	1	$1,338.32	$1,206.90	$912.90	$1,876.32	$1,694.49	$1,254.32	$1,679.59	$1,517.07	$1,123.78	$1,592.09	$1,452.20	$1,295.04
Employee & Child(ren)	12	0	2	$983.11	$886.57	$670.61	$1,378.32	$1,244.74	$921.42	$1,233.80	$1,114.42	$825.52	$1,169.31	$1,066.57	$949.77
Employee & Family	8	1	1	$1,711.64	$1,543.57	$1,167.56	$2,399.72	$2,167.17	$1,604.23	$2,148.11	$1,940.27	$1,437.27	$2,036.46	$1,857.52	$1,657.93
	68	2	11												
Monthly Premium				**$53,518**	**$2,025**	**$5,970**	**$75,033**	**$2,843**	**$8,202**	**$67,165**	**$2,545**	**$7,349**	**$63,666**	**$2,437**	**$8,445**
Annual Premium				**$642,220**	**$24,298**	**$71,635**	**$900,394**	**$34,114**	**$98,427**	**$805,984**	**$30,542**	**$88,183**	**$763,993**	**$29,239**	**$101,344**
Combined Annual				**$738,153**			**$1,032,935**			**$924,708**			**$894,576.00**		
$ Change from Current				**N/A**			**$294,782**			**$186,556**			**$156,423**		
% Change from Current				**N/A**			**39.94%**			**25.27%**			**21.19%**		

Note: This is a brief summary and not intended to be a contract. Final rates are based on final medical disclosure and underwriting approval.

CITY OF SEABROOK

CURRENT MEDICAL BENEFITS - PLAN COMPARISON

Original Cigna Quote - These plans can not be paired with KelseyCare. See Cigna Option 1 for Cigna alternates that can be paired with KelseyCare.

MEDICAL BENEFITS	BlueCross BlueShield	BlueCross BlueShield	BlueCross BlueShield	Cigna	Cigna	Cigna
	RM03	RM14	RMH9 HSA	Buy Up	Core	HSA
	Current	Current	Current	Proposed	Proposed	Proposed
Deductible						
In-Network	$500 Ind. /$1,500 Fam.	$1,500 Ind. /$4,500 Fam.	$3,500 Ind./ $7,000 Fam.	$500 Ind. /$1,500 Fam.	$1,500 Ind. /$4,500 Fam.	$3,500 Ind./ $7,000 Fam.
Non-Network	$1,000 Ind. / $3,000 Fam.	$3,000 Ind. / $9,000 Fam.	$7,000 Ind./ $14,000 Fam.	$1,000 Ind. / $3,000 Fam.	$3,000 Ind. / $9,000 Fam.	$7,000 Ind./ $14,000 Fam.
Out Of Pocket Max	Excludes Deductible	Excludes Deductible	Excludes Deductible	Excludes Deductible	Excludes Deductible	Excludes Deductible
In-Network	$2,000 Ind. / $6,000 Fam.	$3,000 Ind. / $5,700 Fam.	$0 Ind. / $0 Fam.	$2,000 Ind. / $6,000 Fam.	$3,000 Ind. / $5,700 Fam.	$0 Ind. / $0 Fam.
Non-Network	$4,000 Ind. / $12,000 Fam.	$6,000 Ind. / $18,000 Fam.	$7,000 Ind./ $14,000 Fam.	$4,000 Ind. / $12,000 Fam.	$6,000 Ind. / $18,000 Fam.	$7,000 Ind./ $14,000 Fam.
Coinsurance						
In-Network	20%	20%	0%	20%	20%	0%
Non-Network	40%	40%	30%	40%	40%	30%
Lifetime Max	Unlimited	Unlimited	Unlimited	Unlimited	Unlimited	Unlimited
Emergency Room						
In-Network	$100 Copay + 20%	$100 Copay + 20%	Ded./ 0%	$100 Copay + 20%	$100 Copay + 20%	Ded./ 0%
Non-Network	$100 Copay + 20%	$100 Copay + 20%	Ded./ 0%	$100 Copay + 20%	$100 Copay + 20%	Ded./ 0%
Maternity						
Physician Office Visit						
In-Network	$15 Copay	$20 Copay	Ded./ 0%	$15 Copay	$20 Copay	Ded./ 0%
Non-Network	Ded./ 30%	Ded./ 30%	Ded./ 30%	Ded./ 30%	Ded./ 30%	Ded./ 30%
Specialist Office Visit						
In-Network	$15 Copay	$20 Copay	Ded./ 0%	$15 Copay	$20 Copay	Ded./ 0%
Non-Network	Ded./ 30%	Ded./ 30%	Ded./ 30%	Ded./ 30%	Ded./ 30%	Ded./ 30%
Preventive Care						
In-Network	100% Covered	100% Covered	100% Covered	100% Covered	100% Covered	100% Covered
Non-Network	Ded./ 40%	Ded./ 40%	Ded./ 30%	Ded./ 40%	Ded./ 40%	Ded./ 30%
Urgent Care						
In-Network	$40 Copay	$45 Copay	Ded./ 0%	$40 Copay	$45 Copay	Ded./ 0%
Non-Network	Ded./ 30%/ 40%	Ded./ 30%/ 40%	Ded./ 30%	Ded./ 30%	Ded./ 30%	Ded./ 30%
Diagnostic Lab & X-Ray						
In-Network	$0 Lab/$0 X-ray/Ded./20% CT/PET/MRI	$0 Lab/$0 X-ray/Ded./20% CT/PET/MRI	Ded./ 0%	Lab/Radiology $15 OV Copay Advanced Imaging: 20% Independent Lab 100%	Lab/Radiology $20 OV Copay Advanced Imaging: 20% Independent Lab 100%	Ded./ 0%
Non-Network	Ded./ 40%	Ded./ 40%	Ded./ 30%	Ded./ 40%	Ded./ 30%	Ded./ 30%
In-Patient Hospital						
In-Network	Ded./ 20%	Ded./ 20%	Ded./ 0%	Ded./ 20%	Ded./ 20%	Ded./ 0%
Non-Network	Ded./ 40%	Ded./ 40%	Ded./ 30%	Ded./ 40%	Ded./ 40%	Ded./ 30%
In-patient Substance						
In-Network	Ded./ 20%	Ded./ 20%	Ded./ 0%	Ded./ 20%	Ded./ 20%	Ded./ 0%
Non-Network	Ded./ 40%	Ded./ 40%	Ded./ 30%	Ded./ 40%	Ded./ 40%	Ded./ 30%
Out-patient Substance						
In Network	$25 Copay	$20 Copay	Ded./ 0%	$15 Copay	$20 Copay	Ded./ 0%
Non-Network	Ded./ 40%	Ded./ 40%	Ded./ 30%	Ded./ 40%	Ded./ 40%	Ded./ 30%
In-patient Mental Health						
In-Network	Ded./ 20%	Ded./ 20%	Ded./ 0%	Ded./ 20%	Ded./ 20%	Ded./ 0%
Non-Network	Ded./ 40%	Ded./ 40%	Ded./ 30%	Ded./ 40%	Ded./ 40%	Ded./ 30%
Out-patient Mental Health						
In-Network	$25 Copay	$20 Copay	Ded./ 0%	$15 Copay	$20 Copay	Ded./ 0%
Non-Network	Ded./ 40%	Ded./ 40%	Ded./ 30%	Ded./ 40%	Ded./ 40%	Ded./ 30%
Prescriptions						
Network Retail Pharmacy	$15/$30/$45	$15/$30/$45	Ded./ 0%	$15/$30/$45	$15/$30/$45	Ded./ 0%
Mail Order	x 3	x 3	Ded./ 0%	x 2.5	x 2.5	Ded./ 0%

Note: This is a brief summary and not intended to be a contract.

CITY OF SEABROOK

MEDICAL RATES - BCBS ALTERNATES

MEDICAL BENEFITS				BlueCross BlueShield	BlueCross BlueShield	BlueCross BlueShield	BlueCross BlueShield	BlueCross Blue Shield	BlueCross BlueShield	BlueCross BlueShield	BlueCross Blue Shield	BlueCross BlueShield	BlueCross BlueShield	BlueCross BlueShield	BlueCross BlueShield
				RM03	RM14	RMH9 HSA	RM03	RM14	RMH9 HSA	MM05	MM16	RMH9/MMH9 HSA	MM07	MM18	RMH9/MMH9 HSA
FINANCIALS				Current	Current	Current	Renegotiated Renewal	Renegotiated Renewal	Renegotiated Renewal	Option 1	Option 1	Option 1	Option 2	Option 2	Option 2
Employee Only	45	1	7	$533.62	$481.22	$363.99	$669.69	$604.89	$448.07	$646.02	$583.14	$448.07	$630.97	$573.93	$448.07
Employee & Spouse	3	0	1	$1,338.32	$1,206.90	$912.90	$1,679.59	$1,517.07	$1,123.78	$1,620.21	$1,462.48	$1,123.78	$1,582.47	$1,439.42	$1,123.78
Employee & Child(ren)	12	0	2	$983.11	$886.57	$670.61	$1,233.80	$1,114.42	$825.52	$1,190.19	$1,074.48	$825.52	$1,162.46	$1,057.37	$825.52
Employee & Family	8	1	1	$1,711.64	$1,543.57	$1,167.56	$2,148.11	$1,940.27	$1,437.27	$2,072.17	$1,870.43	$1,437.27	$2,023.88	$1,840.92	$1,437.27
	68	2	11												
Monthly Premium				**$53,518**	**$2,025**	**$5,970**	**$67,165**	**$2,545**	**$7,349**	**$64,791**	**$2,454**	**$7,349**	**$63,282**	**$2,415**	**$7,349**
Annual Premium				**$642,220**	**$24,298**	**$71,635**	**$805,984**	**$30,542**	**$88,183**	**$777,494**	**$29,443**	**$88,183**	**$759,379.44**	**$28,978**	**$88,182.96**
Combined Annual				**$738,153**			**$924,708**			**$895,119.84**			**$876,540.60**		
$ Change from Current				**N/A**			**$186,556**			**$156,967**			**$138,388**		
% Change from Current				**N/A**			**25.27%**			**21.26%**			**18.75%**		

Note: This is a brief summary and not intended to be a contract. Final rates are based on final medical disclosure and underwriting approval.

CITY OF SEABROOK

MEDICAL BENEFITS - BCBS ALTERNATES

	Current			BCBS - Option 1			BCBS - Option 2		
MEDICAL BENEFITS	**BlueCross BlueShield**	**BlueCross BlueShield**	**BlueCross BlueShield**	**BlueCross BlueShield**	**BlueCross BlueShield**	**BlueCross BlueShield**	**BlueCross BlueShield**	**BlueCross BlueShield**	**BlueCross BlueShield**
	RM03/MM03	**RM14/MM14**	**RMH9/MMH9 HSA**	**MM05**	**MM16**	**RMH9/MMH9 HSA**	**MM07**	**MM18**	**RMH9/MMH9 HSA**
	Current	**Current**	**Current**	**Proposed**	**Proposed**	**Current**	**Proposed**	**Proposed**	**Current**
Deductible									
In-Network	$500 Ind. /$1,500 Fam.	$1,500 Ind. /$4,500 Fam.	$3,500 Ind./ $7,000 Fam.	$750 Ind. /$2,250 Fam.	$1,500 Ind. /$4,500 Fam.	$3,500 Ind./ $7,000 Fam.	$1,000 Ind. /$3,000 Fam.	$2,000 Ind. /$6,000 Fam.	$3,500 Ind./ $7,000 Fam.
Non-Network	$1,000 Ind. / $3,000 Fam.	$3,000 Ind. / $9,000 Fam.	$7,000 Ind./ $14,000 Fam.	$1,500 Ind. / $4,500 Fam.	$3,000 Ind. / $9,000 Fam.	$7,000 Ind./ $14,000 Fam.	$2,000 Ind. / $6,000 Fam.	$4,000 Ind. / $12,000 Fam.	$7,000 Ind./ $14,000 Fam.
Out Of Pocket Max	Excludes Deductible	Excludes Deductible	Excludes Deductible	Excludes Deductible	Excludes Deductible	Excludes Deductible	Excludes Deductible	Excludes Deductible	Excludes Deductible
In-Network	$2,000 Ind. / $6,000 Fam.	$3,000 Ind. / $5,700 Fam.	$0 Ind. / $0 Fam.	$3,000 Ind. / $7,950 Fam.	$3,000 Ind. / $5,700 Fam.	$0 Ind. / $0 Fam.	$2,500 Ind. / $7,200 Fam.	$3,000 Ind. / $4,200 Fam.	$0 Ind. / $0 Fam.
Non-Network	$4,000 Ind. / $12,000 Fam.	$6,000 Ind. / $18,000 Fam.	$7,000 Ind./ $14,000 Fam.	$6,000 Ind. / $18,000 Fam.	$6,000 Ind. / $18,000 Fam.	$7,000 Ind./ $14,000 Fam.	$5,000 Ind. / $15,000 Fam.	$6,000 Ind. / $18,000 Fam.	$7,000 Ind./ $14,000 Fam.
Coinsurance									
In-Network	20%	20%	0%	20%	20%	0%	20%	20%	0%
Non-Network	40%	40%	30%	40%	40%	30%	40%	40%	30%
Lifetime Max	Unlimited	Unlimited	Unlimited	Unlimited	Unlimited	Unlimited	Unlimited	Unlimited	Unlimited
Emergency Room									
In-Network	$100 Copay + 20%	$100 Copay + 20%	Ded./ 0%	$100 Copay + 20%	$100 Copay + 20%	Ded./ 0%	$100 Copay + 20%	$100 Copay + 20%	Ded./ 0%
Non-Network	$100 Copay + 20%	$100 Copay + 20%	Ded./ 0%	$100 Copay + 20%	$100 Copay + 20%	Ded./ 0%	$100 Copay + 20%	$100 Copay + 20%	Ded./ 0%
Maternity									
Physician Office Visit									
In-Network	$15 Copay	$20 Copay	Ded./ 0%	$20 Copay	$30 Copay	Ded./ 0%	$20 Copay	$20 Copay	Ded./ 0%
Non-Network	Ded./ 30%	Ded./ 30%	Ded./ 30%	Ded./ 30%	Ded./ 30%	Ded./ 30%	Ded./ 30%	Ded./ 30%	Ded./ 30%
Specialist Office Visit									
In-Network	$15 Copay	$20 Copay	Ded./ 0%	$20 Copay	$30 Copay	Ded./ 0%	$20 Copay	$20 Copay	Ded./ 0%
Non-Network	Ded./ 30%	Ded./ 30%	Ded./ 30%	Ded./ 30%	Ded./ 30%	Ded./ 30%	Ded./ 30%	Ded./ 30%	Ded./ 30%
Preventive Care									
In-Network	100% Covered	100% Covered	100% Covered	100% Covered	100% Covered	100% Covered	100% Covered	100% Covered	100% Covered
Non-Network	Ded./ 40%	Ded./ 40%	Ded./ 30%	Ded./ 40%	Ded./ 40%	Ded./ 30%	Ded./ 40%	Ded./ 40%	Ded./ 30%
Urgent Care									
In-Network	$40 Copay	$45 Copay	Ded./ 0%	$45 Copay	$55 Copay	Ded./ 0%	$45 Copay	$45 Copay	Ded./ 0%
Non-Network	Ded./ 30%/ 40%	Ded./ 30%/ 40%	Ded./ 30%	Ded./ 30%/ 40%	Ded./ 30%/ 40%	Ded./ 30%	Ded./ 30%/ 40%	Ded./ 30%/ 40%	Ded./ 30%
Diagnostic Lab & X-Ray									
In-Network	$0 Lab/$0 X-ray/Ded./20% CT/PET/MRI	$0 Lab/$0 X-ray/Ded./20% CT/PET/MRI	Ded./ 0%	$0 Lab/$0 X-ray/Ded./20% CT/PET/MRI	$0 Lab/$0 X-ray/Ded./20% CT/PET/MRI	Ded./ 0%	$0 Lab/$0 X-ray/Ded./20% CT/PET/MRI	$0 Lab/$0 X-ray/Ded./20% CT/PET/MRI	Ded./ 0%
Non-Network	Ded./ 40%	Ded./ 40%	Ded./ 30%	Ded./ 40%	Ded./ 40%	Ded./ 30%	Ded./ 40%	Ded./ 40%	Ded./ 30%
In-Patient Hospital									
In-Network	Ded./ 20%	Ded./ 20%	Ded./ 0%	Ded./ 20%	Ded./ 20%	Ded./ 0%	Ded./ 20%	Ded./ 20%	Ded./ 0%
Non-Network	Ded./ 40%	Ded./ 40%	Ded./ 30%	Ded./ 40%	Ded./ 40%	Ded./ 30%	Ded./ 40%	Ded./ 40%	Ded./ 30%
In-patient Substance									
In-Network	Ded./ 20%	Ded./ 20%	Ded./ 0%	Ded./ 20%	Ded./ 20%	Ded./ 0%	Ded./ 20%	Ded./ 20%	Ded./ 0%
Non-Network	Ded./ 40%	Ded./ 40%	Ded./ 30%	Ded./ 40%	Ded./ 40%	Ded./ 30%	Ded./ 40%	Ded./ 40%	Ded./ 30%
Out-patient Substance									
In Network	$25 Copay	$20 Copay	Ded./ 0%	$20 Copay	$30 Copay	Ded./ 0%	$20 Copay	$20 Copay	Ded./ 0%
Non-Network	Ded./ 40%	Ded./ 40%	Ded./ 30%	Ded./ 40%	Ded./ 40%	Ded./ 30%	Ded./ 40%	Ded./ 40%	Ded./ 30%
In-patient Mental Health									
In-Network	Ded./ 20%	Ded./ 20%	Ded./ 0%	Ded./ 20%	Ded./ 20%	Ded./ 0%	Ded./ 20%	Ded./ 20%	Ded./ 0%
Non-Network	Ded./ 40%	Ded./ 40%	Ded./ 30%	Ded./ 40%	Ded./ 40%	Ded./ 30%	Ded./ 40%	Ded./ 40%	Ded./ 30%
Out-patient Mental Health									
In-Network	$25 Copay	$20 Copay	Ded./ 0%	$20 Copay	$30 Copay	Ded./ 0%	$20 Copay	$20 Copay	Ded./ 0%
Non-Network	Ded./ 40%	Ded./ 40%	Ded./ 30%	Ded./ 40%	Ded./ 40%	Ded./ 30%	Ded./ 40%	Ded./ 40%	Ded./ 30%
Prescriptions				Rx Out of Pocket $1,000 Ind./$3,000 Fam.	Rx Out of Pocket $1,000 Ind./$3,000 Fam.		Rx Out of Pocket $1,000 Ind./$3,000 Fam.	Rx Out of Pocket $1,000 Ind./$3,000 Fam.	
Network Retail Pharmacy	$15/$30/$45	$15/$30/$45	Ded./ 0%	$15/$30/$45	$20/$35/$50	Ded./ 0%	$15/$30/$45	$15/$40/$55	Ded./ 0%
Mail Order	x 3	x 3	Ded./ 0%	x 3	x 3	Ded./ 0%	x 3	x 3	Ded./ 0%

Note: This is a brief summary and not intended to be a contract.

CITY OF SEABROOK

MEDICAL RATES - CIGNA ALTERNATES

MEDICAL BENEFITS				BlueCross BlueShield	BlueCross BlueShield	BlueCross BlueShield	Cigna	Cigna	Cigna	Cigna	Cigna	Cigna	Cigna	Cigna	Cigna	Cigna	Cigna
				RM03	RM14	RMH9 HSA	Buy Up	Core	HSA	Buy Up	Core	HSA	KelseyCare 3K	Buy Up 1K	Core 2K	HSA	KelseyCare 3K
FINANCIALS				Current	Current	Current	Original Renegotiated	Original Renegotiated	Original Renegotiated	Option 1	Option 1	Option 1	Option 1	Option 2	Option 2	Option 2	Option 2
Employee Only	45	1	7	$533.62	$481.22	$363.99	$634.81	$579.03	$513.26	$637.43	$582.96	$517.42	$562.25	$619.23	$577.69	$517.42	$562.25
Employee & Spouse	3	0	1	$1,338.32	$1,206.90	$912.90	$1,592.09	$1,452.20	$1,295.04	$1,598.69	$1,462.09	$1,304.75	$1,410.12	$1,553.03	$1,448.85	$1,304.75	$1,410.12
Employee & Child(ren)	12	0	2	$983.11	$886.57	$670.61	$1,169.31	$1,066.57	$949.77	$1,174.16	$1,073.83	$957.03	$1,035.66	$1,140.62	$1,064.11	$957.03	$1,035.66
Employee & Family	8	1	1	$1,711.64	$1,543.57	$1,167.56	$2,036.46	$1,857.52	$1,657.93	$2,044.90	$1,870.16	$1,670.22	$1,803.69	$1,986.49	$1,853.24	$1,670.22	$1,803.69
	68	2	11										KelseyCare is 9.2% Below Buy Up Plan				KelseyCare is 9.2% Below Buy Up Plan
Monthly Premium				**$53,518**	**$2,025**	**$5,970**	**$63,666**	**$2,437**	**$8,445**	**$63,930**	**$2,453**	**$8,511**		**$62,104**	**$2,431**	**$8,511**	
Annual Premium				**$642,220**	**$24,298**	**$71,635**	**$763,993**	**$29,239**	**$101,344**	**$767,154**	**$29,437**	**$102,132**		**$745,246**	**$29,171**	**$102,132**	
Combined Annual				**$738,153**			**$894,576**			**$898,723.56**				**$876,548.40**			
$ Change from Current				**N/A**			**$156,423**			**$160,571**				**$138,396**			
% Change from Current				**N/A**			**21.19%**			**21.75%**				**18.75%**			

Note: This is a brief summary and not intended to be a contract. Final rates are based on final medical disclosure and underwriting approval.

CITY OF SEABROOK

MEDICAL BENEFITS - CIGNA ALTERNATES

	Current			Cigna - Option 1				Cigna - Option 2			
MEDICAL BENEFITS	**BlueCross BlueShield**	**BlueCross BlueShield**	**BlueCross BlueShield**	**Cigna**	**Cigna**	**Cigna**	**Cigna**	**Cigna**	**Cigna**	**Cigna**	**Cigna**
	RM03	**RM14**	**RMH9 HSA**	**Buy Up 500**	**Core 1500**	**HSA**	**KelseyCare 3K**	**Buy Up 1K**	**Core 2K**	**HSA**	**KelseyCare 3K**
	Current	**Current**	**Current**	**Option**	**Option**	**Option**	**New Option**	**Option**	**Option**	**Option**	**New Option**
Deductible											
In-Network	$500 Ind. /$1,500 Fam.	$1,500 Ind. /$4,500 Fam.	$3,500 Ind./ $7,000 Fam.	$500 Ind. /$1,500 Fam.	$1,500 Ind. /$4,500 Fam.	$3,500 Ind./ $7,000 Fam.	N/A	$1,000 Ind. /$2,000 Fam.	$2,000 Ind. /$4,000 Fam.	$3,500 Ind./ $7,000 Fam.	N/A
Non-Network	$1,000 Ind. / $3,000 Fam.	$3,000 Ind. / $9,000 Fam.	$7,000 Ind./ $14,000 Fam.	$1,000 Ind. / $3,000 Fam.	$3,000 Ind. / $9,000 Fam.	$7,000 Ind./ $14,000 Fam.	N/A	$5,000 Ind. / $10,000 Fam.	$5,000 Ind. / $10,000 Fam.	$7,000 Ind./ $14,000 Fam.	N/A
Out Of Pocket Max	Excludes Deductible	Excludes Deductible	Excludes Deductible	Excludes Deductible	Excludes Deductible	Excludes Deductible		Excludes Deductible	Excludes Deductible	Excludes Deductible	
In-Network	$2,000 Ind. / $6,000 Fam.	$3,000 Ind. / $5,700 Fam.	$0 Ind. / $0 Fam.	$2,000 Ind. / $6,000 Fam.	$3,000 Ind. / $5,700 Fam.	$0 Ind. / $0 Fam.	$3,000 Ind. / $6,000 Fam.	$3,000 Ind. / $6,000 Fam.	$4,000 Ind. / $6,000 Fam.	$0 Ind. / $0 Fam.	$3,000 Ind. / $6,000 Fam.
Non-Network	$4,000 Ind. / $12,000 Fam.	$6,000 Ind. / $18,000 Fam.	$7,000 Ind./ $14,000 Fam.	$4,000 Ind. / $12,000 Fam.	$6,000 Ind. / $18,000 Fam.	$7,000 Ind./ $14,000 Fam.	N/A	$5,000 Ind. / $10,000 Fam.	$5,000 Ind. / $10,000 Fam.	$7,000 Ind./ $14,000 Fam.	N/A
Coinsurance											
In-Network	20%	20%	0%	20%	20%	0%	10%	20%	20%	0%	10%
Non-Network	40%	40%	30%	40%	40%	30%	N/A	50%	50%	30%	N/A
Lifetime Max	Unlimited	Unlimited	Unlimited	Unlimited	Unlimited	Unlimited	Unlimited	Unlimited	Unlimited	Unlimited	Unlimited
Emergency Room											
In-Network	$100 Copay + 20%	$100 Copay + 20%	Ded./ 0%	$100 Copay + 20%	$100 Copay + 20%	Ded./ 0%	$200 Copay	$250 Copay + 20%	$250 Copay + 20%	Ded./ 0%	$200 Copay
Non-Network	$100 Copay + 20%	$100 Copay + 20%	Ded./ 0%	$100 Copay + 20%	$100 Copay + 20%	Ded./ 0%	N/A	$200 Copay + 20%	$250 Copay + 20%	Ded./ 0%	N/A
Maternity											
Physician Office Visit											
In-Network	$15 Copay	$20 Copay	Ded./ 0%	$15 Copay	$20 Copay	Ded./ 0%	$20 Copay	$25 Copay	$30 Copay	Ded./ 0%	$20 Copay
Non-Network	Ded./ 30%	Ded./ 30%	Ded./ 30%	Ded./ 40%	Ded./ 40%	Ded./ 30%	N/A	Ded./ 50%	Ded./ 50%	Ded./ 30%	N/A
Specialist Office Visit											
In-Network	$15 Copay	$20 Copay	Ded./ 0%	$15 Copay	$20 Copay	Ded./ 0%	$40 Copay	$50 Copay	$60 Copay	Ded./ 0%	$40 Copay
Non-Network	Ded./ 30%	Ded./ 30%	Ded./ 30%	Ded./ 40%	Ded./ 40%	Ded./ 30%	N/A	Ded./ 50%	Ded./ 50%	Ded./ 30%	N/A
Preventive Care											
In-Network	100% Covered	100% Covered	100% Covered	100% Covered	100% Covered	100% Covered	100% Covered	100% Covered	100% Covered	100% Covered	100% Covered
Non-Network	Ded./ 40%	Ded./ 40%	Ded./ 30%	Ded./ 40%	Ded./ 40%	Ded./ 30%	N/A	Ded./ 50%	Ded./ 50%	Ded./ 30%	N/A
Urgent Care											
In-Network	$40 Copay	$45 Copay	Ded./ 0%	$40 Copay	$45 Copay	Ded./ 0%	$25 Copay	$75 Copay	$75 Copay	Ded./ 0%	$25 Copay
Non-Network	Ded./ 30%/ 40%	Ded./ 30%/ 40%	Ded./ 30%	Ded./ 40%	Ded./ 40%	Ded./ 30%	N/A	Ded./ 50%	Ded./ 50%	Ded./ 30%	N/A
Diagnostic Lab & X-Ray											
In-Network	$0 Lab/$0 X-ray/Ded./20% CT/PET/MRI	$0 Lab/$0 X-ray/Ded./20% CT/PET/MRI	Ded./ 0%	Lab/Radiology 100% OP Lab/Radiology 100% Independent Lab 100%	Lab/Radiology 100% OP Lab/Radiology 100% Independent Lab 100%	Ded./ 0%	Lab/Radiology $200 Copay OP Lab/Radiology Ded./ 10% Independent Lab Ded./ 10%	Lab/Radiology $25 OV Copay OP Lab/Radiology 100% Independent Lab 100%	Lab/Radiology $30 OV Copay OP Lab/Radiology 100% Independent Lab 100%	Ded./ 0%	Lab/Radiology $200 Copay OP Lab/Radiology Ded./ 10% Independent Lab Ded./ 10%
Non-Network	Ded./ 40%	Ded./ 40%	Ded./ 30%	Ded./ 40%	Ded./ 40%	Ded./ 30%	N/A	Ded./ 50%	Ded./ 50%	Ded./ 30%	N/A
In-Patient Hospital											
In-Network	Ded./ 20%	Ded./ 20%	Ded./ 0%	Ded./ 20%	Ded./ 20%	Ded./ 0%	10%	Ded./ 20%	Ded./ 20%	Ded./ 0%	10%
Non-Network	Ded./ 40%	Ded./ 40%	Ded./ 30%	Ded./ 40%	Ded./ 40%	Ded./ 30%	N/A	Ded./ 50%	Ded./ 50%	Ded./ 30%	N/A
In-patient Substance											
In-Network	Ded./ 20%	Ded./ 20%	Ded./ 0%	Ded./ 20%	Ded./ 20%	Ded./ 0%	10%	Ded./ 20%	Ded./ 20%	Ded./ 0%	10%
Non-Network	Ded./ 40%	Ded./ 40%	Ded./ 30%	Ded./ 40%	Ded./ 40%	Ded./ 30%	N/A	Ded./ 50%	Ded./ 50%	Ded./ 30%	N/A
Out-patient Substance											
In Network	$25 Copay	$20 Copay	Ded./ 0%	$15 Copay	$20 Copay	Ded./ 0%	$20 Copay	$25 Copay	$30 Copay	Ded./ 0%	$20 Copay
Non-Network	Ded./ 40%	Ded./ 40%	Ded./ 30%	Ded./ 40%	Ded./ 40%	Ded./ 30%	N/A	Ded./ 40%	Ded./ 50%	Ded./ 30%	N/A
In-patient Mental Health											
In-Network	Ded./ 20%	Ded./ 20%	Ded./ 0%	Ded./ 20%	Ded./ 20%	Ded./ 0%	10%	Ded./ 20%	Ded./ 20%	Ded./ 0%	10%
Non-Network	Ded./ 40%	Ded./ 40%	Ded./ 30%	Ded./ 40%	Ded./ 40%	Ded./ 30%	N/A	Ded./ 40%	Ded./ 50%	Ded./ 30%	N/A
Out-patient Mental Health											
In-Network	$25 Copay	$20 Copay	Ded./ 0%	$15 Copay	$20 Copay	Ded./ 0%	$20 Copay	$25 Copay	$30 Copay	Ded./ 0%	$20 Copay
Non-Network	Ded./ 40%	Ded./ 40%	Ded./ 30%	Ded./ 40%	Ded./ 40%	Ded./ 30%	N/A	Ded./ 40%	Ded./ 50%	Ded./ 30%	N/A
Prescriptions											
Network Retail Pharmacy	$15/$30/$45	$15/$30/$45	Ded./ 0%	$15/$30/$45	$15/$30/$45	Ded./ 0%	$15/$35/$60	$15/$35/$70	$15/$35/$70	Ded./ 0%	$15/$35/$60
Mail Order	x 3	x 3	Ded./ 0%	2.5 x	2.5 x	Ded./ 0%	$30/$70/$120	$38/$88/$175	$38/$88/$175	Ded./ 0%	$30/$70/$120

Note: This is a brief summary and not intended to be a contract.

Dental RFP Results – Best and Final

City of Seabrook-
Best and Final Dental

DENTAL BENEFITS		Aetna	Aetna	Aetna	Aetna	BCBS	Lincoln		Cigna	
		Freedom of Choice	DMO- Freedom of Choice	Freedom of Choice	DMO- Freedom of Choice	PPO	HI DPPO	DHMO	DPPO HIGH	DPPO LOW
		Current	Current	Renewal	Renewal	Proposed	Proposed	Proposed	Proposed	Proposed
Type I – Preventive Services		100%	100%	100%	100%	100%	100%	See Schedule	100%	100%
Waiting Period		None	None	None	None	None	None		None	None
Oral Examinations										
X-rays										
- Bite Wings Freqency										
- Full Mouth Frequency										
Cleanings										
Topical Fluoride Treatment										
Sealants										
Type II – Basic Services		80%	100%	80%	100%	80%	80%	See Schedule	80%	90%
Waiting Period		None	None	None	None	None	None		None	None
Fillings										
- Amalgam										
- Composite										
Space Maintainers		Type I		Type I		Type I	Type I		Type I	Type I
Root Canal Treatment										
Root Planning										
Periodontic Maintenance										
Periodontal Surgery										
Extractions										
General Anesthesia		Type III		Type III		Type III	Type III		Type III	Type II
Palliative Treatment (Relief of Pain)									Type I	
Type III – Major Services		50%	60%	50%	60%	50%	50%	See Schedule	50%	60%
Waiting Period		None	None	None	None	None	None		None	None
Crowns										
Inlays and Onlays										
Removable / Fixed Bridge-Work										
Partial or Complete Dentures										
Denture Relines / Rebases									Type II	
Implants									Type IX	
Type IV - Orthodontia		50%	$2,300 Copay	50%	$2,300 Copay	50%	50%	See Schedule	50%	50%
Waiting Period		None	None	None	None	None	None		None	
Orthodontia Lifetime Maximum		$1,500	N/A	$1,500	N/A	$1,500	$1,500		$1,500	
Orthodontia Eligibility		Adult & Child	Adult & Child	Adult & Child	Adult & Child	Adult & Child	Child Only	Adult & Child	Adult & Child	Child Only
Calendar Year Deductible		Type (II, III)		Type (II, III)		Type (II, III)	(II, III)	N/A	(II, III)	N/A
Individual		$50		$50		$50	$50		$50	
Family		$150		$150		$150	$150		$150	
Dental Annual Maximum		$2,000		$2,000		$1,500	$2,000	N/A	$2,000	N/A
Maximum Rollover		Not Included		Not Included		Not Included	Not Included	Not Included	Not Included	Not Included
Preventive Max Waiver		Not Included		Not Included		Not Included	Not Included	Not Included	Not Included	Not Included
UCR Out of Network Percentile		90th		90th		90th	N/A	90th	90th	N/A
Participation Requirement							10 Employees	2 Employees	60%	20%
FINANCIALS										
Employee Only	**53**	$35.00		$36.00		$33.61	$34.26	$12.81	$32.72	$16.83
Employee & Spouse	**9**	$68.50		$70.50		$67.21	$68.34	$24.97	$65.28	$29.77
Employee & Child(ren)	**11**	$82.00		$84.40		$84.35	$81.81	$27.02	$78.14	$41.09
Employee & Family	**12**	$115.60		$119.00		$129.64	$115.33	$39.06	$110.16	$58.23
Monthly Premium	**85**	$4,760.70		$4,898.90		$4,869.75	$4,714.71	$0.00	$4,503.14	
Annual Premium		$57,128.40		$58,786.80		$58,437.00	$56,576.52	$0.00	$54,037.68	$0.00
$ Change from Current		n/a		$1,658.40		$1,308.60	-$551.88	-$57,128.40	-$3,090.72	
% Change from Current		n/a		2.90%		2.29%	-0.97%	-100.00%	-5.41%	-100.00%
Effective Date		8/1/2015		8/1/2016		8/1/2016	8/1/2016		8/1/2016	
Rate Guarantee		N/A	N/A	12 Months	12 Months	12 Months	12 Months		12 Months	

Note: This is a brief summary and not intended to be a contract.

Single Plan Option

Assumes sold with Medical

Vendor Selection Matrix

SEABROOK

Vendor Selection Matrix – Medical

	BCBS	Cigna
Cost / Benefit(30%)	24	25
Financial Stability (15%)	20	20
Communication (5%)	5	5
Claims Processing (25%)	25	25
Claims Management Reports (10%)	10	9
Integrated Systems / Technology Initiative (10%)	9	9
References / Past Performance (5%)	5	4
TOTAL	98	97

CODE KEY:

60 Below Average
70 Average
80 Average / No Basis for Comparison
90 Above Average
100 Clearly Demonstrable Advantage

ips ADVISORS

Vendor Selection Matrix – Dental

	Aetna	BCBS	Lincoln	Cigna
Cost / Benefit(25%)	25	23	23	24
Financial Stability (20%)	20	20	20	20
Communication (5%)	5	5	5	5
Claims Processing (25%)	25	25	25	25
Claims Management Reports (10%)	9	9	9	9
Integrated Systems / Technology Initiative (10%)	9	10	9	9
References (5%)	5	4	3	4
TOTAL	98	96	94	96

CODE KEY:

60 Below Average
70 Average
80 Average / No Basis for Comparison
90 Above Average
100 Clearly Demonstrable Advantage

ips ADVISORS

Recommendations

SEABROOK

Recommendations

MEDICAL

- IPS is recommending renewal with BCBS for the 2016-2017 plan year. BCBS has presented a competitive renewal (within 5%) against market competition and within IPS projections.
- The City has also changed providers last year from UHC to BCBS and IPS would advise against another carrier change to preserve carrier history and limit disruption to employees.
- IPS has provided recommended plan considerations for the City's review in this analysis for both BCBS and Cigna. IPS can provide additional contribution modeling with the City's input.

Dental

- Renewal with Aetna is recommended for the 2016 – 2017 plan year. Considering both rates and plan design, Aetna has provided a competitive renewal increase against market competition.
- The competition could also not match the Freedom of Choice plan allowing employees to migrate freely between the DPPO and DHMO providers. The City would be forced to have employees elect either the DPPO or DHMO plans if moving carriers.

ips ADVISORS

CITY OF SEABROOK

AGENDA BRIEFING

Date of Meeting: June 21, 2016

Submitter/Requestor: Sean Landis **Date Submitted:** June 9, 2016

Presenter: Sean Landis

Description/Subject: A request was made by the developer (Pacific Ridge Properties) to amend the Seabrook City Code, Appendix A, "Comprehensive Zoning", Article 4, "Special Use Regulations", by creating a new Section 4.16 "Seabrook Town Center Overlay District Regulations", and to amend Article 3, Section 3.15, "Comprehensive Land Use Matrix", by adding "Seabrook Town Center Overlay District", "Uses", permitted by right and by conditional use.

AN ORDINANCE AMENDING THE SEABROOK CITY CODE, APPENDIX A, COMPREHENSIVE ZONING, ARTICLE 4, "SPECIAL USE REGULATIONS", SECTION 4.16 "SEABROOK TOWN CENTER OVERLAY DISTRICT REGULATIONS", BY ADDING SITE AND ARCHITECTURAL REGULATIONS FOR THE AREA KNOWN COMMONLY AS "SEABROOK TOWN CENTER", AND AMENDING SECTION 3.15, "COMPREHESIVE LAND USE MATRIX", ACORDINGLY BY ADDING "SEABROOK TOWN CENTER OVERLAY DISTRICT" "USES" PERMITTED BY RIGHT AND BY CONDITIONAL USE WITHIN SUCH DISTRICT. FOR THE PURPOSES OF THIS ORDINANCE "SEABROOK TOWN CENTER" SHALL CONSIST OF THE AREA LYING WEST OF THE WESTERN EDGE OF STATE HIGHWAY 146 RIGHT-OF-WAY, NORTH OF VERMILLION DRIVE REAR PROPERTY LINES, EAST OF ED WHITE ELEMENTARY SCHOOL, SOUTH OF OAK DALE WAY REAR PROPERTY LINES, AND SOUTH OF SEABROOK METHODIST CHURCH, PROVIDING FOR A PENALTY IN AN AMOUNT NOT TO EXCEED $2000 PER OFFENSE FOR VIOLATION OF ANY PROVISION HEREOF BY INCLUSION INTO THE CODE; REPEALING ALL ORDINANCES OR PARTS OF ORDINANCES INCONSISTENT OR IN CONFLICT HEREWITH; AND PROVIDING FOR SEVERABILITY.

Name of Applicant (if applicable) : Pacific Ridge Properties

Legal Description (if applicable): A map of the proposed district is located within the attached Overlay District Ordinance Language.

Purpose/Need: Policy Issue

Background/Issue (What prompted this need?)**:** At the request of the Seabrook Town Center developer (Pacific Ridge Properties) text was drafted to create an "Overlay District". The Seabrook Town Center Commercial Development Overlay District ("STCOD") is intended to create rules that promote an attractive mixed-use retail

commercial development exhibiting an overall desirable appearance with enduring quality. The overlay will provide direction to the tenant/owner/developer by defining certain design elements and areas which should be common to the project and will unify its overall design.

Impacted Parties (Expected/Notified)**:** Surrounding properties located within 500'

Miscellaneous Comments: N/A

Recommended Action: The Planning and Zoning Commission at their regular scheduled meeting held on May 19th, 2016, considered an amendment to the Seabrook City Code, Appendix A, “Comprehensive Zoning”, Article 4, “Special Use Regulations”, by creating a new Section 4.16 “Seabrook Town Center Overlay District Regulations", and to amend Article 3, Section 3.15, "Comprehensive Land Use Matrix", by adding "Seabrook Town Center Overlay District", "Uses", permitted by right and by conditional use.

The Commission after hearing testimony from City Staff along with the General Public voted to recommend approval of the “Overlay District” as presented by city staff. The vote was six to approve with one abstaining vote.

Ayes: Miller, DeHart, Caradec, Hammann, Potts, and Sharpe
Nays:
Abstained: Davis

Attachments:
(1.)Copy of Proposed Seabrook Town Center Overlay District Ordinance Language.
(2.)Copy of Proposed Changes to the Zoning Land-Use Matrix.

Fiscal Impact:

Finance Officer Review	☐ Yes	☒ No
Budgeted	☐ Yes	☒ No
Budget Amendment Required	☐ Yes	☒ No

Budget Dept/Line Item Number: N/A
Future/Ongoing Impact: N/A

Funding Comments: N/A

Where on the agenda should this item be placed? Specific Public Hearing

Suggested Motion:

(All items are to be reviewed and approved by the city manager, except items submitted by the mayor or any council member or routine consent agenda items such as minutes and second & third readings of ordinances.)

All requests must be submitted to the City Secretary's Office no later than 12:00 p.m. on the Monday, one week prior to the regular Tuesday Council Meeting. All required attachments are to be submitted with the request. Incomplete items cannot be placed on the agenda.

Sent to City Attorney for review on

Approved by City Attorney on
(City Attorney should review all ordinances, resolutions, contracts and executive session items.)

All requests must be submitted to the City Secretary's Office no later than 12:00 p.m. on the Monday, one week prior to the regular Tuesday Council Meeting. All required attachments are to be submitted with the request. Incomplete items cannot be placed on the agenda.

Planning & Zoning Commission
OFFICIAL REPORT

The Planning and Zoning Commission of the City of Seabrook met on May 19, 2016 to hold a meeting to consider:

Request for an amendment to the Seabrook City Code, Appendix A, "Comprehensive Zoning", Article 4, "Special Use Regulations", Section 4.16 "Seabrook Town Center Overlay District Regulations".

THE PLANNING & ZONING COMMISSION MADE THE FOLLOWING RECOMMENDATION:

APPROVAL ■ **APPROVAL WITH AMENDMENTS/CONDITIONS (SEE BELOW)** □ **DENIAL** □
by a concurring vote of a majority of members of the Planning and Zoning Commission present at the meeting on May 19, 2016, as designated below and as certified by the signature of the Chairman. **This document is not valid unless signed by the Chairman/Presiding Commissioner.**

VOTE:	AYE	NAY	ABSTAINED	ABSENT	INITIAL
Rosebud Caradec	RC				RC
Laura Davis			LD		LD
Mike DeHart	MD				MD
Buddy Hammann					
Dodie Miller	DM				DM
Michael Potts	MP				MP
Michael Sharpe	MDS				MDS

Michael Potts
Michael Potts, Chairman
Planning & Zoning Commission

ATTEST:
Alesia L. Hammock
Alesia L. Hammock
Secretary

CITY OF SEABROOK
ORDINANCE NO. 2016-16

AN ORDINANCE AMENDING THE SEABROOK CITY CODE, APPENDIX A, COMPREHENSIVE ZONING, ARTICLE 4, "SPECIAL USE REGULATIONS", CREATING A NEW SECTION 4.16 "SEABROOK TOWN CENTER OVERLAY DISTRICT REGULATIONS", SUCH DISTRICT CONSISTING OF THE AREA LYING WEST OF THE WESTERN EDGE OF STATE HIGHWAY 146 RIGHT-OF-WAY, NORTH OF VERMILLION DRIVE REAR PROPERTY LINES, EAST OF ED WHITE ELEMENTARY SCHOOL, SOUTH OF OAK DALE WAY REAR PROPERTY LINES, AND SOUTH OF SEABROOK METHODIST CHURCH, AS FURTHER DEPICTED IN ATTACHMENT A, HEREIN, BY ADDING SITE AND ARCHITECTURAL REGULATIONS FOR THE AREA KNOWN COMMONLY AS "SEABROOK TOWN CENTER", AND AMENDING SECTION 3.15, "COMPREHESIVE LAND USE MATRIX", ACORDINGLY BY ADDING "SEABROOK TOWN CENTER OVERLAY DISTRICT" "USES" PERMITTED BY RIGHT AND BY CONDITIONAL USE WITHIN SUCH DISTRICT; RECODIFIYING THE CURRENT SECTION 4.16 "TELECOMMUNICATION TOWERS AND ANTENNAE" UNDER A NEW SECTION 4.25 UNDER THE SAME TITLE, TO ALLOW FOR FUTURE EXPANSION OF ARTICLE 4; PROVIDING FOR A PENALTY IN AN AMOUNT NOT TO EXCEED $2000 PER OFFENSE FOR VIOLATION OF ANY PROVISION HEREOF BY INCLUSION INTO THE CODE; REPEALING ALL ORDINANCES OR PARTS OF ORDINANCES INCONSISTENT OR IN CONFLICT HEREWITH; AND PROVIDING FOR SEVERABILITY.

WHEREAS, the City Council of the City of Seabrook is continually reviewing the provisions of the City Code of Ordinances relating to land use and other circumstances which generally impact the health, safety and well-being of residents, citizens and inhabitants; and

WHEREAS, the Planning and Zoning Commission, in cooperation with the property owners, have studied, reviewed and prepared special use regulations for consideration by City Council to address the uniform development in relation to uses for property within the area lying west of the western edge of State Highway 146 right-of-way, north of the Vermillion Drive rear property lines, east of Ed White Elementary School, south of Oak Dale Way rear property lines, and south of Seabrook Methodist Church as shown in Attachment A, which is made a part of this Ordinance, (the "Tract'); and

WHEREAS, all public notices have been published, mailed and provided in accordance with statute and the City Code of Ordinances, Appendix A of the City Code of Ordinances (Zoning Code); and

WHEREAS, the Planning and Zoning Commission recommended approval of this zoning change for the Tract, commensurate with the addition of site, architectural and related design standards and uses at its meeting of May 19, 2016, and has made its final report; and

WHEREAS, the City Council and the Planning and Zoning Commission of the City of Seabrook have studied the present provisions of the Code of Ordinances of the City of Seabrook and have determined the need to update the provisions relative to special uses of Tract for reference in the land use matrix; and

WHEREAS, the City Council now desires to recodify the current Section 4.16 entitled "Telecommunication Towers and Antennae" under a new Section 4.25 under the same title, to allow for future expansion of Article 4, "Special Use Regulations"; and

WHEREAS, all public notices have been posted, published and all required hearings on this matter have been held in accordance with the Comprehensive Zoning Ordinance and law; now, therefore,

BE IT ORDAINED BY THE COUNCIL OF THE CITY OF SEABROOK, STATE OF TEXAS:

SECTION 1. FINDINGS OF FACT.

That the facts and matters set forth in the preamble of this Ordinance are hereby found to be true and correct.

SECTION 2. AMENDMENT TO THE SEABROOK CITY CODE, APPENDIX A, ARTICLE 4, SECTION 4.16.

The Code of Ordinances of the City of Seabrook, Appendix A, "Comprehensive Zoning", Article 4, "Special Use Regulation", is hereby amended by creating a new Section 4.16 entitled "The Seabrook Town Center Overlay District Regulations" to establish design regulations, including site, architectural and related design standards and regulations for developments within the area lying west of the western edge of State Highway 146 right-of-way, north of the Vermillion Drive rear property lines, east of Ed White Elementary School, south of Oak Dale Way rear property lines, and south of Seabrook Methodist Church as shown in Attachment A, (the "Tract"), which is made a part of this Ordinance.

The Tract to be rezoned is shown in Attachment A, Section 4.16 which is incorporated herein by reference.

Upon passage of this Ordinance, the official zoning map of the City of Seabrook shall be amended to reflect this change.

<u>SECTION 3.</u> AMENDMENT TO THE SEABROOK CITY CODE, APPENDIX A, ARTICLE 3, SECTION 3.15.

The Code of Ordinances of the City of Seabrook, Appendix A, "Comprehensive Zoning", Article 3, "Establishment of Zoning Districts and Associated Regulations", Section 3.15 "Comprehensive Land Use Matrix", is hereby amended by adding "Seabrook Town Center Overlay District (STCOD)", "Uses", permitted by right and by conditional use within such district as shown in Attachment B, which is made part of this Ordinance.

<u>SECTION 4</u>. AMENDMENT TO THE SEABROOK CITY CODE TO RECODIFY THE CURRENT SECTION 4.16, UNDER A NEW SECTION 4.25.

The Code of Ordinances of the City of Seabrook, Appendix A, "Comprehensive Zoning", Article 4, "Special Use Regulation", is hereby amended to recodify the prior Section 4.16 entitled "Telecommunication Towers and Antennae" under a new Section 4.25 under the same title, to allow for future expansion of Article 4.

<u>SECTION 5</u>. INCORPORATION INTO THE CODE, PENALTY CLAUSE.

This Ordinance is hereby incorporated and made a part of the Seabrook City Code. Violation of this Ordinance is subject to the penalty section of said Code including, Section 11.06, "Criminal Enforcement" which provides that any person who shall violate any provision of this Ordinance shall be deemed guilty of a misdemeanor and, upon conviction, shall be fined in an amount not to exceed $2,000.00. Each day of violation shall constitute a separate offense.

<u>SECTION 6</u>. REPEAL OF CONFLICTING ORDINANCES.

All ordinances or parts of ordinances in conflict or inconsistent with this Ordinance are hereby expressly repealed.

<u>SECTION 7.</u> SEVERABILITY.

In the event any clause phrase, provision, sentence, or part of this Ordinance or the application of the same to any person or circumstances shall for any reason be adjudged invalid or held unconstitutional by a court of competent jurisdiction, it shall not affect, impair, or invalidate this Ordinance as a whole or any part or provision hereof other than the part declared to be invalid or unconstitutional; and the City Council of the City of Seabrook, Texas, declares that it would have passed each and every part of the same notwithstanding the omission of any such part thus declared to be invalid or unconstitutional, whether there be one or more parts.

<u>SECTION 8</u>. NOTICE.

The City Secretary shall give notice of the enactment of this Ordinance by promptly publishing it or its descriptive caption and penalty after final passage in the official newspaper of the City; the Ordinance to take effect upon publication.

PASSED AND APPROVED on first reading this _____ day of _____, 2016.

PASSED AND APPROVED on second and final reading this _____day of _____, 2016.

BY: _____
Glenn Royal, Mayor

ATTEST:

By: _____
Robin Hicks, TRMC
City Secretary

APPROVED AS TO FORM:

_____
Steven L. Weathered
City Attorney

Attachment A.

Sec. 4.16. The Seabrook town center commercial development overlay district regulations.

4.16.01. Purpose: The Seabrook Town Center Commercial Development Overlay District ("STCOD") is intended to promote an attractive mixed-use retail commercial development exhibiting an overall desirable appearance with enduring quality. The overlay will provide direction to the tenant/owner/developer by defining certain design elements and areas which should be common to the project and will unify its overall design. The standards that follow allow for and promote design integration. The city has conducted extensive study for the purposes of establishing the regulations that follow:

4.16.02. Applicability: All new developments and changes to existing developments in the district that require site plan or building permit approval are subject to the requirements of the overlay district in addition to other applicable regulations in the City's Code of Ordinances. Nothing contained in this section 4.16 shall be deemed to reduce applicable requirements contained in other sections of this Code, or any ordinance specifically applicable to a development (e.g., conditional use permit or planned unit development), but instead to enhance the aesthetics and associated uses of this overlay district.

4.16.03. Boundaries of the overlay district: The Seabrook Town Center Commercial Development overlay district ("STCOD") shall consist of the area lying west of the western edge of (State Highway 146 right-of-way, north of Vermillion Drive rear property lines, east of Loch Lake Drive rear property lines, east of Ed White Elementary School, south of Oak Dale Way rear property lines, and south of Seabrook Methodist Church.

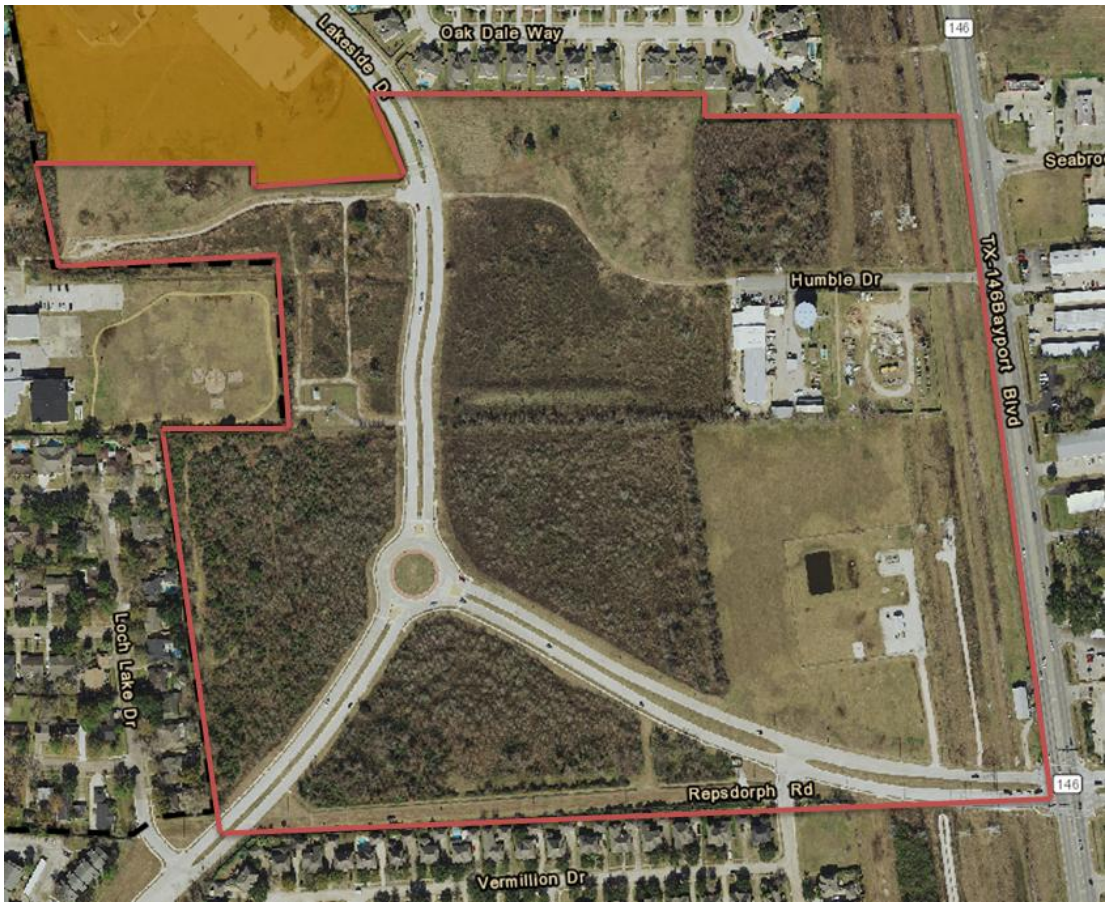

*4.*16.04. *Submission and plan review procedures:*

A. Application submittals*:* A completed building permit application form and three (3) sets of plans printed at a standard architectural sheet size of a minimum of (24”X 36”) along with one electronic copy in PDF format, and include the following:

1. Site Survey.

2. Site improvement details such as building(s), parking lot(s) and or garage, curbing, walks, culvert, fences, water quality elements, screens, and mechanical equipment.

3. Civil plans that include existing and proposed grades and wet/dry utilities with sizes and locations.

4. Building plans and elevations (one copy of a colored elevation is needed). Samples of all exterior building materials to show color, texture, and finish.

5. A separate Landscape Plan(s) showing all vegetation setbacks, existing and proposed plant material, and irrigation to be installed (irrigation should be to shoulder of road within jurisdictional codes, ordinances, etc).

6. Site and exterior building Lighting Plan with Lumens per acre calculations and photo metrics including average light levels achieved.

7. Location and details for all exterior signage whether freestanding or building mounted (Signage Plan).

8. Construction access and staging areas.

4.16.05. Uses: Uses permitted by right and by conditional use shall be governed by Section 3.15, “Comprehensive land use regulation matrix” STCOD District.

4.16.06. Area Regulations:

Street Setback Criteria						
	Landscape & Parking Setbacks			**Building Setbacks**		
	Front	Side**	Rear	Front	Side*	Rear
Streets						
SH 146	20’	5’	5’	40’	40’	10’
Repsdorph	15’	5’	5’	25’	25’	10’
Lakeside	15’	5’	5’	25’	25’	10’

*For Lots where buildings abut each other for a contiguous shopping center, the Building Side Setback can be 0’.

**For Lots where the lot line runs in the middle of a driveway for a contiguous shopping center, the Landscape Setback can be 0'.

	Side Building Setback Requirements			
Land Use	Adjoining Thoroughfare	Adjoining Collector	Adjoining R-1 – R-2 Single Family	Adjoining Commercial
Commercial	25'	25'	50'	Per IBC

	Rear Building Setback Requirements			
Land Use	Rearing Thoroughfare	Rearing Collector	Adjoining R-1 – R-2 Single Family	Adjoining Commercial
Office	10'	10'	50'	10'
Retail	10'	10'	50'	10'

4.16.07. Building height: No building or structure shall have a finished floor whose elevation exceeds 74 feet 11 inches above finished grade. Structures exceeding 50 feet in height shall require a conditional use permit and shall be set back from properties zoned R-1 and R-2 a distance equal to the height of the structure. This setback shall not apply to church steeples, spires, belfries, cupolas, or other normal appurtenances usually required to be placed above the roof level and not intended for human occupancy.

4.16.08. Buffering and screening:

A. Special Landscape Area: (Graphic 4-A delineates the Special Landscape Area boundaries) the area within 50' of contiguous and adjoining R-1 zoned properties located in the Special Landscape Area shall meet the following standards:

1. Pervious, landscaped area
2. No drives or parking
3. No commercial or retail use
4. Irrigated and maintained by the owner thereof in good order, appropriately trimmed and clear of trash/debris.

B. Special Screening /Buffering: Along the Boundary with contiguous and adjoining R-1 zoned properties located in the Special Landscape Area, the following requirement shall apply:

1. 8' masonry wall without openings

2. Trees no shorter than 8’ tall and in a quantity of no less than one tree per four feet of boundary wall shall be planted, maintained, and replaced as required. The lay out shall be approved by the City Planning Director at the time of plan approval for the Project. The trees shall be appropriately irrigated.

C. Special Setbacks for Certain Uses: The following uses must be setback 75’ from the following distances from contiguous and adjoining R-1 zoned properties located in the Special Landscape Area:

1. Loading Docks

2. Trash Dumpsters

3. Open Storage

Graphic 4-A
Special Landscape Area

4.16.09. Outside storage and display: Outside storage, display, and sales is only permitted for Single Tenants that exceed 50,000 SF of Gross Interior Square Footage. Outside Storage must be screened from view from all public streets with the use of screening walls, landscaping, or berms. Outside display and sales areas must be out of traffic circulation areas and maintained at all times to keep the area clean and free of debris and trash.

4.16.10. Parking: Concrete paving on any Lot shall be used for all paving surfaces of sufficient thickness to withstand the anticipated commercial traffic based on sound Geotechnical Engineering recommendations for the Lot. Paint Striping for Fire Lanes shall be per City requirements. Paint Striping for Parking and Traffic Control shall be 4" in width, White Traffic Paint, of the Best Commercial Quality. Pavers are required at all driveway entry points from a Public Right Of Way. Pavers shall be set on recessed 7" paving according to City standards. Pavers to start 15' inside of the Lot and extend to 25' inside the Lot and run the full width of the driveway. Pavers shall be modular concrete pavers, "Holland Stone – Antique Buff" color by Pavestone or approved equivalent. Paver areas shall be framed with 2 Soldier courses and then filled in with a Parquet pattern. Required parking shall be in accordance with Section 5, specifically including Section 5.04, Table 5-C, "Required Parking Spaces by Land Use Category" of Appendix "A" of the Code of Ordinances.

4.16.11. Landscaping: Each Lot shall have to be landscaped in accordance with the following guidelines and include a complete irrigation system. Preservation of healthy and desirable trees is encouraged where reasonable and should be considered in the design and layout of each Lot.

A. Plants shall be selected from Table 4-A "Approved Plant List". These materials have been selected because they are generally native, drought resistant, and non-invasive. These same characteristics should be considered for seasonal color plantings also. Landscaped Islands, Setback Areas, and Green Spaces to include Solid Sod Bermuda Grass where mulched beds are not used.

B. All Plant material shall be sound, healthy specimens typical of their species, free from injurious insects or disease. Plant proportions shall be those recognized as normal for a well grown plant of that species and size, as used by the American Standard for Nursery Stock. Caliper for sizes shall be taken on the trunk 6" to 12" above natural ground.

C. Street Trees and Shrubs: One Tree will be required for every 50' of Street Frontage per Lot to be placed in the Landscape Setback. These trees can be clustered for planting so long as the quantity is met. Street Trees shall be 65 gallon, 3 ½" minimum caliper, and 12'-14' in height at time of planting. (Street Trees and Shrubs will not be required for SH 146 Frontage.) Twenty-five (25) shrubs will be required for each 75' of Street Frontage per Lot to be placed in the Landscape Setback. These shrubs shall be planted at 36" on center. Shrubs shall be minimum 3 gallon size.

D. Planting Islands: Parking rows should have Landscaped Islands on each end of the rows which shall contain one to two trees in each island depending on the reasonable planting and island size. If, at anytime, the required vegetation becomes diseased, deteriorated, or dies, the owner of the premises must replace the vegetation within 30 days of written notice of the city.

Table 4-A
Approved Plant List

APPROVED PLANT LIST

Small Trees	Common Name	Reforestation Species
Bumelia celastrina	Tropical Buckthorn	Yes
Cercis canadensis	Redbud	Yes
Chionanthus virginicus Fringe Tree		
Comus florida	Dogwood	
Diospyros virginiana	Eastern Persimmon	
Hamameys Virginiana	Witch Hazel	
Lagerstroemia indica	Crepe Myrtle	
Malus Spp.	Crabapple	
Pistacia texana	Texas Pistache	Yes
Prunus mexicana Mexican Plum		
Pyrus calleryana bradfordii	Bradford Pear	
Sophora spp.	Mountain Laurel	

Medium & Large Trees

Acer Rubrum "Drummondii"	Swamp Maple	Yes
Betula nigra	River Birch	
Carya illinoinensis	Pecan	
Celtis laevigata	Southern Hackberry	Yes
Fraxinus americana	White Ash	
Fraxinus pennsylvanica	Green Ash	Yes
Juglans nigra	Black Walnut	
Liquidamber styraciflua	Sweetgum	Yes
Liriodendron tulipifera	Tulip Tree	
Magnolia grandiflora	Southern Magnolia	
Ostrya virginiana	American Hop Hornbeam	
Pinus taeda	Loblolly Pine	Yes
Platanus mexicana	Mexican Sycamore	
Platanus occidentalis	American Sycamore	
Quercus falcata	Swamp Red Oak	Yes
Quercus glaucoides	Lacey Oak	
Quercus michauxii	Swamp Chestnut Oak	
Quercus macrocarpa	Bur Oak	Yes
Quercus shumardii	Shumard Oak	
Quercus texana	Red Oak	
Quercus texana nuttall	Nuttall Oak	Yes
Quercus virginiana	Live Oak	
Sabal Texana (Mexicana)	Texas Sabal	
Taxodium distichum	Bald Cypress	Yes
Ulmus crassifolia	Cedar Elm	Yes

Shrubs, Dwarf Shrubs & Plants

Azalea	Azalea	
Abelia grandiflora prostrata	Dwarf Abelia	
Berberis thumbergii	Pigmy Barberry	
Gardenia radicans	Dwarf Gardenia	
Hesperaloe parviflora	Red Yucca	
Ilex Spp.	Holly-Yaupon	
Lantana horrida T	exas Lantana	
Nandina domestica nana	Dwarf Nandina	
Poliomintha longifolia	Mexican oregano	
Penstemon baccharifolius	Red Penstemon	
Pittosporum tobira	Dwarf Pittosporum	
Rosemarinus officinalis	Rosemary	
Salvia leucantha	Mexican Brush Sage	

Small Shrubs & Plants

Abelia Spp.	Abelia	
Anisacanthus wrightii	Hummingbird Bush	
Aucuba japonica	Aucuba	
Buxus Spp.	Boxwood	
Callicarpa americana	American Beauty Berry	Yes
Chaenomeles japonica	Flowering Quince	
Gardenia Spp.	Gardenia	
Hydrangea macrophylla	Hydrangea	
Opuntia compressa	Lowprickly pear cactus	
Malvaviscus drummondii	Turk's Cap	Yes
Opuntia engelmannii texana	Flaming prickly pear cactus	
Opuntia engelmannii linguiformis	Cow's tongue prickly pear cactus	
Opuntia leptocarpa Mackenson	prickly pear cactus	
Pavonia lasiopetala	Rock Rose	
Pistacia texana	Texas Pistachio	Yes
Raphiolepis indica	Indian Hawthorne	
Spiraea prunifolia	Bridal Wreath Spirea	
Yucca pallida	Paleleaf Yucca	
Yucca torreyi	Spanish Bayonet Yucca	

Medium Shrubs & Plants

Azalea indicum Indica	Azalea	
Buddleia Spp.	Butterfly Bush	
Camellia Spp.	Camellia	
Elaeagnus fruitlandi	Silverberry	
Feijoa sellowiana	Pineapple Guava	
Hibiscus coccineus	Texas Star Hibiscus	Yes
Hibiscus syriacus	Althea	
Ilex Spp.	Holly-Yaupon	Yes
Ilex decidua	Possumhaw	Yes
Jasminum Spp.	Jasmine	
Lagerstroemia indica "dwarf"	Dwarf Crepe Myrtle	
Leucophyllum frutescens	Texas Sage	
Ligustrum texanum	Wax Leaf Ligustrum	

Lonicera fragrantissima	Winter Honeysuckle	
Malvaviscus drummondii	Turk's Cap	Yes
Crinum americanum	Crinum Lily	
Liriope Spp.	Lily Turf	
Lupinus texensis	Bluebonnet	
Lantana camara	Lantana	
Ophiopogon japonicum	Monkey grass	
Opuntia compressa	Low prickly pear cactus	
Opuntia engelmannii texana	Flaming prickly pear cactus	
Opuntia engelmannii linguiformis C	ow's tongue prickly pear cactus	
Opuntia leptocarpa	Mackenson prickly pear cactus	
Osmunda cinnamomea	Cinnamon Fern	Yes
Osmunda regalis	Royal Fern	Yes
Saururus cernuus	Lizardtail	
Sedum Spp.	Sedum	
Verbena peruviana	Peruvian Verbena	
Vinca minor and major	Vinca	
Woodwardia aereolata	Chain Fern	Yes

Grasses Lawn and Ornamental

Cynodon dactylon	Common Bermuda	
Buchloe dactyloides	Buffalo Grass	
Bouteloua gracilis	Blue Grama	Yes
Bouteloua curtipendula	Sideoats Grama	
Muhlenbergia capillaris	Gulf Muhly	Yes
Muhlenbergia lindheimeri	Lindheimer Muhly	Yes
Schizachyrium scoparium	Little Bluestem	
Stipa tenuissima	Mexican Feather Grass	Yes

4.16.12. Sidewalks: The pedestrian paving will be constructed either within appropriate public street rights-of-ways and/or within the Landscape Setbacks. All walks must be constructed in a consistent workmanlike manner.

A. Minimum construction requires sidewalks to be four inches (4") thick with #3 reinforcement at eighteen inches (18”) on center both ways. Public Sidewalks located within the City or County right-of -way shall be a minimum of five feet wide. No cold joints are permitted. Complete pours between expansion joints are required. Drill dowels into existing concrete curbs and driveways and use expansion joints with slip dowels at connections of existing and new concrete. Dowels are to be stubbed out where sidewalk is to be continued in the future.

B. Sidewalk elevations shall match with the existing manhole and valve box elevations. If adjustments of the height are required, Owner shall notify the Seabrook Public Works Department (24 hours) prior to sidewalk construction. If adjustments must be made, the Owner-builder/site developer will be responsible for such adjustments. Handicap ramps are required at every street and other locations required by **Americans with Disabilities Act of 1990 (ADA)** as amended.

4.16.13. Site lighting:

A. A lighting photometric drawing, as part of the Lighting Plan, shall be submitted depicting the design layout and illustrating a point-by-point foot-candle lighting to achieve a minimum average level of four foot (4') candles with a maximum/minimum uniformity ratio not to exceed (10:1). All office building lighting will achieve a minimum average lighting level of four foot (4') candles. The types, size, and style of the lighting fixtures shall also appear in the form of a schedule to the Lighting Plan.

B. All parking lot pole mounted lighting shall use the "GE Evolve LED lighting fixture with a minimum wattage of three hundred and fifteen (315) watts. Fixtures and poles shall have a powder-coated finish and shall be black color finish. Standards for parking lots shall be a maximum of thirty-nine feet (39') tall, on a 30" diameter, 30" tall concrete base that is painted white to match the traffic marking paint, and shall have a Glare light shield fixture. The arrangement of parking lot and drive way lights should provide adequate light coverage at all parcel entries and exits.

C. Buildings shall be adequately lit at night. Light fixtures shall be attractive, efficient, and shall not create Glare or spillover into adjacent properties. No flood lights shall be mounted on buildings except for wall packs at the rear of the buildings. Where used, the wall packs must be shielded to prevent light trespass onto adjoining properties.

D. Spillover at perimeter property lines shall be 0.00 foot-candles measured along the property line at a height of 30" above grade. Lighting fixtures located across or adjacent to R-1 and R-2 Single Family Residential Districts shall use "House Side Shields" to minimize glare.

E. Exterior lighting must enhance the atmosphere and safety of all public parking areas, walkways and entrances. Lighting shall be low key and placement of fixtures shall coincide with major walkway areas.

F. Choice of light fixtures and poles, other than parking lot light fixtures, must reflect the theme and architecture of the Project. Structure illumination shall be lit with a concealed, stationary-shielded light source.

G. All areas within the Property must be illuminated with area and decorative lighting continuously during operating hours or from dusk until at least 12:00 a.m. Each Owner of a Tract within the Project shall maintain at least one (1) exterior night light. Where multiple parcels/buildings are under one ownership, for the purposes of this exterior night light requirement, each tract shall be considered a separate tract.

H. Provided however, notwithstanding subsections (A) and (B) above, an applicant may present to the planning and zoning commission, on the site plan, specifications which include alternative materials if they meet or exceed the appearance and atmosphere requirements above and appear better suited under the circumstances.

4.16.15. Signage: Signage in the Overlay District shall be uniform in materials and general appearance.

A. Ground Sign Types: Three types of Multi Tenant on premise Ground Sign types will be allowed and must all be permitted through the City.

1. The signage shall be constructed in accordance with Graphic 4-B and 4-H.

Graphic 4-B
60’ Max Height Multi-Tenant Ground Sign.

Graphic 4-C
50’ Max Height Multi-Tenant Ground Sign.

Graphic 4-D

30’ Max Height Multi-Tenant Ground Sign.

2. The signage shall be located in accordance with Graphic 4-E.

Graphic 4-E
Multi-Tenant Ground Sign Location Map.

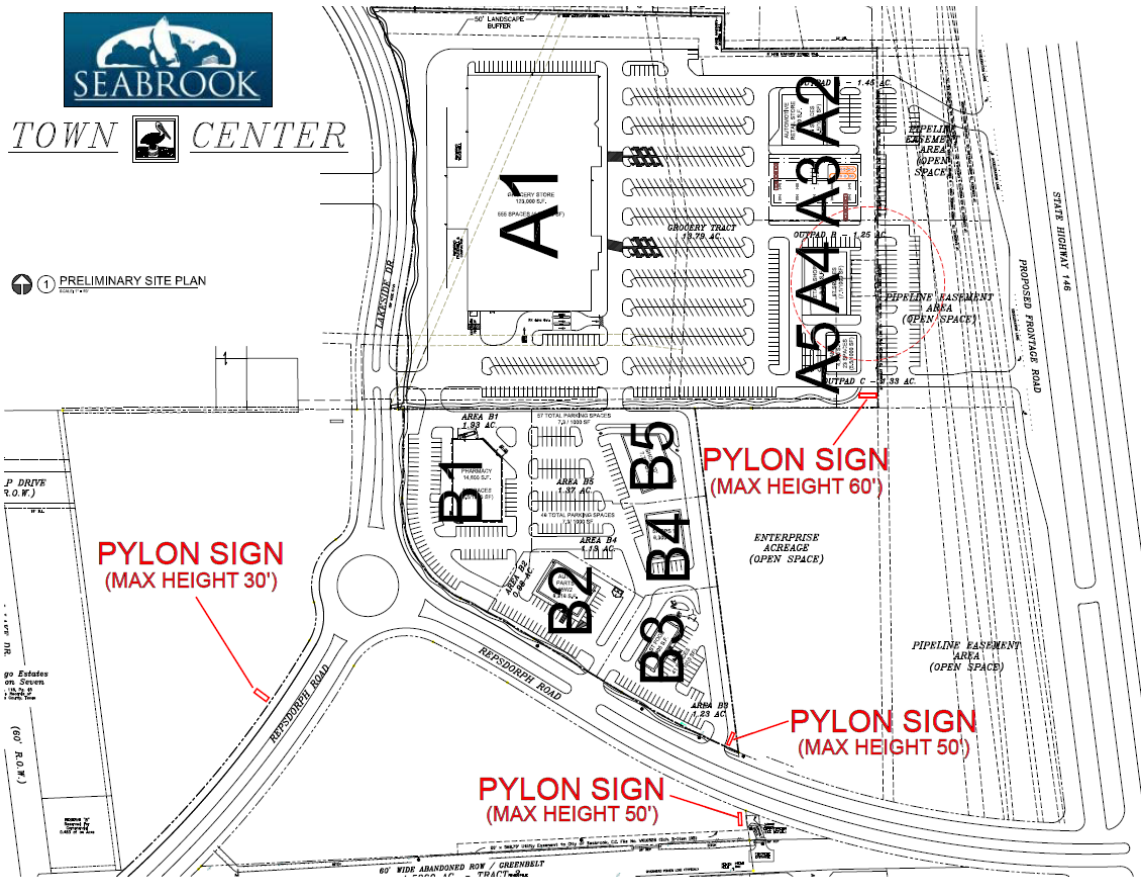

3. Multi-Tenant, Single Lot signage: One sign of this type will be permitted per applicable Lot. A sign of this type shall have a maximum height of 8’ and maximum width of 6’ including all structure and finishes.

Graphic 4-F

4. Single Tenant, Single Lot signage: One sign of this type will be permitted per applicable Lot. A sign of this type shall have a maximum height of 5’ and maximum width of 4’ including all structure and finishes.

Graphic 4-G

B. Building Signs:

1. Lettering shall not exceed 10’ high and must be in proportion to the building facade area on which they are being placed. Sign Area (created as a rectangle around all lettering and images) cannot exceed 80% of the width of the space being identified multiplied by a factor of 2.

2. Multi-tenant building signs lettering shall not exceed 36” when in a single row of text, and 54” total when in two rows of text (providing a 6” space between the two rows).

3. Signs may be Individual Channel Letters or Wireway mounted, provided the Wireway is bottom justified and colored to match the building facade. Box Signs will not be allowed. Internally lit or back lit signs are allowed. Logos will not be permitted except for nationally recognized businesses.

4. Businesses that have frontage on multiple streets shall be allowed one sign per frontage that they face.

C. Directional Signs: Small directional signs may be used where it helps circulation on site. No directions sign shall exceed 6 square feet in size or 36” tall, and lettering should be no more than 4” tall.

Graphic 4-H

4.16.16. External architectural finishes: Buildings located in the Overlay District must be uniform in materials and general appearance.

A. Acceptable Materials: Building Exterior Finishes, other than fenestrations, shall consist of Stone, Brick, Stucco, EIFS, Metal Panels, Painted Concrete Wall Panels, Painted or Decorative Concrete Block, and Cement Board Rain Screen Systems. A minimum of 18% of each façade shall consist of Brick or Stone. Main Field Colors should consist of earth-tone colors.

B. Specific Colors: When used in the facade of a building, Stone is to be Texas White Limestone in Random Ashlar Pattern, Brick is to be ACME Cinnamon Brown, Standing Seam Metal Roofing shall be Sierra Tan by Berridge Roofing, Aluminum Storefront is to be Clear Anodized, and Painted Concrete Block or Painted Concrete Wall Panels are to have heavy texture.

4.16.17. Supplementary regulations:

A. Dumpster enclosures: All trash and utility areas shall be screened from public view and backyard views with masonry wall and can also be further screened by landscape and other devices. Trash areas and dumpster locations shall be permanently fenced or screened with enclosures per Exhibits 2 thru 4 so that trash container / dumpster shall not be visible from any public street.

1. The enclosures shall be constructed in accordance with Graphic 4-I thru 4-L and kept closed at all times other than at trash pick-up times.

Graphic 4-I
Dumpster Enclosure

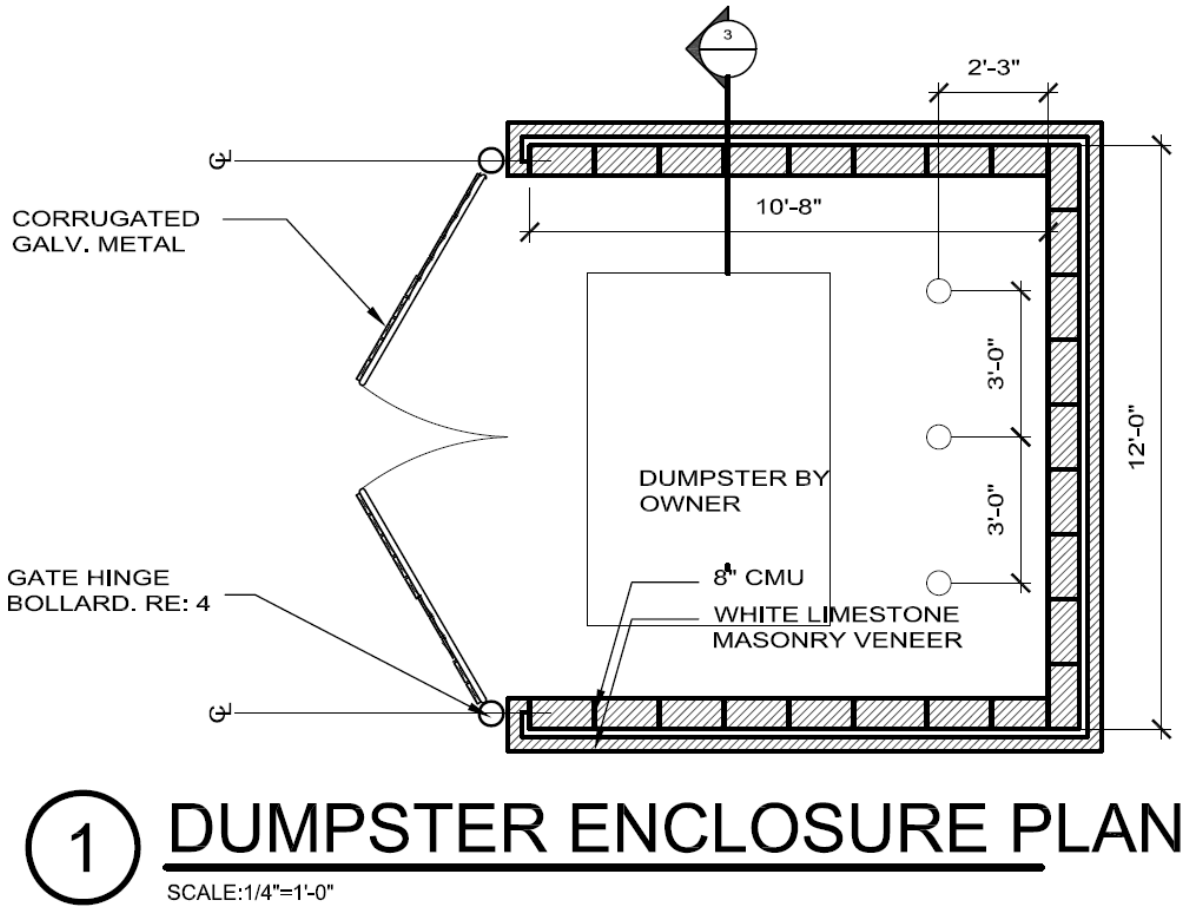

Graphic 4-J
Dumpster Enclosure

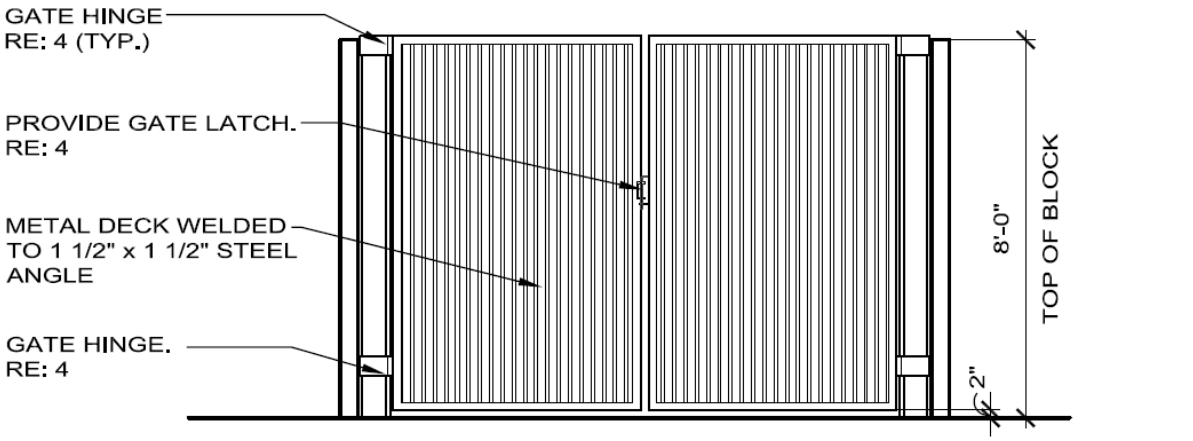

2 DUMPSTER ENCLOSURE PLAN

SCALE:1/4"=1'-0"

Graphic 4-K
Dumpster Enclosure

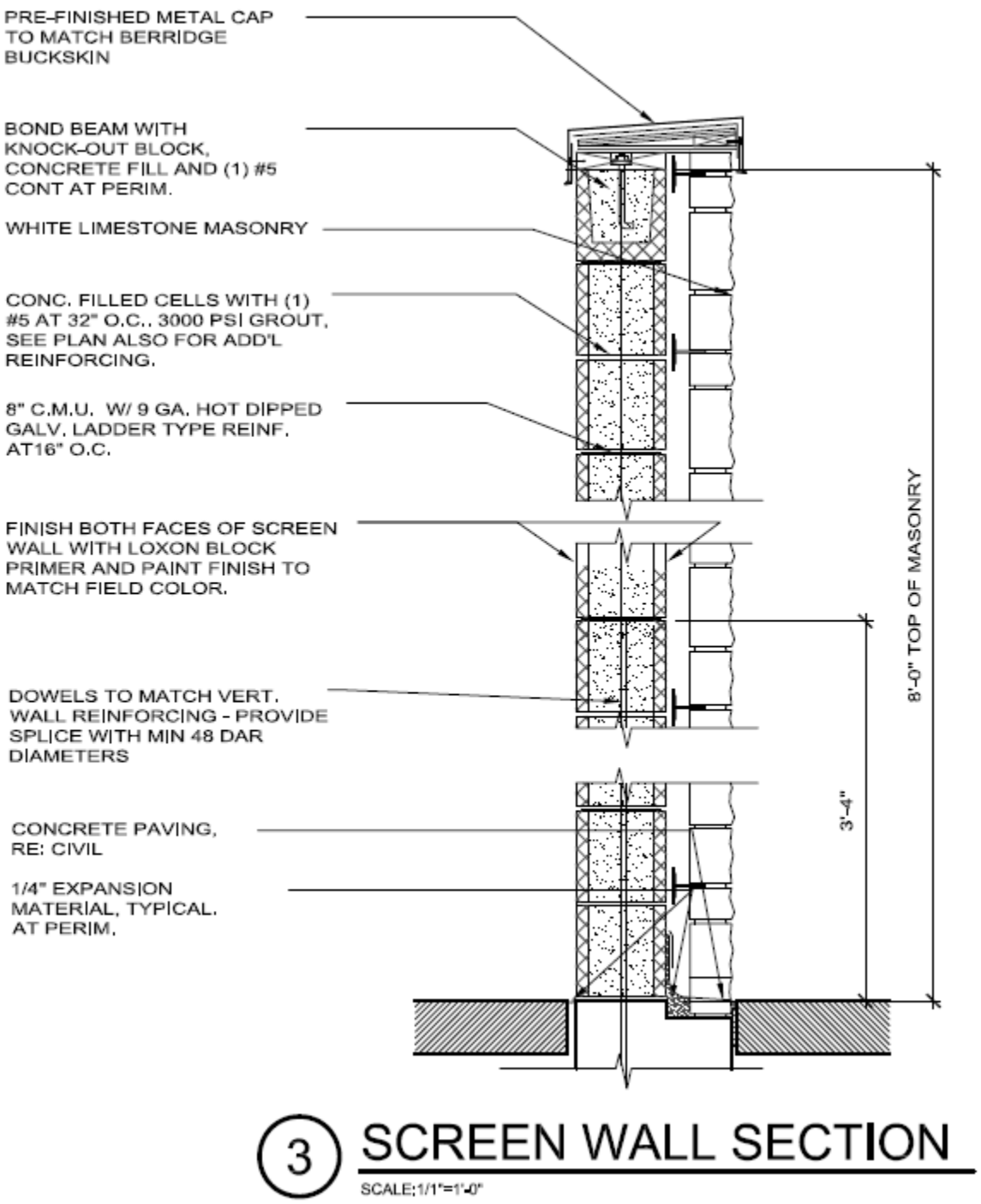

3 SCREEN WALL SECTION

SCALE: 1/1"=1'-0"

Graphic 4-L
Dumpster Enclosure

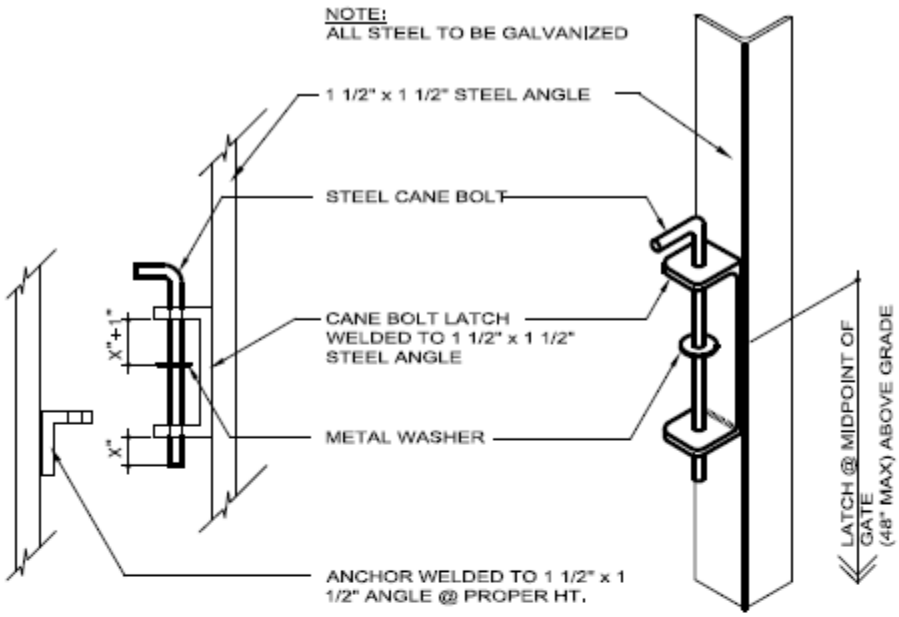

GATE LATCH DETAIL

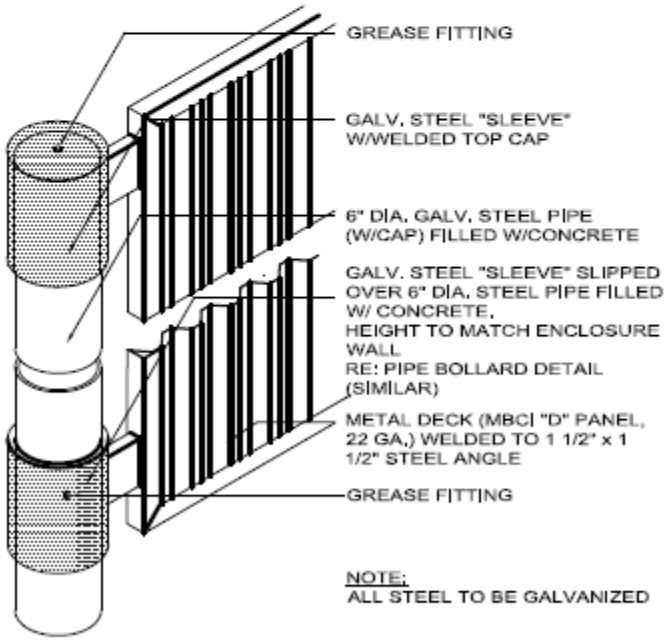

GATE HINGE DETAIL

4 GATE LATCH DETAIL

SCALE: N.T.S.

B. Temporary structures: Structures for uses incidental to construction work on the premises which are removed upon completion or abandonment of construction work are allowed upon permit from the building official.

C. Temporary structures: No structures, including recreational vehicles, construction trailers, or travel trailers may be used for on-site dwelling purposes.

Sec. 3.15 Comprehensive land use regulation matrix.

Attachment B.

TABLE 3-A

Uses Permitted by Right and Conditional Uses [1]

X = Use by right. **C = Conditional use permit required.** **PUD = Planned unit development.** *** = Active sales office required.**

Land Use Activity	R-LD	R-1	R-2	R-3	C-1	C-2	C-3	C-S	WAD	MMU	POD[2]	STCOD[3]	OS	MH	LI
Residential Uses															
Apartments				X											
Assisted Living Facilities				X	C	C									
Cluster housing			X	X									X		
Condominium				X					C	C					
Duplex				X									X		
Group homes	X	X	X	X											
Manufactured home / manufactured home park														X	
Single-family detached residence	X	X	X	X									X	X	
Townhouse				X						C					
Zero lot line homes			X	X											
Non-Residential Uses															
Accessory building/uses (all uses must be allowed per the zone)	X	X	X	X	X	X	X	X	X	X	X	X	X	X	X
Alterations, clothing					X	X	X	X	X	X		X	X		X
Ambulance service						X	X	X							X
Animal training schools						X	X	X							X
Appliance dealers / rental						X	X	X	X	X		X	X		X
Auction house						C	X						X		X
Auto body repair / painting							X								X
Auto dealers							X								X
Auto repair/detailing						X	X	X							X
Auto rental & leasing						X	X	X	C	C					X
Auto wrecker service							X								X
Bakers, wholesale							X								X
Banks or financial services					X	X	X	X	X	C		X	C		X
Banquet hall					C	X	X	X	X	C			C		
Barbers / beauty salons /day spa					X	X	X	X	X	X	X	X	X		X
Bars						C	C		C	C	C	C			C
Bed & breakfast				C	X	X	X	X	X	X	X		X		X
Bingo parlor						C	C		C	C					C
Boat engine repair & service						C	X	X	C	X					X
Boat hull repair & construction						C	X	C	C	X					X
Boat rental								X	X	X	X		X		X
Boat sales						C	X	X	X	X			C*		X
Bowling alleys						C	X			C					X

Land Use Activity	R-LD	R-1	R-2	R-3	C-1	C-2	C-3	C-S	WAD	MMU	POD[2]	STCOD[3]	OS	MH	LI
Cabinet makers & millwork shops					X	X	X	X	C	X			X		X
Candy & confection, wholesale							X					X			X
Caterers					X	X	X	X	X	X			X		X
Cellular communications tower							C								X
Cemetery or mausoleum	C	C	C	C	C	C	C								X
Charter boat-service					C				X	X	X				
Child day care center					C	X	X					X	X		X
Child day care family home				C	C								X		
Church / place of worship	X	X	X	X	X	X	X	X	X	X	X	X	X	X	X
Cigar lounge						X	X	X	X	X	X	X			X
Cigar & tobacco shop						X	X	X	X	X	X	X			X
Civic club						C	C	C	C	C			C		C
Commercial automobile parking lot / garage						C	X				X				X
Computer sales & service					X	X	X	X	X	X		X	X		X
Contractors (with outside storage)							X			C			C		X
Contractors (without outside storage)						X	X			X			X		X
Convenience stores (without fuel pumps)					C	X	X	X	X	X		X	X		X
Copy & duplicating services					X	X	X	X	X	X		X	X		X
Dancehalls						C	C		C	C	C				X
Dance instruction					X	X	X	X	X	X		X	X		X
Delivery services						X	X	X		X	X				X
Dinner theatre						X	X		X	X		X	X		X
Domestic animal training schools						X	X	X							X
Dry cleaners (pickup only)					X	X	X	X	X	X		X	X		X
Electrical equipment & supplies, wholesale						C	X								X
Electronics manufacturer															X
Exterminators & pest control						X	X	X							X
Farm	X														X
Fish & seafood, retail					C	X	X	X	X	X	X		C		X
Fish & seafood, wholesale						C	X		X	X					X
Fraternal organizations						C	C		C						C
Funeral home / mortuary					C	X	X								X
Game rooms & billiard parlors						C	C		C	C	C	C			C
Gasoline service stations / convenience stores						X	X					X			X
Glass sales, tinting & replacement						X	X	X							X
Golf course/country club	C	C	X	X											X
Greenhouse						X	X								X
Gunsmiths						X	X	X	X	X			X		X
Health club					C	X	X		X	X		X	C		X
Heavy machinery sales							X								X
High rise (all uses within must be allowed per the zone)									X	C	C		C		

Land Use Activity	R-LD	R-1	R-2	R-3	C-1	C-2	C-3	C-S	WAD	MMU	POD[2]	STCOD[3]	OS	MH	LI
Hospice	C					X	X								X
Hospital						X	X								X
Hotels & motels (with full service restaurant)						X	X		X	X	X				X
Hotels & motels (without full service restaurant)						C	C		C	C	C				C
Janitorial services & supplies						X	X	X				X			X
Kennel, outdoor							X								X
Laundry, self-service						X	X	X	C	C		X			X
Limousine service					X	X	X	X	C						X
Machine shops & welding							X	X							X
Mailbox rentals					X	X	X	X	C	X		X	X		X
Mailing service , bulk					X	X	X	X	X	X			X		X
Manufacturing															X
Marina									X	X	X		C		
Medical emergency clinics (w/ambulance)										X		X			X
Medical equipment and supplies						X	X	X		X		X			X
Medical laboratories					C	X	X	X							X
Monastery or convent	C			C		C	C								C
Motion picture theatre						X	X		C			X			X
Motorcycle sales & repair						C	X	X							X
Museums					C	C	X		X	X	X		X		X
Nurseries					X	X	X	X					X		X
Nursing homes	C			X	C	C									X
Office, professional					X	X	X	X	X	X	X	X	X		X
Open air market (all uses must be allowed per the zone)													C		
Pawnbrokers						X	X	X							X
Personal care home (assisted living)				X	X	X	X						C		X
Pet shops (Indoor kennels only)					X	X	X	X	X	X		X	X		X
Printers							X	X							X
Private clubs (as per TABC)						C	C		C	C	C				C
Private schools					X	X	X			X			X		X
Public use (governmental)	X	X	X	X	X	X	X	X	X	X	X	X	X	X	X
Pumps, industrial sales and service							X								X
Quick lube/oil change						X	X	X				X			X
Radio/television transmission tower (commercial)										C					X
Recreational vehicle park															C
Recreational vehicle sales, rental & repair							X								X
Recycling center															C
Rental service store (no heavy equipment)						X	X	X							X
Rental, trucks & heavy equipment							X								X
Restaurant equipment & supplies						X	X	X							X
Restaurants					C	X	X	X	X	X	X	X	X		X

Land Use Activity	R-LD	R-1	R-2	R-3	C-1	C-2	C-3	C-S	WAD	MMU	POD[2]	STCOD[3]	OS	MH	LI
Retail, heavy						X	X	X	X	X		X			X
Retail, light					X	X	X	X	X	X	X	X	X		X
Sailmakers					X	X	X	X	X	X			X		X
Sexually oriented business															X
Shipyard									X	X					X
Signs, manufacturing							X	X							
Skating rinks						C	X			X					X
Small engine repair						X	X	X							X
Smoke & head shop							X								X
Sports and recreational arenas										C					X
Stables	C														X
Storage, auto; inside							X								X
Storage, auto; outside							C								
Storage, boat; inside							X	X	X	X					X
Storage, boat; outside							X			X					X
Swimming pool & spa sales & supplies					C	X	X	X	C			X			X
Tele-video production						X	X	X	X	X					X
Theatre					C	X	X		X	X	X	X			X
Tire dealers and service						X	X	X							X
Trucking company															X
Upholstery shop					C	X	X	X	X	X			X		X
Veterinarians & animal hospitals (no outside kennels)					C	X	X	X	X	X		X			X
Veterinarians (with outside kennels)							X								X
Warehouse															X
Warehouses, offices & mini							X			X					X
Woodwork shops						X	X	X	X	X			X		X
Yacht/sailing club									X	X			X		

[1] **A property is prohibited from having an accessory use/structure without the presence of a principal use/structure.**

[2] **Please reference Seabrook Code of Ordinances, Appendix A, Comprehensive Zoning, Section 4.15. The Point Overlay District Regulations, 4.15.04. Uses.**

[3] **Please reference Seabrook Code of Ordinances, Appendix A, Comprehensive Zoning, Section 4.16. Seabrook Town Center Overlay District Regulations, 4.16.04. Uses.**

CITY OF SEABROOK

AGENDA BRIEFING

Date of Meeting: June 21, 2016

Submitter/Requestor: Cook, Bice **Date Submitted:** June 15, 2016

Presenter: Cook

Description/Subject: Consider approval of Request for Proposal RFP 2016-17.

ISP Advisors, the City's Benefit Consultant, recommends renewal with BCBS (Medical - Option 1) for the FY 2016-17 plan year. The city went out to bid this year for plan start date of August 1, 2016 - July 31, 2017 for both health and dental benefits. Blue Cross Blue Shield (BCBS) and CIGNA were the 2 bidders for health insurance.

BCBS submitted a renegotiated rate which is a competitive renewal (within 5%) against market projections. While CIGNA had one set of plan designs slightly lower than BCBS, it could be a disadvantage to the City of Seabrook to change carriers again. Last year, the city had United Healthcare and switched to BCBS with a -11% decrease in rates. By maintaining our relationship with this carrier, we can preserve and build upon our history not to mention the disruption that is caused to employees when a complete new carrier is introduced during open enrollment.

As a consistent measure to design plans around financial sustainability and employee preferences, the City of Seabrook is proposing (3) options in this bid award:

1. Buy Up Plan PPO $750 Ind/$2,250 Fam 80%/20%
2. CORE Plan PPO $1,500 Ind/$4,500 Fam 80%/20%
3 Health Savings Plan $3,500 Ind/$7,000 Fam 0% /100% to Deductible

Wellness:
The City of Seabrook will continue a push for wellness with a required Biometric screening for employees. Those who do not wish to see their PCP and show proof of a wellness screening will be charged an additional $100/month.

City Contribution
The City of Seabrook contributes 100% to employee only health benefits in the CORE Plan with a 60% supplement to the dependent portion of costs.on the CORE Plan. The Buy Up Plan is an option to the employee with the cost differential back to the employees.

.

Name of Applicant (if applicable) :

Legal Description (if applicable):

Purpose/Need: Policy Issue

Background/Issue (What prompted this need?)**:** Annual renewal of employee insurance

Impacted Parties (Expected/Notified)**:** Full Time - City Employees

Miscellaneous Comments:

Recommended Action: Approve

Attachments: Agenda Briefing
Presentation by IPS - RFP Analysis and Plan Options
Plan Design Spec Sheets

Fiscal Impact:

Finance Officer Review	☒ Yes	☐ No
Budgeted	☒ Yes	☐ No
Budget Amendment Required	☐ Yes	☒ No

Budget Dept/Line Item Number: ***-3120
Future/Ongoing Impact: FY 15-16 will be impacted for August and September ; FY16-17 will be impacted through July 31, 2017, and Finance will estimate a slight increase again for the remaider of the new fiscal due to the dates of the current contract

Funding Comments: By selecting the alternate Option 1 negotiated, the City of Seabrook would experience a 20% increse overall in rates

14% City Contribution - Blended Rate among all plans
6% Employee Contribution - Blended Rate among all plans

*With personnel changes, the anticipated overall true impact for Health Insurance will be for FY 16-17 approximately 8-9% increase

As a review of the City's experience:
FY 14-15 11.91 increase
FY 15-16 -11.39 decrease
FY 16-17 14.00 increase (City Contribution).

All requests must be submitted to the City Secretary's Office no later than 12:00 p.m. on the Monday, one week prior to the regular Tuesday Council Meeting. All required attachments are to be submitted with the request. Incomplete items cannot be placed on the agenda.

Where on the agenda should this item be placed? Bid Awards

Suggested Motion: Approve

(All items are to be reviewed and approved by the city manager, except items submitted by the mayor or any council member or routine consent agenda items such as minutes and second & third readings of ordinances.)

Sent to City Attorney for review on

Approved by City Attorney on
(City Attorney should review all ordinances, resolutions, contracts and executive session items.)

All requests must be submitted to the City Secretary's Office no later than 12:00 p.m. on the Monday, one week prior to the regular Tuesday Council Meeting. All required attachments are to be submitted with the request. Incomplete items cannot be placed on the agenda.

$62.88

City of Seabrook

2016-2017 Rates - Option 1

**** The census below reflects a forecast of most migrating back to the CORE Plan**

Buy Up Plan

Enrollment		Unit Costs				Total Employee Cost			
PPO Plan $ 750 Ind / 80% / $3,000 OOP	Full Time Employees	Medical Rate	City Contribution ($)	City Contribution (%)	Employee Contribution ($)	Total Employee Contribution Monthly ($)	Per Pay Period	Change From Current Monthly Core ($)	Change From Current Core Monthly (%)
Employee	14	$646.02	$583.14	90.3%	$62.88	$62.88	$31.44	$37.80	150.7%
+ Spouse	1	$974.19	$527.60	54.2%	$446.59	$509.47	$254.73	$162.51	46.8%
+ Children	2	$544.17	$294.80	54.2%	$249.37	$312.25	$156.12	$107.37	52.4%
+ Family	2	$1,426.15	$772.37	54.2%	$653.78	$716.66	$358.33	$220.36	44.4%
Premium Contributions	14	$167,509.32	$129,911.04	77.6%	$37,598.28				

Core Plan

Enrollment		Unit Costs				Total Employee Cost			
PPO Plan $1,500 Ind / 80% / $3,000 OOP	Full Time Employees	Medical Rate	City Contribution ($)	City Contribution (%)	Employee Contribution ($)	Total Employee Contribution Monthly ($)	Per Pay Period	Change From Current Monthly Core ($)	Change From Current Core Monthly (%)
Employee	56	$583.14	$583.14	100.0%	$0.00	$0.00	$0.00	$0.00	0.0%
+ Spouse	2	$879.34	$527.60	60.0%	$351.74	$351.74	$175.87	$61.46	21.2%
+ Children	10	$491.34	$294.80	60.0%	$196.54	$196.54	$98.27	$34.40	21.2%
+ Family	7	$1,287.29	$772.37	60.0%	$514.92	$514.92	$257.46	$89.98	21.2%
Premium Contributions	56	$580,067.40	$504,788.38	87.0%	$75,279.02				

Enrollment		Unit Costs								Total Employee Cost			
HSA Plan $3,500 Ind / 100% / $0 OOP	Full Time Employees	Medical Rate	HSA Contribtion	Total Rate With HSA	City Contribution of Medical Rate	City Contribution of HSA	Total Contribution With HSA	City Contribution of Medical Rate (%)	Employee Contribution ($)	Total Employee Contribution Monthly ($)		Change From Current Monthly Core ($)	Change From Current Core Monthly (%)
Employee	11	$448.07	$104.17	$552.24	$448.07	$104.17	$552.24	100.0%	$0.00	$0.00		$0.00	0.0%
+ Spouse	1	$675.71	$104.17	$779.88	$405.43	$104.17	$509.59	60.0%	$270.28	$270.28		$50.72	23.1%
+ Children	2	$377.45	$104.17	$481.62	$226.47	$104.17	$330.64	60.0%	$150.98	$150.98		$28.32	23.1%
+ Family	1	$989.20	$104.17	$1,093.37	$593.52	$104.17	$697.69	60.0%	$395.68	$395.68		$74.24	23.1%
Premium Contributions	11	$88,182.96	$18,750.00	$106,932.96	$76,567.87	$18,750.00	$95,317.87	86.8%	$11,615.09				
HSA Contributions $1,250 Individual, $2,500 Family						1250.04							

All Plans	Full Time Employees	Total Medical Cost	City Contribution ($)	City Contribution (%)	Employee Contribution ($)
Total Contributions - All Plans	81	$854,509.68	$730,017.29	85.4%	$124,492.39
$ Change from Current		$97,607.28	$90,830.90		$6,775.99
% Change from Current		12.90%	14.21%		5.76%

$97,606.90

BlueCross BlueShield MM03	BlueCross BlueShield MM14	BlueCross BlueShield MMH9 HSA
Renegotiated Renewal	Renegotiated Renewal	Renegotiated Renewal
$646.02	$583.14	$448.07
$1,620.21	$1,462.48	$1,123.78
$1,190.19	$1,074.48	$825.52
$2,072.17	$1,870.43	$1,437.27

Blue Choice PPO MM05

Coverage Period: 01/01/2016 - 12/31/2016

Summary of Benefits and Coverage: What this Plan Covers & What it Costs

Coverage for: Individual/Family | **Plan Type:** PPO

This is only a summary. If you want more detail about your coverage and costs, you can get the complete terms in the policy or plan document at www.bcbstx.com/member/policy-forms/ or by calling 1-800-521-2227.

Important Questions	Answers	Why this Matters:
What is the overall deductible?	Network: **$750** Individual/**$2,250** Family. Out-of-Network: **$1,500** Individual/**$4,500** Family. Doesn't apply to In-Network preventive care, In-Network office visits, or prescription drugs. Copays and prescription drug costs don't count toward the overall deductible.	You must pay all the costs up to the **deductible** amount before this plan begins to pay for covered services you use. Check your policy or plan document to see when the **deductible** starts over (usually, but not always, January 1st). See the chart starting on page 3 for how much you pay for covered services after you meet the **deductible**.
Are there other deductibles for specific services?	No.	You don't have to meet **deductibles** for specific services, but see the chart starting on page 3 for other costs for services this plan covers.
Is there an out-of-pocket limit on my expenses?	Yes. Network: **$3,750** Individual/**$10,200** Family. Out-of-Network: **$7,500** Individual/**$22,500** Family. Rx Out-of-Pocket expense limit: **$1,000** Individual/**$3,000** Family.	The **out-of-pocket** limit is the most you could pay during a coverage period (usually one year) for your share of the cost of covered services. This limit helps you plan for health care expenses.
What is not included in the out-of-pocket limit?	Premiums, balance-billed charges, and health care this plan doesn't cover.	Even though you pay these expenses, they don't count toward the **out-of-pocket limit**.
Does this plan use a network of providers?	Yes. See www.bcbstx.com or call **1-800-810-2583** for a list of Network Providers.	If you use an in-network doctor or other health care **provider**, this plan will pay some or all of the costs of covered services. Be aware, your in-network doctor or hospital may use an out-of-network **provider** for some services. Plans use the term in-network, **preferred**, or participating for **providers** in their **network**. See the chart starting on page 3 for how this plan pays different kinds of **providers**.
Do I need a referral to see a specialist?	No. You don't need a referral to see a specialist.	You can see the **specialist** you choose without permission from this plan.

Questions: Call **1-800-521-2227** or visit us at www.bcbstx.com/coverage

If you aren't clear about any of the underlined terms used in this form, see the Glossary. You can view the Glossary at www.dol.gov/ebsa/pdf/SBCUniformGlossary.pdf or call 1-855-756-4448 to request a copy.

Blue Cross and Blue Shield of Texas, a Division of Health Care Service Corporation, a Mutual Legal Reserve Company, an Independent Licensee of the Blue Cross and Blue Shield Association

Important Questions	Answers	Why this Matters:
Are there services this plan doesn't cover?	Yes.	Some of the services this plan doesn't cover are listed on page 5. See your policy or plan document for additional information about **excluded services**.

- **Copayments** are fixed dollar amounts (for example, $15) you pay for covered health care, usually when you receive the service.
- **Coinsurance** is *your* share of the costs of a covered service, calculated as a percent of the **allowed amount** for the service. For example, if the health plan's **allowed amount** for an overnight hospital stay is $1,000, your **coinsurance** payment of 20% would be $200. This may change if you haven't met your **deductible**.
- The amount the plan pays for covered services is based on the **allowed amount**. If an out-of-network **provider** charges more than the **allowed amount**, you may have to pay the difference. For example, if an out-of-network hospital charges $1,500 for an overnight stay and the **allowed amount** is $1,000, you may have to pay the $500 difference. (This is called **balance billing**.)
- The plan may encourage you to use Network **providers** by charging you lower **deductibles**, **copayments**, and **coinsurance** amounts.

Common Medical Event	Services You May Need	Your cost if you use a Network Provider	Your cost if you use an Out-of-Network Provider	Limitations & Exceptions
If you visit a health care provider's office or clinic	Primary care visit to treat an injury or illness	$20 copay/visit	30% coinsurance	---none---
	Specialist visit	$20 copay/visit	30% coinsurance	
	Other practitioner office visit	$20 copay/visit	30% coinsurance	
	Preventive care/screening/immunization	No Charge	30% coinsurance	There is No Charge for Out-of-Network immunizations from birth through the day of the 6th birthday.
If you have a test	Diagnostic test (x-ray, blood work)	No Charge	30% coinsurance	---none---
	Imaging (CT/PET scans, MRIs)	20% coinsurance	40% coinsurance	
If you need drugs to treat your illness or condition More information about **prescription drug coverage** is available at www.bcbstx.com/member/rx_drugs.html	Generic drugs	$15 copay/prescription	20% coinsurance plus copay	One copay per 30-day supply - up to a 90-day supply for generic and brand drugs, up to a 30-day supply for specialty drugs. Payment of the difference between the cost of a brand name drug and a generic may also be required if a generic drug is available. Certain women's preventive services will be covered with no cost to the member. Rx Out-of-Pocket expense limit: $1,000 Individual/$3,000 Family.
	Preferred brand drugs	$30 copay/prescription	20% coinsurance plus copay	
	Non-preferred brand drugs	$45 copay/prescription	20% coinsurance plus copay	
	Specialty drugs	$15/$30/$45 copay/prescription	20% coinsurance plus copay	

Common Medical Event	Services You May Need	Your cost if you use a Network Provider	Your cost if you use an Out-of-Network Provider	Limitations & Exceptions
If you have outpatient surgery	Facility fee (e.g., ambulatory surgery center)	20% coinsurance	40% coinsurance	---none---
	Physician/surgeon fees	20% coinsurance	40% coinsurance	
If you need immediate medical attention	Emergency room services	20% coinsurance after $100 copay/visit	20% coinsurance after $100 copay/visit	Copay amount waived if admitted.
	Emergency medical transportation	20% coinsurance	20% coinsurance	---none---
	Urgent care	$45 copay/visit	30% coinsurance	
If you have a hospital stay	Facility fee (e.g., hospital room)	20% coinsurance	40% coinsurance	Preauthorization required Out-of-Network; failure to preauthorize at least two business days prior to admission will result in $250 reduction in benefits.
	Physician/surgeon fee	20% coinsurance	40% coinsurance	---none---
If you have mental health, behavioral health, or substance abuse needs	Mental/behavioral health outpatient services	$20 copay for office visits or 20% coinsurance for other outpatient services	40% coinsurance	Outpatient: Preauthorization required for psychological testing, neuropsychological testing, electroconvulsive therapy, repetitive transcranial magnetic stimulation, and intensive outpatient treatment; failure to preauthorize at least two business days prior to service will result in 50% reduction in benefits (not to exceed $500). Inpatient: Preauthorization required Out-of-Network; failure to preauthorize at least two business days prior to admission will result in $250 reduction in benefits.
	Mental/behavioral health inpatient services	20% coinsurance	40% coinsurance	
	Substance use disorder outpatient services	$20 copay for office visits or 20% coinsurance for other outpatient services	40% coinsurance	
	Substance use disorder inpatient services	20% coinsurance	40% coinsurance	
If you are pregnant	Prenatal and postnatal care	$20 copay/visit	30% coinsurance	Copay applies to first prenatal visit (per pregnancy).
	Delivery and all inpatient services	20% coinsurance	40% coinsurance	---none---

Common Medical Event	Services You May Need	Your cost if you use a Network Provider	Your cost if you use an Out-of-Network Provider	Limitations & Exceptions
If you need help recovering or have other special health needs	Home health care	No Charge	30% coinsurance	60 visit maximum per benefit period. Preauthorization required Out-of-Network; failure to preauthorize at least two business days prior to service will result in 50% reduction in benefits (not to exceed $500).
	Rehabilitation services	20% coinsurance	40% coinsurance	Limited to combined 35 visits per year, including Chiropractic.
	Habilitation services	20% coinsurance	40% coinsurance	
	Skilled nursing care	No Charge	30% coinsurance	25 day maximum per benefit period. Preauthorization required Out-of-Network; failure to preauthorize at least two business days prior to admission will result in $250 reduction in benefits.
	Durable medical equipment	20% coinsurance	40% coinsurance	---none---
	Hospice service	No Charge	30% coinsurance	Preauthorization required Out-of-Network; failure to preauthorize at least two business days prior to admission will result in $250 reduction in benefits.
If your child needs dental or eye care	Eye exam	Not Covered	Not Covered	---none---
	Glasses	Not Covered	Not Covered	
	Dental check-up	Not Covered	Not Covered	

Excluded Services & Other Covered Services:

Services Your Plan Does NOT Cover (This isn't a complete list. Check your policy or plan document for other excluded services.)

- Abortions
- Acupuncture
- Bariatric surgery
- Cosmetic surgery
- Dental care (Adult)
- Long term care
- Private duty nursing
- Weight loss programs

Other Covered Services (This isn't a complete list. Check your policy or plan document for other covered services and your costs for these services.)		
• Chiropractic care • Hearing aids	• Infertility treatment (Invitro and artificial insemination are not covered unless shown in your plan document) • Non-emergency care when traveling outside the U.S.	• Routine eye care (Adult and Child) • Routine foot care (Only covered in connection with diabetes, circulatory disorders of the lower extremities, peripheral vascular disease, peripheral neuropathy, or chronic arterial or venous insufficiency)

Your Rights to Continue Coverage:

If you lose coverage under the plan, then, depending upon the circumstances, Federal and State laws may provide protections that allow you to keep health coverage. Any such rights may be limited in duration and will require you to pay a **premium**, which may be significantly higher than the premium you pay while covered under the plan. Other limitations on your rights to continue coverage may also apply.
For more information on your rights to continue coverage, contact the plan at 1-800-521-2227. You may also contact your state insurance department, the U.S. Department of Labor, Employee Benefits Security Administration at 1-866-444-3272 or www.dol.gov/ebsa, or the U.S. Department of Health and Human Services at 1-877-267-2323 x61565 or www.cciio.cms.gov.

Your Grievance and Appeals Rights:

If you have a complaint or are dissatisfied with a denial of coverage for claims under your plan, you may be able to **appeal** or file a **grievance**. For questions about your rights, this notice, or assistance, you can contact Blue Cross and Blue Shield of Texas at 1-800-521-2227 or visit www.bcbstx.com, or contact U.S. Department of Labor's Employee Benefits Security Administration at 1-866-444-EBSA (3272) or visit www.dol.gov/ebsa/healthreform.

Does this Coverage Provide Minimum Essential Coverage?

The Affordable Care Act requires most people to have health care coverage that qualifies as "minimum essential coverage." **This plan or policy does provide minimum essential coverage.**

Does this Coverage Meet the Minimum Value Standard?

The Affordable Care Act establishes a minimum value standard of benefits of a health plan. The minimum value standard is 60% (actuarial value). **This health coverage does meet the minimum value standard for the benefits it provides.**

Language Access Services:

Spanish (Español): Para obtener asistencia en Español, llame al 1-800-521-2227.
Tagalog (Tagalog): Kung kailangan ninyo ang tulong sa Tagalog tumawag sa 1-800-521-2227.
Chinese (中文): 如果需要中文的帮助，请拨打这个号码 1-800-521-2227.
Navajo (Dine): Dinek'ehgo shika at'ohwol ninisingo, kwiijigo holne' 1-800-521-2227.

To see examples of how this plan might cover costs for a sample medical situation, see the next page.

About These Coverage Examples:

These examples show how this plan might cover medical care in given situations. Use these examples to see, in general, how much financial protection a sample patient might get if they are covered under different plans.

This is not a cost estimator.

Don't use these examples to estimate your actual costs under the plan. The actual care you receive will be different from these examples, and the cost of that care also will be different.

See the next page for important information about these examples.

Having a baby
(normal delivery)

- **Amount owed to providers:** $7,540
- **Plan pays** $5,520
- **Patient pays** $2,020

Sample care costs:

Hospital charges (mother)	$2,700
Routine obstetric care	$2,100
Hospital charges (baby)	$900
Anesthesia	$900
Laboratory tests	$500
Prescriptions	$200
Radiology	$200
Vaccines, other preventive	$40
Total	**$7,540**

Patient pays:

Deductibles	$500
Copays	$20
Coinsurance	$1,300
Limits or exclusions	$200
Total	**$2,020**

Managing type 2 diabetes
(routine maintenance of a well-controlled condition)

- **Amount owed to providers:** $5,400
- **Plan pays** $3,620
- **Patient pays** $1,780

Sample care costs:

Prescriptions	$2,900
Medical Equipment and Supplies	$1,300
Office Visits and Procedures	$700
Education	$300
Laboratory tests	$100
Vaccines, other preventive	$100
Total	**$5,400**

Patient pays:

Deductibles	$500
Copays	$1,000
Coinsurance	$200
Limits or exclusions	$80
Total	**$1,780**

Questions and answers about Coverage Examples:

What are some of the assumptions behind the Coverage Examples?

- Costs don't include **premiums**.
- Sample care costs are based on national averages supplied by the U.S. Department of Health and Human Services, and aren't specific to a particular geographic area or health plan.
- The patient's condition was not an excluded or preexisting condition.
- All services and treatments started and ended in the same coverage period.
- There are no other medical expenses for any member covered under this plan.
- Out-of-pocket expenses are based only on treating the condition in the example.
- The patient received all care from in-network **providers**. If the patient had received care from out-of-network **providers**, costs would have been higher.

What does a Coverage Example show?

For each treatment situation, the Coverage Example helps you see how **deductibles**, **copayments**, and **coinsurance** can add up. It also helps you see what expenses might be left up to you to pay because the service or treatment isn't covered or payment is limited.

Does the Coverage Example predict my own care needs?

✗ **No**. Treatments shown are just examples. The care you would receive for this condition could be different based on your doctor's advice, your age, how serious your condition is, and many other factors.

Does the Coverage Example predict my future expenses?

✗ **No**. Coverage Examples are **not** cost estimators. You can't use the examples to estimate costs for an actual condition. They are for comparative purposes only. Your own costs will be different depending on the care you receive, the prices your **providers** charge, and the reimbursement your health plan allows.

Can I use Coverage Examples to compare plans?

✓ **Yes**. When you look at the Summary of Benefits and Coverage for other plans, you'll find the same Coverage Examples. When you compare plans, check the "Patient Pays" box in each example. The smaller that number, the more coverage the plan provides.

Are there other costs I should consider when comparing plans?

✓ **Yes**. An important cost is the **premium** you pay. Generally, the lower your **premium**, the more you'll pay in out-of-pocket costs, such as **copayments**, **deductibles**, and **coinsurance**. You should also consider contributions to accounts such as health savings accounts (HSAs), flexible spending arrangements (FSAs) or health reimbursement accounts (HRAs) that help you pay out-of-pocket expenses.

BlueCross BlueShield of Texas

Blue Choice PPO MM16

Coverage Period: 01/01/2016 - 12/31/2016

Summary of Benefits and Coverage: What this Plan Covers & What it Costs

Coverage for: Individual/Family | **Plan Type:** PPO

This is only a summary. If you want more detail about your coverage and costs, you can get the complete terms in the policy or plan document at www.bcbstx.com/member/policy-forms/ or by calling 1-800-521-2227.

Important Questions	Answers	Why this Matters:
What is the overall deductible?	For Network **$1,500** Individual/**$4,500** Family. For Out-of-Network **$3,000** Individual/**$9,000** Family. Preventive care, copays, and prescription drugs do not apply to the Network deductible.	You must pay all the costs up to the **deductible** amount before this plan begins to pay for covered services you use. Check your policy or plan document to see when the **deductible** starts over (usually, but not always, January 1st). See the chart starting on page 2 for how much you pay for covered services after you meet the **deductible**.
Are there other deductibles for specific services?	No.	You don't have to meet **deductibles** for specific services, but see the chart starting on page 2 for other costs for services this plan covers.
Is there an out-of-pocket limit on my expenses?	Yes. For Network **$4,500** Individual/**$10,200** Family. For Out-of-Network **$9,000** Individual/**$27,000** Family. Rx Out-of-Pocket expense limit: **$1,000** Individual/**$3,000** Family.	The **out-of-pocket** limit is the most you could pay during a coverage period (usually one year) for your share of the cost of covered services. This limit helps you plan for health care expenses.
What is not included in the out-of-pocket limit?	Premiums, balance-billed charges, and health care this plan doesn't cover.	Even though you pay these expenses, they don't count toward the **out-of-pocket limit**.
Does this plan use a network of providers?	Yes. See www.bcbstx.com or call **1-800-810-2583** for a list of Network Providers.	If you use an in-network doctor or other health care **provider**, this plan will pay some or all of the costs of covered services. Be aware, your in-network doctor or hospital may use an out-of-network **provider** for some services. Plans use the term in-network, **preferred**, or participating for **providers** in their **network**. See the chart starting on page 2 for how this plan pays different kinds of **providers**.
Do I need a referral to see a specialist?	No. You don't need a referral to see a specialist.	You can see the **specialist** you choose without permission from this plan.
Are there services this plan doesn't cover?	Yes.	Some of the services this plan doesn't cover are listed on page 4. See your policy or plan document for additional information about **excluded services**.

Questions: Call **1-800-521-2227** or visit us at www.bcbstx.com/coverage

If you aren't clear about any of the underlined terms used in this form, see the Glossary. You can view the Glossary at www.dol.gov/ebsa/pdf/SBCUniformGlossary.pdf or call 1-855-756-4448 to request a copy.

Blue Cross and Blue Shield of Texas, a Division of Health Care Service Corporation, a Mutual Legal Reserve Company, an Independent Licensee of the Blue Cross and Blue Shield Association

- **Copayments** are fixed dollar amounts (for example, $15) you pay for covered health care, usually when you receive the service.
- **Coinsurance** is *your* share of the costs of a covered service, calculated as a percent of the **allowed amount** for the service. For example, if the health plan's **allowed amount** for an overnight hospital stay is $1,000, your **coinsurance** payment of 20% would be $200. This may change if you haven't met your **deductible**.
- The amount the plan pays for covered services is based on the **allowed amount**. If an out-of-network **provider** charges more than the **allowed amount**, you may have to pay the difference. For example, if an out-of-network hospital charges $1,500 for an overnight stay and the **allowed amount** is $1,000, you may have to pay the $500 difference. (This is called **balance billing**.)
- The plan may encourage you to use Network **providers** by charging you lower **deductibles**, **copayments**, and **coinsurance** amounts.

Common Medical Event	Services You May Need	Your cost if you use a Network Provider	Your cost if you use an Out-of-Network Provider	Limitations & Exceptions
If you visit a health care provider's office or clinic	Primary care visit to treat an injury or illness	$30 copay/visit	30% coinsurance	---none---
	Specialist visit	$30 copay/visit	30% coinsurance	
	Other practitioner office visit	$30 copay/visit	30% coinsurance	
	Preventive care/screening/immunization	No Charge	30% coinsurance	There is No Charge for Out-of-Network immunizations from birth through the day of the 6th birthday.
If you have a test	Diagnostic test (x-ray, blood work)	No Charge	30% coinsurance	---none---
	Imaging (CT/PET scans, MRIs)	20% coinsurance	40% coinsurance	
If you need drugs to treat your illness or condition More information about **prescription drug coverage** is available at www.bcbstx.com/member/rx_drugs.html	Generic drugs	$20 copay/prescription	20% coinsurance plus copay	One copay per 30-day supply - up to a 90-day supply for generic and brand drugs, up to a 30-day supply for specialty drugs. Payment of the difference between the cost of a brand name drug and a generic may also be required if a generic drug is available. Certain women's preventive services will be covered with no cost to the member. Rx Out-of-Pocket expense limit: $1,000 Individual/$3,000 Family.
	Preferred brand drugs	$35 copay/prescription	20% coinsurance plus copay	
	Non-preferred brand drugs	$50 copay/prescription	20% coinsurance plus copay	
	Specialty drugs	$20/$35/$50 copay/prescription	20% coinsurance plus copay	

Common Medical Event	Services You May Need	Your cost if you use a Network Provider	Your cost if you use an Out-of-Network Provider	Limitations & Exceptions
If you have outpatient surgery	Facility fee (e.g., ambulatory surgery center)	20% coinsurance	40% coinsurance	---none---
	Physician/surgeon fees	20% coinsurance	40% coinsurance	
If you need immediate medical attention	Emergency room services	20% coinsurance after $100 copay/visit	20% coinsurance after $100 copay/visit	Copay amount waived if admitted.
	Emergency medical transportation	20% coinsurance	20% coinsurance	---none---
	Urgent care	$55 copay/visit	30% coinsurance	
If you have a hospital stay	Facility fee (e.g., hospital room)	20% coinsurance	40% coinsurance	Preauthorization required Out-of-Network; failure to preauthorize at least two business days prior to admission will result in $250 reduction in benefits.
	Physician/surgeon fee	20% coinsurance	40% coinsurance	---none---
If you have mental health, behavioral health, or substance abuse needs	Mental/behavioral health outpatient services	$30 copay for office visits or 20% coinsurance for other outpatient services	40% coinsurance	Outpatient: Preauthorization required for psychological testing, neuropsychological testing, electroconvulsive therapy, repetitive transcranial magnetic stimulation, and intensive outpatient treatment; failure to preauthorize at least two business days prior to service will result in 50% reduction in benefits (not to exceed $500). Inpatient: Preauthorization required Out-of-Network; failure to preauthorize at least two business days prior to admission will result in $250 reduction in benefits.
	Mental/behavioral health inpatient services	20% coinsurance	40% coinsurance	
	Substance use disorder outpatient services	$30 copay for office visits or 20% coinsurance for other outpatient services	40% coinsurance	
	Substance use disorder inpatient services	20% coinsurance	40% coinsurance	
If you are pregnant	Prenatal and postnatal care	$30 copay/visit	30% coinsurance	Copay applies to first prenatal visit (per pregnancy).
	Delivery and all inpatient services	20% coinsurance	40% coinsurance	---none---

Common Medical Event	Services You May Need	Your cost if you use a Network Provider	Your cost if you use an Out-of-Network Provider	Limitations & Exceptions
If you need help recovering or have other special health needs	Home health care	No Charge	30% coinsurance	60 visit maximum per benefit period. Preauthorization required Out-of-Network; failure to preauthorize at least two business days prior to service will result in 50% reduction in benefits (not to exceed $500).
	Rehabilitation services	20% coinsurance	40% coinsurance	Limited to combined 35 visits per year, including Chiropractic.
	Habilitation services	20% coinsurance	40% coinsurance	
	Skilled nursing care	No Charge	30% coinsurance	25 day maximum per benefit period. Preauthorization required Out-of-Network; failure to preauthorize at least two business days prior to admission will result in $250 reduction in benefits.
	Durable medical equipment	20% coinsurance	40% coinsurance	---none---
	Hospice service	No Charge	30% coinsurance	Preauthorization required Out-of-Network; failure to preauthorize at least two business days prior to admission will result in $250 reduction in benefits.
If your child needs dental or eye care	Eye exam	Not Covered	Not Covered	---none---
	Glasses	Not Covered	Not Covered	
	Dental check-up	Not Covered	Not Covered	

Excluded Services & Other Covered Services:

Services Your Plan Does NOT Cover (This isn't a complete list. Check your policy or plan document for other excluded services.)

- Abortions
- Acupuncture
- Bariatric surgery
- Cosmetic surgery
- Dental care (Adult)
- Long term care
- Private duty nursing
- Weight loss programs

Other Covered Services (This isn't a complete list. Check your policy or plan document for other covered services and your costs for these services.)		
• Chiropractic care • Hearing aids	• Infertility treatment (Invitro and artificial insemination are not covered unless shown in your plan document) • Non-emergency care when traveling outside the U.S.	• Routine eye care (Adult and Child) • Routine foot care (Only covered in connection with diabetes, circulatory disorders of the lower extremities, peripheral vascular disease, peripheral neuropathy, or chronic arterial or venous insufficiency)

Your Rights to Continue Coverage:

If you lose coverage under the plan, then, depending upon the circumstances, Federal and State laws may provide protections that allow you to keep health coverage. Any such rights may be limited in duration and will require you to pay a **premium**, which may be significantly higher than the premium you pay while covered under the plan. Other limitations on your rights to continue coverage may also apply.
For more information on your rights to continue coverage, contact the plan at 1-800-521-2227. You may also contact your state insurance department, the U.S. Department of Labor, Employee Benefits Security Administration at 1-866-444-3272 or www.dol.gov/ebsa, or the U.S. Department of Health and Human Services at 1-877-267-2323 x61565 or www.cciio.cms.gov.

Your Grievance and Appeals Rights:

If you have a complaint or are dissatisfied with a denial of coverage for claims under your plan, you may be able to **appeal** or file a **grievance**. For questions about your rights, this notice, or assistance, you can contact Blue Cross and Blue Shield of Texas at 1-800-521-2227 or visit www.bcbstx.com, or contact U.S. Department of Labor's Employee Benefits Security Administration at 1-866-444-EBSA (3272) or visit www.dol.gov/ebsa/healthreform.

Does this Coverage Provide Minimum Essential Coverage?

The Affordable Care Act requires most people to have health care coverage that qualifies as "minimum essential coverage." **This plan or policy does provide minimum essential coverage.**

Does this Coverage Meet the Minimum Value Standard?

The Affordable Care Act establishes a minimum value standard of benefits of a health plan. The minimum value standard is 60% (actuarial value). **This health coverage does meet the minimum value standard for the benefits it provides.**

Language Access Services:

Spanish (Español): Para obtener asistencia en Español, llame al 1-800-521-2227.
Tagalog (Tagalog): Kung kailangan ninyo ang tulong sa Tagalog tumawag sa 1-800-521-2227.
Chinese (中文): 如果需要中文的帮助，请拨打这个号码 1-800-521-2227.
Navajo (Dine): Dinek'ehgo shika at'ohwol ninisingo, kwiijigo holne' 1-800-521-2227.

To see examples of how this plan might cover costs for a sample medical situation, see the next page.

About These Coverage Examples:

These examples show how this plan might cover medical care in given situations. Use these examples to see, in general, how much financial protection a sample patient might get if they are covered under different plans.

This is not a cost estimator.

Don't use these examples to estimate your actual costs under the plan. The actual care you receive will be different from these examples, and the cost of that care also will be different.

See the next page for important information about these examples.

Having a baby
(normal delivery)

- **Amount owed to providers:** $7,540
- **Plan pays** $4,720
- **Patient pays** $2,820

Sample care costs:

Hospital charges (mother)	$2,700
Routine obstetric care	$2,100
Hospital charges (baby)	$900
Anesthesia	$900
Laboratory tests	$500
Prescriptions	$200
Radiology	$200
Vaccines, other preventive	$40
Total	**$7,540**

Patient pays:

Deductibles	$1,500
Copays	$20
Coinsurance	$1,100
Limits or exclusions	$200
Total	**$2,820**

Managing type 2 diabetes
(routine maintenance of a well-controlled condition)

- **Amount owed to providers:** $5,400
- **Plan pays** $2,820
- **Patient pays** $2,580

Sample care costs:

Prescriptions	$2,900
Medical Equipment and Supplies	$1,300
Office Visits and Procedures	$700
Education	$300
Laboratory tests	$100
Vaccines, other preventive	$100
Total	**$5,400**

Patient pays:

Deductibles	$1,500
Copays	$800
Coinsurance	$200
Limits or exclusions	$80
Total	**$2,580**

Questions and answers about Coverage Examples:

What are some of the assumptions behind the Coverage Examples?

- Costs don't include **premiums**.
- Sample care costs are based on national averages supplied by the U.S. Department of Health and Human Services, and aren't specific to a particular geographic area or health plan.
- The patient's condition was not an excluded or preexisting condition.
- All services and treatments started and ended in the same coverage period.
- There are no other medical expenses for any member covered under this plan.
- Out-of-pocket expenses are based only on treating the condition in the example.
- The patient received all care from in-network **providers**. If the patient had received care from out-of-network **providers**, costs would have been higher.

What does a Coverage Example show?

For each treatment situation, the Coverage Example helps you see how **deductibles**, **copayments**, and **coinsurance** can add up. It also helps you see what expenses might be left up to you to pay because the service or treatment isn't covered or payment is limited.

Does the Coverage Example predict my own care needs?

✗ **No**. Treatments shown are just examples. The care you would receive for this condition could be different based on your doctor's advice, your age, how serious your condition is, and many other factors.

Does the Coverage Example predict my future expenses?

✗ **No**. Coverage Examples are **not** cost estimators. You can't use the examples to estimate costs for an actual condition. They are for comparative purposes only. Your own costs will be different depending on the care you receive, the prices your **providers** charge, and the reimbursement your health plan allows.

Can I use Coverage Examples to compare plans?

✓ **Yes**. When you look at the Summary of Benefits and Coverage for other plans, you'll find the same Coverage Examples. When you compare plans, check the "Patient Pays" box in each example. The smaller that number, the more coverage the plan provides.

Are there other costs I should consider when comparing plans?

✓ **Yes**. An important cost is the **premium** you pay. Generally, the lower your **premium**, the more you'll pay in out-of-pocket costs, such as **copayments**, **deductibles**, and **coinsurance**. You should also consider contributions to accounts such as health savings accounts (HSAs), flexible spending arrangements (FSAs) or health reimbursement accounts (HRAs) that help you pay out-of-pocket expenses.

BlueChoice BlueEdge HSA MMH9

Coverage Period: 01/01/2016 - 12/31/2016

Summary of Benefits and Coverage: What this Plan Covers & What it Costs

Coverage for: Individual/Family | **Plan Type:** HSA

This is only a summary. If you want more detail about your coverage and costs, you can get the complete terms in the policy or plan document at www.bcbstx.com/member/policy-forms/ or by calling 1-800-521-2227.

Important Questions	Answers	Why this Matters:
What is the overall deductible?	Network: **$3,500** Individual/**$7,000** Family. Out-of-Network: **$7,000** Individual/**$14,000** Family. Doesn't apply to In-Network preventive care.	You must pay all the costs up to the **deductible** amount before this plan begins to pay for covered services you use. Check your policy or plan document to see when the **deductible** starts over (usually, but not always, January 1st). See the chart starting on page 2 for how much you pay for covered services after you meet the **deductible**.
Are there other deductibles for specific services?	No.	You don't have to meet **deductibles** for specific services, but see the chart starting on page 2 for other costs for services this plan covers.
Is there an out-of-pocket limit on my expenses?	Yes. Network: **$3,500** Individual/**$7,000** Family. Out-of-Network: **$14,000** Individual/**$28,000** Family.	The **out-of-pocket** limit is the most you could pay during a coverage period (usually one year) for your share of the cost of covered services. This limit helps you plan for health care expenses.
What is not included in the out-of-pocket limit?	Preauthorization penalties, premiums, balance-billed charges, and health care this plan doesn't cover.	Even though you pay these expenses, they don't count toward the **out-of-pocket limit**.
Does this plan use a network of providers?	Yes. See www.bcbstx.com or call **1-800-810-2583** for a list of Network Providers.	If you use an in-network doctor or other health care **provider**, this plan will pay some or all of the costs of covered services. Be aware, your in-network doctor or hospital may use an out-of-network **provider** for some services. Plans use the term in-network, **preferred**, or participating for **providers** in their **network**. See the chart starting on page 2 for how this plan pays different kinds of **providers**.
Do I need a referral to see a specialist?	No. You don't need a referral to see a specialist.	You can see the **specialist** you choose without permission from this plan.
Are there services this plan doesn't cover?	Yes.	Some of the services this plan doesn't cover are listed on page 5. See your policy or plan document for additional information about **excluded services**.

Questions: Call **1-800-521-2227** or visit us at www.bcbstx.com/coverage

If you aren't clear about any of the underlined terms used in this form, see the Glossary. You can view the Glossary at www.dol.gov/ebsa/pdf/SBCUniformGlossary.pdf or call 1-855-756-4448 to request a copy.

Blue Cross and Blue Shield of Texas, a Division of Health Care Service Corporation, a Mutual Legal Reserve Company, an Independent Licensee of the Blue Cross and Blue Shield Association

- **Copayments** are fixed dollar amounts (for example, $15) you pay for covered health care, usually when you receive the service.
- **Coinsurance** is *your* share of the costs of a covered service, calculated as a percent of the **allowed amount** for the service. For example, if the health plan's **allowed amount** for an overnight hospital stay is $1,000, your **coinsurance** payment of 20% would be $200. This may change if you haven't met your **deductible**.
- The amount the plan pays for covered services is based on the **allowed amount**. If an out-of-network **provider** charges more than the **allowed amount**, you may have to pay the difference. For example, if an out-of-network hospital charges $1,500 for an overnight stay and the **allowed amount** is $1,000, you may have to pay the $500 difference. (This is called **balance billing**.)
- The plan may encourage you to use Network **providers** by charging you lower **deductibles**, **copayments**, and **coinsurance** amounts.

Common Medical Event	Services You May Need	Your cost if you use a Network Provider	Your cost if you use an Out-of-Network Provider	Limitations & Exceptions
If you visit a health care provider's office or clinic	Primary care visit to treat an injury or illness	No charge after deductible	30% coinsurance	---none---
	Specialist visit	No charge after deductible	30% coinsurance	
	Other practitioner office visit	No charge after deductible	30% coinsurance	
	Preventive care/screening/immunization	No Charge	30% coinsurance	There is No Charge for Out-of-Network immunizations from birth through the day of the 6th birthday.
If you have a test	Diagnostic test (x-ray, blood work)	No charge after deductible	30% coinsurance	---none---
	Imaging (CT/PET scans, MRIs)	No charge after deductible	30% coinsurance	

Common Medical Event	Services You May Need	Your cost if you use a Network Provider	Your cost if you use an Out-of-Network Provider	Limitations & Exceptions
If you need drugs to treat your illness or condition More information about **prescription drug coverage** is available at www.bcbstx.com/member/rx_drugs.html	Preferred generic drugs	No charge after deductible	No charge after deductible	Up to a 90-day supply for generic and brand drugs. Up to a 30-day supply for specialty drugs. Certain women's preventive services will be covered with no cost to the member.
	Non-preferred generic drugs	No charge after deductible	No charge after deductible	
	Preferred brand drugs	No charge after deductible	No charge after deductible	
	Non-preferred brand drugs	No charge after deductible	No charge after deductible	
	Specialty drugs	No charge after deductible	No charge after deductible	
If you have outpatient surgery	Facility fee (e.g., ambulatory surgery center)	No charge after deductible	30% coinsurance	---none---
	Physician/surgeon fees	No charge after deductible	30% coinsurance	
If you need immediate medical attention	Emergency room services	No charge after deductible	No charge after deductible	---none---
	Emergency medical transportation	No charge after deductible	No charge after deductible	
	Urgent care	No charge after deductible	30% coinsurance	
If you have a hospital stay	Facility fee (e.g., hospital room)	No charge after deductible	30% coinsurance	Preauthorization required Out-of-Network; failure to preauthorize at least two business days prior to admission will result in $250 reduction in benefits.
	Physician/surgeon fee	No charge after deductible	30% coinsurance	---none---

Common Medical Event	Services You May Need	Your cost if you use a Network Provider	Your cost if you use an Out-of-Network Provider	Limitations & Exceptions
If you have mental health, behavioral health, or substance abuse needs	Mental/behavioral health outpatient services	No charge after deductible	30% coinsurance	Outpatient: Preauthorization required for psychological testing, neuropsychological testing, electroconvulsive therapy, repetitive transcranial magnetic stimulation, and intensive outpatient treatment; failure to preauthorize at least two business days prior to service will result in 50% reduction in benefits (not to exceed $500). Inpatient: Preauthorization required Out-of-Network; failure to preauthorize at least two business days prior to admission will result in $250 reduction in benefits.
	Mental/behavioral health inpatient services	No charge after deductible	30% coinsurance	
	Substance use disorder outpatient services	No charge after deductible	30% coinsurance	
	Substance use disorder inpatient services	No charge after deductible	30% coinsurance	
If you are pregnant	Prenatal and postnatal care	No charge after deductible	30% coinsurance	---none---
	Delivery and all inpatient services	No charge after deductible	30% coinsurance	

Common Medical Event	Services You May Need	Your cost if you use a Network Provider	Your cost if you use an Out-of-Network Provider	Limitations & Exceptions
If you need help recovering or have other special health needs	Home health care	No charge after deductible	30% coinsurance	60 visit maximum per benefit period. Preauthorization required Out-of-Network; failure to preauthorize at least two business days prior to service will result in 50% reduction in benefits (not to exceed $500).
	Rehabilitation services	No charge after deductible	30% coinsurance	Limited to combined 35 visits per year, including Chiropractic.
	Habilitation services	No charge after deductible	30% coinsurance	
	Skilled nursing care	No charge after deductible	30% coinsurance	25 day maximum per benefit period. Preauthorization required Out-of-Network; failure to preauthorize at least two business days prior to admission will result in $250 reduction in benefits.
	Durable medical equipment	No charge after deductible	30% coinsurance	---none---
	Hospice service	No charge after deductible	30% coinsurance	Preauthorization required Out-of-Network; failure to preauthorize at least two business days prior to admission will result in $250 reduction in benefits.
If your child needs dental or eye care	Eye exam	Not Covered	Not Covered	---none---
	Glasses	Not Covered	Not Covered	
	Dental check-up	Not Covered	Not Covered	

Excluded Services & Other Covered Services:

Services Your Plan Does NOT Cover (This isn't a complete list. Check your policy or plan document for other excluded services.)

- Abortions
- Acupuncture
- Bariatric surgery
- Cosmetic surgery
- Dental care (Adult)
- Long term care
- Private duty nursing
- Weight loss programs

Other Covered Services (This isn't a complete list. Check your policy or plan document for other covered services and your costs for these services.)		
• Chiropractic care • Hearing aids	• Infertility treatment (Invitro and artificial insemination are not covered unless shown in your plan document) • Non-emergency care when traveling outside the U.S.	• Routine eye care (Adult and Child) • Routine foot care (Only covered in connection with diabetes, circulatory disorders of the lower extremities, peripheral vascular disease, peripheral neuropathy, or chronic arterial or venous insufficiency)

Your Rights to Continue Coverage:

If you lose coverage under the plan, then, depending upon the circumstances, Federal and State laws may provide protections that allow you to keep health coverage. Any such rights may be limited in duration and will require you to pay a **premium**, which may be significantly higher than the premium you pay while covered under the plan. Other limitations on your rights to continue coverage may also apply.
For more information on your rights to continue coverage, contact the plan at 1-800-521-2227. You may also contact your state insurance department, the U.S. Department of Labor, Employee Benefits Security Administration at 1-866-444-3272 or www.dol.gov/ebsa, or the U.S. Department of Health and Human Services at 1-877-267-2323 x61565 or www.cciio.cms.gov.

Your Grievance and Appeals Rights:

If you have a complaint or are dissatisfied with a denial of coverage for claims under your plan, you may be able to **appeal** or file a **grievance**. For questions about your rights, this notice, or assistance, you can contact Blue Cross and Blue Shield of Texas at 1-800-521-2227 or visit www.bcbstx.com, or contact U.S. Department of Labor's Employee Benefits Security Administration at 1-866-444-EBSA (3272) or visit www.dol.gov/ebsa/healthreform.

Does this Coverage Provide Minimum Essential Coverage?

The Affordable Care Act requires most people to have health care coverage that qualifies as "minimum essential coverage." **This plan or policy does provide minimum essential coverage.**

Does this Coverage Meet the Minimum Value Standard?

The Affordable Care Act establishes a minimum value standard of benefits of a health plan. The minimum value standard is 60% (actuarial value). **This health coverage does meet the minimum value standard for the benefits it provides.**

Language Access Services:

Spanish (Español): Para obtener asistencia en Español, llame al 1-800-521-2227.
Tagalog (Tagalog): Kung kailangan ninyo ang tulong sa Tagalog tumawag sa 1-800-521-2227.
Chinese (中文): 如果需要中文的帮助，请拨打这个号码 1-800-521-2227.
Navajo (Dine): Dinek'ehgo shika at'ohwol ninisingo, kwiijigo holne' 1-800-521-2227.

To see examples of how this plan might cover costs for a sample medical situation, see the next page.

About These Coverage Examples:

These examples show how this plan might cover medical care in given situations. Use these examples to see, in general, how much financial protection a sample patient might get if they are covered under different plans.

This is not a cost estimator.

Don't use these examples to estimate your actual costs under the plan. The actual care you receive will be different from these examples, and the cost of that care also will be different.

See the next page for important information about these examples.

Having a baby
(normal delivery)

- **Amount owed to providers:** $7,540
- **Plan pays** $3,840
- **Patient pays** $3,700

Sample care costs:

Hospital charges (mother)	$2,700
Routine obstetric care	$2,100
Hospital charges (baby)	$900
Anesthesia	$900
Laboratory tests	$500
Prescriptions	$200
Radiology	$200
Vaccines, other preventive	$40
Total	**$7,540**

Patient pays:

Deductibles	$3,500
Copays	$0
Coinsurance	$0
Limits or exclusions	$200
Total	**$3,700**

Managing type 2 diabetes
(routine maintenance of a well-controlled condition)

- **Amount owed to providers:** $5,400
- **Plan pays** $1,820
- **Patient pays** $3,580

Sample care costs:

Prescriptions	$2,900
Medical Equipment and Supplies	$1,300
Office Visits and Procedures	$700
Education	$300
Laboratory tests	$100
Vaccines, other preventive	$100
Total	**$5,400**

Patient pays:

Deductibles	$3,500
Copays	$0
Coinsurance	$0
Limits or exclusions	$80
Total	**$3,580**

Questions and answers about Coverage Examples:

What are some of the assumptions behind the Coverage Examples?

- Costs don't include **premiums**.
- Sample care costs are based on national averages supplied by the U.S. Department of Health and Human Services, and aren't specific to a particular geographic area or health plan.
- The patient's condition was not an excluded or preexisting condition.
- All services and treatments started and ended in the same coverage period.
- There are no other medical expenses for any member covered under this plan.
- Out-of-pocket expenses are based only on treating the condition in the example.
- The patient received all care from in-network **providers**. If the patient had received care from out-of-network **providers**, costs would have been higher.

What does a Coverage Example show?

For each treatment situation, the Coverage Example helps you see how **deductibles**, **copayments**, and **coinsurance** can add up. It also helps you see what expenses might be left up to you to pay because the service or treatment isn't covered or payment is limited.

Does the Coverage Example predict my own care needs?

✗ **No**. Treatments shown are just examples. The care you would receive for this condition could be different based on your doctor's advice, your age, how serious your condition is, and many other factors.

Does the Coverage Example predict my future expenses?

✗ **No**. Coverage Examples are **not** cost estimators. You can't use the examples to estimate costs for an actual condition. They are for comparative purposes only. Your own costs will be different depending on the care you receive, the prices your **providers** charge, and the reimbursement your health plan allows.

Can I use Coverage Examples to compare plans?

✓ **Yes**. When you look at the Summary of Benefits and Coverage for other plans, you'll find the same Coverage Examples. When you compare plans, check the "Patient Pays" box in each example. The smaller that number, the more coverage the plan provides.

Are there other costs I should consider when comparing plans?

✓ **Yes**. An important cost is the **premium** you pay. Generally, the lower your **premium**, the more you'll pay in out-of-pocket costs, such as **copayments**, **deductibles**, and **coinsurance**. You should also consider contributions to accounts such as health savings accounts (HSAs), flexible spending arrangements (FSAs) or health reimbursement accounts (HRAs) that help you pay out-of-pocket expenses.

CITY OF SEABROOK

AGENDA BRIEFING

Date of Meeting: June 21, 2016

Submitter/Requestor: Cook, Bice **Date Submitted:** June 15, 2016

Presenter: Cook

Description/Subject: Consider approval of Request for Proposal RFP 2016-17 Dental Insurance Renewal

ISP Advisors, the City's Benefit Consultant, recommends renewal with Aetna Dental Freedom of Choice for the FY 2016-17 plan year and remaining FY 2015-16.. This current contract with Aetna Dental and the city would be expiring July 31, 2016; therefore the city went out to bid this year for plan start date of August 1, 2016 - July 31, 2017 for dental benefits.

The City received four (4) bidders: Aetna, BCBS, Lincoln, and CIGNA. While Aetna was not the apparent low bidder, when the analysis was completed on the plan design, the employees would lose several options in the other offered designs. The structure of the Freedom of Choice is the most beneficial plan option that the other carriers do not offer.

This option allows employs to stay in one tier (DMO) if only maintenance and cleaning are required with an option to change in any month without penalty and use only select tier

BCBS submitted a renewal rate which is a competitive renewal (within 5%) against market projections.

City Contribution
The City of Seabrook contributes 100% to employee only dental benefits in the CORE Plan with employees paying 100% of the dependent portion of costs.

.

Name of Applicant (if applicable) :

Legal Description (if applicable):

Purpose/Need: Policy Issue

Background/Issue (What prompted this need?)**:** Annual renewal of employee dental insurance

Impacted Parties (Expected/Notified)**:** Full Time - City Employees

Miscellaneous Comments:

Recommended Action: Approve

Attachments: Agenda Briefing
Presentation by IPS - RFP Analysis and Plan Options

Fiscal Impact:

Finance Officer Review	☒ Yes	☐ No
Budgeted	☒ Yes	☐ No
Budget Amendment Required	☐ Yes	☒ No

Budget Dept/Line Item Number: ***-3120
Future/Ongoing Impact: FY 15-16 will be impacted for August and September ; FY16-17 will be impacted through July 31, 2017, and Finance will estimate a slight increase again for the remaider of the new fiscal due to the dates of the current contract

Funding Comments:

Where on the agenda should this item be placed? Bid Awards

Suggested Motion: Approve

(All items are to be reviewed and approved by the city manager, except items submitted by the mayor or any council member or routine consent agenda items such as minutes and second & third readings of ordinances.)

Sent to City Attorney for review on

Approved by City Attorney on
(City Attorney should review all ordinances, resolutions, contracts and executive session items.)

All requests must be submitted to the City Secretary's Office no later than 12:00 p.m. on the Monday, one week prior to the regular Tuesday Council Meeting. All required attachments are to be submitted with the request. Incomplete items cannot be placed on the agenda.

CITY OF SEABROOK

AGENDA BRIEFING

Date of Meeting: June 21, 2016

Submitter/Requestor: Kevin Padgett **Date Submitted:** 06-13-16

Presenter: Kevin Padgett/Arthur Chairez

Description/Subject: Bid Award for Waterline Improvement Project No. 2016-03

Name of Applicant (if applicable) : N/A

Legal Description (if applicable): Contract

Purpose/Need: Policy Issue

Background/Issue (What prompted this need?)**:** Needed Infrastructure Improvements

Impacted Parties (Expected/Notified)**:** Citizens, Council, Public Works

Miscellaneous Comments: This project will provide water line improvements at two separate locations. The first will be located at Todville and Meyer where we will replace an existing steel section of 12-inch water line that has been repaired multiple times due to leaks within that section of pipe. The second location will be along the south side of Red Bluff Rd. from old Hwy 146 to the southwest corner of Red Bluff and Bayview Dr. The existing water line servicing the area is a 2 inch thin wall plastic line that in some areas is located in the middle of Red Bluff Road. The new main will be upsized to an 8-inch water line with fire hydrants.

Recommended Action: Award contract to low bidder Statewide Services, Inc.

Attachments: Engineer Recommendation Letter, Bid Tabulation and Exhibit Map.

Fiscal Impact:

Finance Officer Review	☐ Yes	☐ No
Budgeted	☒ Yes	☐ No
Budget Amendment Required	☐ Yes	☐ No

Budget Dept/Line Item Number: 902-6090 & Impact Fees
Future/Ongoing Impact:

Funding Comments:

Where on the agenda should this item be placed? Bid Awards

Suggested Motion: Award bid to low bidder Statewide Services, Inc. in the amount of $157,435.00

(All items are to be reviewed and approved by the city manager, except items submitted by the mayor or any council member or routine consent agenda items such as minutes and second & third readings of ordinances.)

Sent to City Attorney for review on

Approved by City Attorney on
(City Attorney should review all ordinances, resolutions, contracts and executive session items.)

All requests must be submitted to the City Secretary's Office no later than 12:00 p.m. on the Monday, one week prior to the regular Tuesday Council Meeting. All required attachments are to be submitted with the request. Incomplete items cannot be placed on the agenda.

CobbFendley

June 15, 2016

Mr. Arthur Chairez
Director of Public Works
City of Seabrook
1700 First Street
Seabrook, Texas 77586

Re: **Recommendation of Award**
2016 Water Line Improvements
Seabrook Project No. 2016-03

Dear Mr. Chairez,

Bids for the referenced project were received on June 13, 2016 and a tabulation of those is attached to this letter. The low bid was submitted by ***Statewide Services, Inc.*** Based on our review of the bids and qualifications of the bidder, we recommend award of the contract to ***Statewide Services, Inc.*** for a total Bid Price of **$157,435.00.** If you have any questions or require additional information, I can be contacted at 713-462-3242.

Sincerely,

COBB, FENDLEY & ASSOCIATES, INC.

Brad Matlock, P.E.
Principal

cc: Gayle Cook, City of Seabrook
File

Attachment

1920 Country Place Parkway, Suite 310 | Pearland, Texas 77584 | 281.993.4952 | fax 281.993.8086 | www.cobbfendley.com

Client: City of Seabrook
Project Name: 2016 WATERLINE IMPROVEMENT PROJECT
BID DATE: JUNE 13, 2016

				Bidder No.1		Bidder No.2		Bidder No.3		Bidder No.4		Bidder No.5		Bidder No.6		Bidder No.7		Bidder No.8	
				STATEWIDE SERVICES		RAC INDUSTRIES, LLC		ECHELON CONTRACTORS, LLC		MMG CONTRACTORS, LLC		RESICOM, INC.		BIG STATE EXCAVATION, INC.		D. GRIMM, INC.		R.L. UTILITIES, INC.	
ITEM NO.	ITEM DESCRIPTION	UNIT	UNIT QTY	UNIT PRICE	TOTAL AMOUNT	UNIT PRICE	TOTAL AMOUNT	UNIT PRICE	TOTAL AMOUNT	UNIT PRICE	TOTAL AMOUNT	UNIT PRICE	TOTAL AMOUNT	UNIT PRICE	TOTAL AMOUNT	UNIT PRICE	TOTAL AMOUNT	UNIT PRICE	TOTAL AMOUNT
	RED BLUFF ROAD																		
	SECTION 1 - SITE PREPARATION FOR EARTH WORK																		
1	Mobilization (No Greater Than 5% of Total Bid)	LS	1	$ 3,000.00	$ 3,000.00	$ 5,130.00	$ 5,130.00	$ 5,000.00	$ 5,000.00	$ 5,000.00	$ 5,000.00	$ 4,500.00	$ 4,500.00	$ 6,300.00	$ 6,300.00	$ 7,501.48	$ 7,501.48	$ 7,900.00	$ 7,900.00
	SUBTOTAL SECTION 1				**$ 3,000.00**		**$ 5,130.00**		**$ 5,000.00**		**$ 5,000.00**		**$ 4,500.00**		**$ 6,300.00**		**$ 7,501.48**		**$ 7,900.00**
	SECTION 2 - WATER DISTRIBUTION SYSTEM																		
2	8-Inch PVC C-900 Water Line Pipe by Open Cut Construction, Including Mechanical Joint Fittings (All	LF	1,192	$ 33.00	$ 39,336.00	$ 40.70	$ 48,514.40	$ 50.00	$ 59,600.00	$ 48.00	$ 57,216.00	$ 33.00	$ 39,336.00	$ 50.00	$ 59,600.00	$ 56.64	$ 67,514.88	$ 71.00	$ 84,632.00
3	8-Inch PVC C-900 Water Line Pipe by Trenchless Construction	LF	403	$ 51.00	$ 20,553.00	$ 40.70	$ 16,402.10	$ 55.00	$ 22,165.00	$ 44.00	$ 17,732.00	$ 35.00	$ 14,105.00	$ 100.00	$ 40,300.00	$ 97.50	$ 39,292.50	$ 68.00	$ 27,404.00
4	8-Inch Tapping Sleeve & Valve, Complete in Place	EA	2	$ 6,800.00	$ 13,600.00	$ 4,600.00	$ 9,200.00	$ 5,000.00	$ 10,000.00	$ 5,590.00	$ 11,180.00	$ 6,000.00	$ 12,000.00	$ 3,800.00	$ 7,600.00	$ 3,825.58	$ 7,651.16	$ 7,500.00	$ 15,000.00
5	8-Inch Gate Valve and Box, Complete in Place	EA	1	$ 1,600.00	$ 1,600.00	$ 1,290.00	$ 1,290.00	$ 1,000.00	$ 1,000.00	$ 1,745.00	$ 1,745.00	$ 1,300.00	$ 1,300.00	$ 1,200.00	$ 1,200.00	$ 1,590.83	$ 1,590.83	$ 1,985.00	$ 1,985.00
6	Fire Hydrant Assembly, Including Tee, Lead & 6-Inch Gate Valve and Megalug Restraint Joint, Complete in Place	EA	2	$ 4,100.00	$ 8,200.00	$ 3,800.00	$ 7,600.00	$ 4,100.00	$ 8,200.00	$ 4,472.00	$ 8,944.00	$ 4,400.00	$ 8,800.00	$ 4,700.00	$ 9,400.00	$ 4,777.58	$ 9,555.16	$ 4,950.00	$ 9,900.00
7	2" cut and plug	EA	2	$ 350.00	$ 700.00	$ 150.00	$ 300.00	$ 680.00	$ 1,360.00	$ 86.00	$ 172.00	$ 400.00	$ 800.00	$ 190.00	$ 380.00	$ 256.41	$ 512.82	$ 750.00	$ 1,500.00
8	1" Water Tap and Service Line Installation, (Short Side), Includes Tap, Sleeve, Corporation Stop, Service Line, and Meter, Complete in Place and Operational	EA	6	$ 425.00	$ 2,550.00	$ 920.00	$ 5,520.00	$ 560.00	$ 3,360.00	$ 504.00	$ 3,024.00	$ 700.00	$ 4,200.00	$ 1,200.00	$ 7,200.00	$ 896.38	$ 5,378.28	$ 950.00	$ 5,700.00
9	1" Water Tap and Service Line Installation, (Long Side), Includes Tap, Sleeve, Corporation Stop, Service Line, and Meter, Complete in Place and Operational	EA	2	$ 720.00	$ 1,440.00	$ 1,265.00	$ 2,530.00	$ 800.00	$ 1,600.00	$ 862.00	$ 1,724.00	$ 900.00	$ 1,800.00	$ 2,500.00	$ 5,000.00	$ 1,396.23	$ 2,792.46	$ 1,800.00	$ 3,600.00
	SUBTOTAL SECTION 2				**$ 87,979.00**		**$ 91,356.50**		**$ 107,285.00**		**$ 101,737.00**		**$ 82,341.00**		**$ 130,680.00**		**$ 134,288.09**		**$ 149,721.00**
	SECTION 3 - SWPPP																		
10	Erosion/Sediment Control in Accordance with TPDES Requirements, Including Notice of Intent (NOI) and Notice of Termination (NOT)	LS	1	$ 1,250.00	$ 1,250.00	$ 500.00	$ 500.00	$ 330.00	$ 330.00	$ 1,200.00	$ 1,200.00	$ 1,900.00	$ 1,900.00	$ 1,600.00	$ 1,600.00	$ 1,337.77	$ 1,337.77	$ 750.00	$ 750.00
11	SWPPP Inspection and Maintenance, and Reporting	LS	1	$ 1,500.00	$ 1,500.00	$ 690.00	$ 690.00	$ 75.00	$ 75.00	$ 1,500.00	$ 1,500.00	$ 1,500.00	$ 1,500.00	$ 2,500.00	$ 2,500.00	$ 700.77	$ 700.77	$ 500.00	$ 500.00
12	Furnish, Install, and Remove Reinforced Filter Fabric Fence, Complete in Place	LF	240	$ 1.60	$ 384.00	$ 3.00	$ 720.00	$ 0.25	$ 60.00	$ 1.00	$ 240.00	$ 3.00	$ 720.00	$ 4.00	$ 960.00	$ 1.89	$ 453.60	$ 7.00	$ 1,680.00
13	Sodding for Erosion Control (Block Sodding), Complete in place	SY	640	$ 5.00	$ 3,200.00	$ 6.00	$ 3,840.00	$ 0.25	$ 160.00	$ 5.00	$ 3,200.00	$ 5.00	$ 3,200.00	$ 5.00	$ 3,200.00	$ 5.73	$ 3,667.20	$ 3.00	$ 1,920.00
	SUBTOTAL SECTION 3				**$ 6,334.00**		**$ 5,750.00**		**$ 625.00**		**$ 6,140.00**		**$ 7,320.00**		**$ 8,260.00**		**$ 6,159.34**		**$ 4,850.00**
	SECTION 4 - TRAFFIC CONTROL AND REGULATION																		
14	Traffic Control and Regulation, in Accordance with Drawings and Specifications	LS	1	$ 6,500.00	$ 6,500.00	$ 1,380.00	$ 1,380.00	$ 1,000.00	$ 1,000.00	$ 5,000.00	$ 5,000.00	$ 16,000.00	$ 16,000.00	$ 6,000.00	$ 6,000.00	$ 9,554.33	$ 9,554.33	$ 2,400.00	$ 2,400.00
	SUBTOTAL SECTION 4				**$ 6,500.00**		**$ 1,380.00**		**$ 1,000.00**		**$ 5,000.00**		**$ 16,000.00**		**$ 6,000.00**		**$ 9,554.33**		**$ 2,400.00**
	TODVILLE ROAD																		
	SECTION 1 - SITE PREPARATION FOR EARTH WORK																		
15	Mobilization (No Greater Than 5% of Total Bid)	LS	1	$ 3,000.00	$ 3,000.00	$ 2,630.00	$ 2,630.00	$ 2,800.00	$ 2,800.00	$ 2,500.00	$ 2,500.00	$ 2,500.00	$ 2,500.00	$ 3,000.00	$ 3,000.00	$ 2,700.00	$ 2,700.00	$ 2,300.00	$ 2,300.00
	SUBTOTAL SECTION 1				**$ 3,000.00**		**$ 2,630.00**		**$ 2,800.00**		**$ 2,500.00**		**$ 2,500.00**		**$ 3,000.00**		**$ 2,700.00**		**$ 2,300.00**
	SECTION 2 - WATER DISTRIBUTION SYSTEM																		
16	8-Inch PVC C-900 Water Line Pipe by Open Cut Construction, Including Mechanical Joint Fittings (All Depths)	LF	30	$ 42.00	$ 1,260.00	$ 46.80	$ 1,404.00	$ 54.00	$ 1,620.00	$ 59.00	$ 1,770.00	$ 33.00	$ 990.00	$ 80.00	$ 2,400.00	$ 55.52	$ 1,665.60	$ 36.00	$ 1,080.00
17	12-Inch PVC C-900 Water Line Pipe by Open Cut Construction, including Mechanical Joint Fittings (All Depths)	LF	240	$ 65.00	$ 15,600.00	$ 108.00	$ 25,920.00	$ 100.00	$ 24,000.00	$ 81.00	$ 19,440.00	$ 81.00	$ 19,440.00	$ 90.00	$ 21,600.00	$ 74.72	$ 17,932.80	$ 81.00	$ 19,440.00
18	12-Inch PVC C-900 Water Line Pipe by Trenchless Construction	LF	90	$ 75.00	$ 6,750.00	$ 93.70	$ 8,433.00	$ 100.00	$ 9,000.00	$ 71.00	$ 6,390.00	$ 86.00	$ 7,740.00	$ 165.00	$ 14,850.00	$ 143.84	$ 12,945.60	$ 56.00	$ 5,040.00
19	8-Inch Gate Valve and Box, Complete in Place	EA	1	$ 1,650.00	$ 1,650.00	$ 1,290.00	$ 1,290.00	$ 950.00	$ 950.00	$ 1,745.00	$ 1,745.00	$ 1,300.00	$ 1,300.00	$ 1,200.00	$ 1,200.00	$ 1,518.03	$ 1,518.03	$ 1,950.00	$ 1,950.00
20	12-Inch Tapping Sleeve & Valve, Complete in Place	EA	1	$ 8,000.00	$ 8,000.00	$ 6,555.00	$ 6,555.00	$ 6,400.00	$ 6,400.00	$ 6,890.00	$ 6,890.00	$ 8,000.00	$ 8,000.00	$ 5,000.00	$ 5,000.00	$ 6,548.21	$ 6,548.21	$ 6,000.00	$ 6,000.00
21	Fire Hydrant Assembly, Including Tee, Lead & 6-Inch Gate Valve and Megalug Restraint Joint, Complete in Place	EA	1	$ 4,600.00	$ 4,600.00	$ 3,800.00	$ 3,800.00	$ 4,000.00	$ 4,000.00	$ 4,692.00	$ 4,692.00	$ 4,400.00	$ 4,400.00	$ 4,700.00	$ 4,700.00	$ 4,637.21	$ 4,637.21	$ 4,250.00	$ 4,250.00
22	12" Cut and plug	EA	2	$ 700.00	$ 1,400.00	$ 1,270.00	$ 2,540.00	$ 160.00	$ 320.00	$ 265.00	$ 530.00	$ 900.00	$ 1,800.00	$ 600.00	$ 1,200.00	$ 481.75	$ 963.50	$ 2,000.00	$ 4,000.00
23	12-Inch Wet Connection	EA	1	$ 750.00	$ 750.00	$ 2,040.00	$ 2,040.00	$ 320.00	$ 320.00	$ 1,470.00	$ 1,470.00	$ 1,200.00	$ 1,200.00	$ 2,100.00	$ 2,100.00	$ 699.12	$ 699.12	$ 3,500.00	$ 3,500.00
	SUBTOTAL SECTION 2				**$ 40,010.00**		**$ 51,982.00**		**$ 46,610.00**		**$ 42,927.00**		**$ 44,870.00**		**$ 53,050.00**		**$ 46,910.07**		**$ 45,260.00**
	SECTION 3 - SWPPP																		
24	Erosion/Sediment Control in Accordance with TPDES Requirements, Including Notice of Intent (NOI) and Notice of Termination (NOT)	LS	1	$ 1,240.00	$ 1,240.00	$ 500.00	$ 500.00	$ 330.00	$ 330.00	$ 1,200.00	$ 1,200.00	$ 1,900.00	$ 1,900.00	$ 1,500.00	$ 1,500.00	$ 1,337.77	$ 1,337.77	$ 650.00	$ 650.00
25	SWPPP Inspection and Maintenance, and Reporting	LS	1	$ 1,500.00	$ 1,500.00	$ 690.00	$ 690.00	$ 75.00	$ 75.00	$ 1,500.00	$ 1,500.00	$ 1,500.00	$ 1,500.00	$ 2,500.00	$ 2,500.00	$ 700.77	$ 700.77	$ 650.00	$ 650.00
26	Furnish, Install, and Remove Reinforced Filter Fabric Fence, Complete in Place	LF	120	$ 1.60	$ 192.00	$ 3.00	$ 360.00	$ 0.25	$ 30.00	$ 1.00	$ 120.00	$ 3.00	$ 360.00	$ 4.00	$ 480.00	$ 1.89	$ 226.80	$ 10.00	$ 1,200.00
27	Furnish, Install, and Remove Inlet protection Barrier	EA	4	$ 45.00	$ 180.00	$ 46.00	$ 184.00	$ 26.00	$ 104.00	$ 50.00	$ 200.00	$ 120.00	$ 480.00	$ 50.00	$ 200.00	$ 49.77	$ 199.08	$ 900.00	$ 3,600.00
28	Sodding for Erosion Control (Block Sodding), St. Auoustine. Complete in Place	SY	300	$ 5.00	$ 1,500.00	$ 6.00	$ 1,800.00	$ 0.25	$ 75.00	$ 5.00	$ 1,500.00	$ 5.00	$ 1,500.00	$ 5.00	$ 1,500.00	$ 5.73	$ 1,719.00	$ 3.00	$ 900.00
	SUBTOTAL SECTION 3				**$ 4,612.00**		**$ 3,534.00**		**$ 614.00**		**$ 4,520.00**		**$ 5,740.00**		**$ 6,180.00**		**$ 4,183.42**		**$ 7,000.00**
	SECTION 4 - TRAFFIC CONTROL AND REGULATION																		
29	Traffic Control and Regulation, in Accordance with Drawings and Specifications	LS	1	$ 6,000.00	$ 6,000.00	$ 920.00	$ 920.00	$ 1,000.00	$ 1,000.00	$ 6,000.00	$ 6,000.00	$ 16,000.00	$ 16,000.00	$ 6,000.00	$ 6,000.00	$ 8,703.27	$ 8,703.27	$ 2,000.00	$ 2,000.00
	SUBTOTAL SECTION 4				**$ 6,000.00**		**$ 920.00**		**$ 1,000.00**		**$ 6,000.00**		**$ 16,000.00**		**$ 6,000.00**		**$ 8,703.27**		**$ 2,000.00**
	SUBTOTAL RED BLUFF ROAD				**$ 103,813.00**		**$ 103,616.50**		**$ 113,910.00**		**$ 117,877.00**		**$ 110,161.00**		**$ 151,240.00**		**$ 157,503.24**		**$ 164,871.00**
	SUBTOTAL TODVILLE ROAD				**$ 53,622.00**		**$ 59,066.00**		**$ 51,024.00**		**$ 55,947.00**		**$ 69,110.00**		**$ 68,230.00**		**$ 62,496.76**		**$ 56,560.00**
	TOTAL BID PRICE				**$ 157,435.00**		**$ 162,682.50**		**$ 164,934.00**		**$ 173,824.00**		**$ 179,271.00**		**$ 219,470.00**		**$ 220,000.00**		**$ 221,431.00**

2016 WATER LINE IMPROVEMENTS PROJECT

EXHIBIT B1
RED BLUFF ROAD

CobbFendley
Texas Registration No. 274
1506 E. Broadway, Suite 201
Pearland, Texas 77581
281.993.4952 | fax 281.993.6066
www.cobbfendley.com

SEABROOK

DATE: FEBRUARY 2016

2016 WATER LINE IMPROVEMENTS PROJECT

EXHIBIT B2
TODVILLE ROAD

CobbFendley
Texas Registration No. 274
1506 E. Broadway, Suite 201
Pearland, Texas 77581
281.993.4952 | fax 281.993.8086
www.cobbfendley.com

SEABROOK

DATE: FEBRUARY 2016

CERTIFICATE OF INTERESTED PARTIES

FORM 1295

Complete Nos. 1 - 4 and 6 if there are interested parties.
Complete Nos. 1, 2, 3, 5, and 6 if there are no interested parties.

OFFICE USE ONLY
CERTIFICATION OF FILING

Certificate Number:
2016-72659

Date Filed:
06/17/2016

Date Acknowledged:

1 Name of business entity filing form, and the city, state and country of the business entity's place of business.

Statewide Services, Inc
Houston, TX United States

2 Name of governmental entity or state agency that is a party to the contract for which the form is being filed.

City of Seabrook

3 Provide the identification number used by the governmental entity or state agency to track or identify the contract, and provide a description of the services, goods, or other property to be provided under the contract.

2016-03
Waterline Installation

4 Name of Interested Party	City, State, Country (place of business)	Nature of interest (check applicable)	
		Controlling	Intermediary

5 Check only if there is NO Interested Party. [X]

6 AFFIDAVIT

I swear, or affirm, under penalty of perjury, that the above disclosure is true and correct.

JENNIFER JOHNSON
Notary Public
STATE OF TEXAS
My Comm. Exp. May 5, 2017

AFFIX NOTARY STAMP / SEAL ABOVE

Signature of authorized agent of contracting business entity

Sworn to and subscribed before me, by the said Carnell Allison / President, this the 17th day of June, 20 16, to certify which, witness my hand and seal of office.

Signature of officer administering oath	Printed name of officer administering oath	Title of officer administering oath
	Jennifer Johnson	Office Admin.

CITY OF SEABROOK

AGENDA BRIEFING

Date of Meeting: June 21, 2016

Submitter/Requestor: Kevin Padgett **Date Submitted:** 06-13-16

Presenter: Kevin Padgett/Arthur Chairez

Description/Subject: Bid Award for Delabrook Court Paving Improvement Project No. 2016-06

Name of Applicant (if applicable) : N/A

Legal Description (if applicable): Contract

Purpose/Need: Policy Issue

Background/Issue (What prompted this need?)**:** This project is a continuing effort of the Public Works Street Management Program to improve the neighborhood streets throughout the city funded in part by the Sanitation Franchise Fee transfer for street repair & improvements.

Impacted Parties (Expected/Notified)**:** Citizens, Council, Public Works

Miscellaneous Comments: Street improvement will replace the existing old concrete pavement constructed in 1962 with new 6-inch concrete pavement and concrete curbs. Adjacent driveways along the street replacements will be removed and be replaced with 6-inch concrete up to the existing right-of-way.

Recommended Action: Award bid based on best value to second low bidder Precise Services, Inc

Attachments: Engineer Recommendation Letter, Bid Tabulation and Exhibit Map.

Fiscal Impact:

Finance Officer Review	☐ Yes	☐ No
Budgeted	☒ Yes	☐ No
Budget Amendment Required	☐ Yes	☐ No

Budget Dept/Line Item Number: 500-6065
Future/Ongoing Impact:

Funding Comments:

Where on the agenda should this item be placed? Bid Awards

Suggested Motion: Award bid to Precise Services, Inc. in the amount of $171,681.00

(All items are to be reviewed and approved by the city manager, except items submitted by the mayor or any council member or routine consent agenda items such as minutes and second & third readings of ordinances.)

Sent to City Attorney for review on

Approved by City Attorney on
(City Attorney should review all ordinances, resolutions, contracts and executive session items.)

All requests must be submitted to the City Secretary's Office no later than 12:00 p.m. on the Monday, one week prior to the regular Tuesday Council Meeting. All required attachments are to be submitted with the request. Incomplete items cannot be placed on the agenda.

CobbFendley

June 15, 2016

Mr. Arthur Chairez
Director of Public Works
City of Seabrook
1700 First Street
Seabrook, Texas 77586

Re: **Recommendation of Award**
Delabrook Court Paving Improvements
Seabrook Project No. 2016-06

Dear Mr. Chairez,

Bids for the referenced project were received on June 13, 2016 and a tabulation of those are attached to this letter. The low bid was submitted by ***First Katy Construction & Services.*** Based on our review of the bid by the low bidder, the bidder is not the best value to the City due to an error in their bid. After review of the next lowest bid and qualifications of the bidder, we recommend award of the contract to ***Precise Services, Inc.*** for a total Bid Price of **$171,681.00.** If you have any questions or require additional information, I can be contacted at 713-462-3242.

Sincerely,

COBB, FENDLEY & ASSOCIATES, INC.

Brad Matlock, P.E.
Principal

cc: Gayle Cook, City of Seabrook
File

Attachment

Client: City of Seabrook
Project Name: DELABROOK COURT PAVING IMPROVEMENT PROJECT
BID DATE: JUNE 13, 2016

					Bidder No.1		Bidder No.2		Bidder No.3		Bidder No.4		Bidder No.5		Bidder No.6		Bidder No.7		Bidder No.8		Bidder No.9		Bidder No.10		Bidder No.11	
					PRECISE SERVICES, INC.		RAC INDUSTRIES, LLC		LUCAS CONSTRUCTION COMPANY, INC.		FIRST KATY CONSTRUCTION & SERVICES		DVL ENTERPRISES, LLC		TANDEM SERVICES, LLC		D G MEDINA CONSTRUCTION, INC.		TRIPLE B SERVICES, LLP		EXCEL PAVING CONSTRUCTION		CNS CONSTRUCTION, LLC		A-1 CONSTRUCTION SERVICES	
Item No.	Spec. No.	Item Description	Unit	Quantity	Unit Price	Extended Price	Unit Price	Extended Price	Unit Price	Extended Price	Unit Price	Extended Price	Unit Price	Extended Price	Unit Price	Extended Price	Unit Price	Extended Price	Unit Price	Extended Price	Unit Price	Extended Price	Unit Price	Extended Price	Unit Price	Extended Price
BASE BID																										
SECTION 1 - SITE PREPARATION FOR EARTH WORK																										
1	01502	Mobilization (No Greater Than 5% of Total Bid)	LS	1	$ 8,365.08	$ 8,365.08	$ 7,000.00	$ 7,000.00	$ 8,000.00	$ 8,000.00	$ 8,500.00	$ 8,500.00	$ 9,000.00	$ 9,000.00	$ 8,500.00	$ 8,500.00	$ 11,000.00	$ 11,000.00	$ 6,500.00	$ 6,500.00	$ 12,102.68	$ 12,102.68	$ 16,000.00	$ 16,000.00	$ 15,500.00	$ 15,500.00
2	01562	Tree and Plant Protection	LS	1	$ 1,900.00	$ 1,900.00	$ 900.00	$ 900.00	$ 2,000.00	$ 2,000.00	$ 7,500.00	$ 7,500.00	$ 2,000.00	$ 2,000.00	$ 1,000.00	$ 1,000.00	$ 1,700.00	$ 1,700.00	$ 1,600.00	$ 1,600.00	$ 600.00	$ 600.00	$ 2,700.00	$ 2,700.00	$ 200.00	$ 200.00
3	02221	Remove and Dispose of Existing Concrete Pavement and Base (All Depths), Concrete Curbs and Gutters, and Paving Headers, Complete (Includes all Saw-Cutting Required)	SY	2,100	$ 4.00	$ 8,400.00	$ 6.00	$ 12,600.00	$ 9.00	$ 18,900.00	$ 3.75	$ 7,875.00	$ 10.00	$ 21,000.00	$ 9.00	$ 18,900.00	$ 6.20	$ 13,020.00	$ 7.00	$ 14,700.00	$ 14.29	$ 30,009.00	$ 11.35	$ 23,835.00	$ 23.00	$ 48,300.00
4	02221	Remove and Dispose of Existing Concrete Walkways and Driveways, Complete (Includes all Saw-Cutting Required)	SY	405	$ 3.25	$ 1,316.25	$ 1.00	$ 405.00	$ 9.00	$ 3,645.00	$ 3.24	$ 1,312.20	$ 10.00	$ 4,050.00	$ 9.00	$ 3,645.00	$ 18.00	$ 7,290.00	$ 7.50	$ 3,037.50	$ 9.87	$ 3,997.35	$ 11.35	$ 4,596.75	$ 23.00	$ 9,315.00
SUBTOTAL SECTION 1						**$ 19,981.33**		**$ 20,905.00**		**$ 32,545.00**		**$ 25,187.20**		**$ 36,050.00**		**$ 32,045.00**		**$ 33,010.00**		**$ 25,837.50**		**$ 46,709.03**		**$ 47,131.75**		**$ 73,315.00**
SECTION 2 - PAVING																										
5	02336	6" Manipulation of Lime Stabilized Subgrade, Complete	SY	1,750	$ 2.50	$ 4,375.00	$ 4.00	$ 7,000.00	$ 5.00	$ 8,750.00	$ 10.92	$ 19,110.00	$ 6.00	$ 10,500.00	$ 6.00	$ 10,500.00	$ 12.00	$ 21,000.00	$ 5.50	$ 9,625.00	$ 18.00	$ 31,500.00	$ 19.55	$ 34,212.50	$ 20.00	$ 35,000.00
6	02336	Type B, Commercial Lime Slurry (5% Lime by Dry Weight of Soil), Complete in Place	TON	20	$ 190.00	$ 3,800.00	$ 160.00	$ 3,200.00	$ 200.00	$ 4,000.00	$ -	$ -	$ 170.00	$ 3,400.00	$ 195.00	$ 3,900.00	$ 225.00	$ 4,500.00	$ 215.00	$ 4,300.00	$ 200.00	$ 4,000.00	$ 220.00	$ 4,400.00	$ 240.00	$ 4,800.00
7	02741	6" Black Base (Type B), Including Tack Coat, Complete in Place	TON	36	$ 125.00	$ 4,500.00	$ 140.00	$ 5,040.00	$ 100.00	$ 3,600.00	$ 127.83	$ 4,601.88	$ 120.00	$ 4,320.00	$ 290.00	$ 10,440.00	$ 281.50	$ 10,134.00	$ 165.00	$ 5,940.00	$ 186.11	$ 6,699.96	$ 305.00	$ 10,980.00	$ 350.00	$ 12,600.00
8	02741	2" HMAC, Complete in Place	TON	12	$ 125.00	$ 1,500.00	$ 300.00	$ 3,600.00	$ 200.00	$ 2,400.00	$ 221.50	$ 2,658.00	$ 300.00	$ 3,600.00	$ 290.00	$ 3,480.00	$ 273.50	$ 3,282.00	$ 265.00	$ 3,180.00	$ 333.33	$ 3,999.96	$ 305.00	$ 3,660.00	$ 430.00	$ 5,160.00
9	02751	6" Reinforced Concrete Pavement, Complete in Place	SY	1,650	$ 50.00	$ 82,500.00	$ 50.30	$ 82,995.00	$ 50.00	$ 82,500.00	$ 39.00	$ 64,350.00	$ 50.00	$ 82,500.00	$ 51.00	$ 84,150.00	$ 67.50	$ 111,375.00	$ 52.50	$ 86,625.00	$ 52.00	$ 85,800.00	$ 63.50	$ 104,775.00	$ 74.25	$ 122,512.50
10	02754	6" Reinforced Concrete Pavement for Driveways, Complete in Place	SF	3,575	$ 7.25	$ 25,918.75	$ 8.00	$ 28,600.00	$ 6.00	$ 21,450.00	$ 4.75	$ 16,981.25	$ 6.00	$ 21,450.00	$ 7.00	$ 25,025.00	$ 5.80	$ 20,735.00	$ 18.00	$ 64,350.00	$ 4.95	$ 17,696.25	$ 8.05	$ 28,778.75	$ 8.25	$ 29,493.75
11	02771	4"x12" Concrete Curb, Complete in Place	LF	900	$ 3.50	$ 3,150.00	$ 9.00	$ 8,100.00	$ 4.00	$ 3,600.00	$ 2.25	$ 2,025.00	$ 5.00	$ 4,500.00	$ 5.00	$ 4,500.00	$ 2.35	$ 2,115.00	$ 5.15	$ 4,635.00	$ 23.92	$ 21,528.00	$ 4.00	$ 3,600.00	$ 10.00	$ 9,000.00
12	02752	Concrete Pavement Header, Complete in Place	LF	28	$ 114.00	$ 3,192.00	$ 21.00	$ 588.00	$ 6.00	$ 168.00	$ 20.00	$ 560.00	$ 10.00	$ 280.00	$ 6.00	$ 168.00	$ 25.00	$ 700.00	$ 24.00	$ 672.00	$ 71.42	$ 1,999.76	$ 13.40	$ 375.20	$ 10.00	$ 280.00
13	02775	Type I Handicap Ramp, Complete in Place	EA	1	$ 1,000.00	$ 1,000.00	$ 1,380.00	$ 1,380.00	$ 1,000.00	$ 1,000.00	$ 1,250.00	$ 1,250.00	$ 2,000.00	$ 2,000.00	$ 900.00	$ 900.00	$ 1,250.00	$ 1,250.00	$ 3,400.00	$ 3,400.00	$ 800.00	$ 800.00	$ 2,000.00	$ 2,000.00	$ 1,500.00	$ 1,500.00
14	02775	4 1/2" Concrete Sidewalk, Complete in Place	SF	66	$ 27.50	$ 1,815.00	$ 8.10	$ 534.60	$ 10.00	$ 660.00	$ 4.75	$ 313.50	$ 10.00	$ 660.00	$ 7.00	$ 462.00	$ 6.00	$ 396.00	$ 33.50	$ 2,211.00	$ 12.12	$ 799.92	$ 6.70	$ 442.20	$ 24.00	$ 1,584.00
SUBTOTAL SECTION 2						**$ 131,750.75**		**$ 141,037.60**		**$ 128,128.00**		**$ 111,849.63**		**$ 133,210.00**		**$ 143,525.00**		**$ 175,487.00**		**$ 184,938.00**		**$ 174,823.85**		**$ 193,223.65**		**$ 221,930.25**
SECTION 3 - STORM SEWER																										
15	02631	24-Inch RCP (Type III), Complete in Place	LF	50	$ 120.00	$ 6,000.00	$ 75.00	$ 3,750.00	$ 100.00	$ 5,000.00	$ 84.00	$ 4,200.00	$ 100.00	$ 5,000.00	$ 120.00	$ 6,000.00	$ 90.00	$ 4,500.00	$ 95.00	$ 4,750.00	$ 124.20	$ 6,210.00	$ 210.00	$ 10,500.00	$ 200.00	$ 10,000.00
16	02751	Concrete Paving for Drainage Channels	SY	8	$ 140.00	$ 1,120.00	$ 230.00	$ 1,840.00	$ 100.00	$ 800.00	$ 187.50	$ 1,500.00	$ 200.00	$ 1,600.00	$ 60.00	$ 480.00	$ 100.00	$ 800.00	$ 500.00	$ 4,000.00	$ 375.00	$ 3,000.00	$ 135.00	$ 1,080.00	$ 500.00	$ 4,000.00
SUBTOTAL SECTION 3						**$ 7,120.00**		**$ 5,590.00**		**$ 5,800.00**		**$ 5,700.00**		**$ 6,600.00**		**$ 6,480.00**		**$ 5,300.00**		**$ 8,750.00**		**$ 9,210.00**		**$ 11,580.00**		**$ 14,000.00**
SECTION 4 - SWPPP																										
17	01410	Erosion/Sediment Control in Accordance with TPDES Requirements, Including Notice of Intent (NOI) and Notice of Termination (NOT)	EA	2	$ 219.00	$ 438.00	$ 520.00	$ 1,040.00	$ 1,000.00	$ 2,000.00	$ 700.00	$ 1,400.00	$ 500.00	$ 1,000.00	$ 750.00	$ 1,500.00	$ 542.00	$ 1,084.00	$ 720.00	$ 1,440.00	$ 2,200.00	$ 4,400.00	$ 335.00	$ 670.00	$ 150.00	$ 300.00
18	01410	SWPPP Inspection and Maintenance, and Reporting	LS	1	$ 1,200.00	$ 1,200.00	$ 1,035.00	$ 1,035.00	$ 2,000.00	$ 2,000.00	$ 3,000.00	$ 3,000.00	$ 500.00	$ 500.00	$ 900.00	$ 900.00	$ 1,539.00	$ 1,539.00	$ 2,150.00	$ 2,150.00	$ 1,200.00	$ 1,200.00	$ 670.00	$ 670.00	$ 200.00	$ 200.00
19	01570	Furnish and Install Inlet Protection Barrier (Stage I	EA	3	$ 71.00	$ 213.00	$ 46.00	$ 138.00	$ 100.00	$ 300.00	$ 266.66	$ 799.98	$ 50.00	$ 150.00	$ 40.00	$ 120.00	$ 68.00	$ 204.00	$ 0.01	$ 0.03	$ 400.00	$ 1,200.00	$ 100.00	$ 300.00	$ 75.00	$ 225.00
20	01570	Reinforced Filter Fabric Fence	LF	24	$ 1.58	$ 37.92	$ 2.30	$ 55.20	$ 10.00	$ 240.00	$ 20.85	$ 500.40	$ 5.00	$ 120.00	$ 4.00	$ 96.00	$ 1.50	$ 36.00	$ 4.30	$ 103.20	$ 16.66	$ 399.84	$ 6.70	$ 160.80	$ 2.00	$ 48.00
21	02922	Sodding for Erosion Control (Block Sodding), St. Augustine, Complete in Place	SY	280	$ 5.50	$ 1,540.00	$ 5.20	$ 1,456.00	$ 5.00	$ 1,400.00	$ 5.38	$ 1,506.40	$ 5.00	$ 1,400.00	$ 5.50	$ 1,540.00	$ 4.80	$ 1,344.00	$ 5.75	$ 1,610.00	$ 14.78	$ 4,138.40	$ 6.70	$ 1,876.00	$ 15.00	$ 4,200.00
SUBTOTAL SECTION 4						**$ 3,428.92**		**$ 3,724.20**		**$ 5,940.00**		**$ 7,206.78**		**$ 3,170.00**		**$ 4,156.00**		**$ 4,207.00**		**$ 5,303.23**		**$ 11,338.24**		**$ 3,676.80**		**$ 4,973.00**
SECTION 5 - TRAFFIC CONTROL AND REGULATION																										
22	01555	Traffic Control and Regulation, in Accordance with Drawings and Specifications, Complete	LS	1	$ 9,400.00	$ 9,400.00	$ 920.00	$ 920.00	$ 4,000.00	$ 4,000.00	$ 8,500.00	$ 8,500.00	$ 5,000.00	$ 5,000.00	$ 4,000.00	$ 4,000.00	$ 1,890.00	$ 1,890.00	$ 2,225.00	$ 2,225.00	$ 6,000.00	$ 6,000.00	$ 2,700.00	$ 2,700.00	$ 1,750.00	$ 1,750.00
SUBTOTAL SECTION 5						**$ 9,400.00**		**$ 920.00**		**$ 4,000.00**		**$ 8,500.00**		**$ 5,000.00**		**$ 4,000.00**		**$ 1,890.00**		**$ 2,225.00**		**$ 6,000.00**		**$ 2,700.00**		**$ 1,750.00**
SUBTOTAL SECTION 1						**$ 19,981.33**		**$ 20,905.00**		**$ 32,545.00**		**$ 25,187.20**		**$ 36,050.00**		**$ 32,045.00**		**$ 33,010.00**		**$ 25,837.50**		**$ 46,709.03**		**$ 47,131.75**		**$ 73,315.00**
SUBTOTAL SECTION 2						**$ 131,750.75**		**$ 141,037.60**		**$ 128,128.00**		**$ 111,849.63**		**$ 133,210.00**		**$ 143,525.00**		**$ 175,487.00**		**$ 184,938.00**		**$ 174,823.85**		**$ 193,223.65**		**$ 221,930.25**
SUBTOTAL SECTION 3						**$ 7,120.00**		**$ 5,590.00**		**$ 5,800.00**		**$ 5,700.00**		**$ 6,600.00**		**$ 6,480.00**		**$ 5,300.00**		**$ 8,750.00**		**$ 9,210.00**		**$ 11,580.00**		**$ 14,000.00**
SUBTOTAL SECTION 4						**$ 3,428.92**		**$ 3,724.20**		**$ 5,940.00**		**$ 7,206.78**		**$ 3,170.00**		**$ 4,156.00**		**$ 4,207.00**		**$ 5,303.23**		**$ 11,338.24**		**$ 3,676.80**		**$ 4,973.00**
SUBTOTAL SECTION 5						**$ 9,400.00**		**$ 920.00**		**$ 4,000.00**		**$ 8,500.00**		**$ 5,000.00**		**$ 4,000.00**		**$ 1,890.00**		**$ 2,225.00**		**$ 6,000.00**		**$ 2,700.00**		**$ 1,750.00**
TOTAL BID PRICE						**$ 171,681.00**		**$ 172,176.80**		**$ 176,413.00**		**$ 158,443.61**		**$ 184,030.00**		**$ 190,206.00**		**$ 219,894.00**		**$ 227,053.73**		**$ 248,081.12**		**$ 258,312.20**		**$ 315,968.25**
												$182,210.33*														

***Contractor disqualified due to errors in bid. Bid Sections 1-5 came to a total of $158,443.61 and a markup of 15% was added. Total Bid Price was submitted at $182,210.33.**

EXHIBIT B

BAYBROOK SECTION 1
DELABROOK CT

CobbFendley
Texas Registration No. 274
1920 Country Place Parkway, Suite 310
Pearland, Texas 77584
281.993.4952 | fax 281.993.8086
www.cobbfendley.com

SEABROOK

DATE: MARCH 2016

CERTIFICATE OF INTERESTED PARTIES

FORM 1295

Complete Nos. 1 - 4 and 6 if there are interested parties.
Complete Nos. 1, 2, 3, 5, and 6 if there are no interested parties.

OFFICE USE ONLY
CERTIFICATION OF FILING

Certificate Number:
2016-69197

Date Filed:
06/13/2016

Date Acknowledged:

1 Name of business entity filing form, and the city, state and country of the business entity's place of business.

Precise Services, Inc.
Porter, TX United States

2 Name of governmental entity or state agency that is a party to the contract for which the form is being filed.

City of Seabrook

3 Provide the identification number used by the governmental entity or state agency to track or identify the contract, and provide a description of the services, goods, or other property to be provided under the contract.

2016-06
Delabrook Court Paving Improvement Project

4 Name of Interested Party	City, State, Country (place of business)	Nature of interest (check applicable)	
		Controlling	Intermediary

5 Check only if there is NO Interested Party. [X]

6 AFFIDAVIT

I swear, or affirm, under penalty of perjury, that the above disclosure is true and correct.

KARINA LOPEZ
Notary Public, State of Texas
My Commission Expires
December 16, 2018

Signature of authorized agent of contracting business entity

AFFIX NOTARY STAMP / SEAL ABOVE

Sworn to and subscribed before me, by the said Alberto Lopez, this the 13th day of June, 20 16, to certify which, witness my hand and seal of office.

Signature of officer administering oath	Printed name of officer administering oath	Title of officer administering oath
	Karina Lopez	Notary Public

CITY OF SEABROOK
ORDINANCE NO. 2016-15

UPDATE RULES OF PROCEDURE
FOR CITY COUNCIL AGENDAS AND MEETINGS

AN ORDINANCE AMENDING CHAPTER 2 OF THE CODE OF ORDINANCES OF THE CITY OF SEABROOK, ENTITLED "ADMINISTRATION," ARTICLE II, "CITY COUNCIL," DIVISION 2, "RULES OF PROCEDURE," SECTION 2-47(6), "AGENDA; ESTABLISHING", SECTION 2-48(3) AND SECTION 2-48(6)(d), "ORDER OF BUSINESS", SECTION 2-54, "CONFORMANCE WITH THE CITY CHARTER", AND ARTICLE IV, "ORDINANCES", SECTION 2-96, "INTRODUCTION OF ORDINANCES" AND SECTION 2-99, "VOTE ON FINAL PASSAGE" BY UPDATING THE REFERENCES TO SPECIFIC SECTIONS TO CORRESPOND WITH RECENT AMENDMENTS OF THE CITY'S CHARTER; REPEALING ALL ORDINANCES OR PARTS OF ORDINANCES INCONSISTENT OR IN CONFLICT HEREWITH; AND PROVIDING FOR SEVERABILITY; AND PROVIDING FOR AN EFFECTIVE DATE.

WHEREAS, the Seabrook City Council, employees, citizens and the general public are currently governed by rules of procedure for the preparation of city council agendas and the conduct of city council meetings as contained in the Code of the City of Seabrook, Chapter 2, Article II, Division 2, entitled "Rules of Procedure"; and

WHEREAS, the Seabrook City Council, employees, citizens and the general public are currently governed by rules of procedure for introduction of ordinances for consideration by City Council as contained in the Code of the City of Seabrook, Chapter 2, Article IV, entitled "Ordinances"; and

WHEREAS, the Seabrook Charter was amended by a majority of the voters at the May 9, 2015 Special City Election which resulted in the renumbering of some sections in Articles II and IV of the Seabrook Charter; and

WHEREAS, the references in the Code of Ordinances to specific sections of the City Charter should be updated so that any person reviewing the Code of Ordinances will be able to easily reference the correct section of the City Charter for proper reference; now, therefore,

BE IT ORDAINED BY THE COUNCIL OF THE CITY OF SEABROOK, STATE OF TEXAS:

SECTION 1. AMENDMENT TO THE CODE

That Chapter 2 entitled, "Administration," Article II, "City Council", Division 2, "Rules of Procedure", Section 2-47(6), "Agenda; Establishing", Section 2-48(3) and Section 2-48(6)(d), "Order of Business", and Section 2-54, "Conformance with the City Charter" and Article IV, "Ordinances", Section 2-96, "Introduction of Ordinances" and Section 2-99, "Vote on Final Passage" of the Code of the City of Seabrook be amended as follows:

Sec. 2-47. - Agenda; establishing.

Placing items on the agenda. Placing items on the agenda shall be accomplished as follows:

(6) Emergency items may be added if it is posted for at least two hours before the meeting is convened. Emergency items are defined as those items which constitute an emergency or an urgent public necessity for which immediate action is required because of an imminent threat to public health or safety or a reasonably unforeseen situation, as provided by law. Conditions for adding emergency ordinances are specifically defined in the Charter, section [~~2.14~~] 2.12, and V.T.C.A., Government Code §§ 551.045 and 551.047.

(Ord. No. 2010-16, § 1, 7-20-2010)

Sec. 2-48. - Order of business.

The agenda for meetings of the city council shall be divided into the following categories of business. Absent direction from city council, the city secretary shall prepare the agenda in the order listed below. The council may by majority vote establish alternative order of business categories for future council meetings. The city secretary shall then prepare an amending ordinance reflecting the amended agenda order. The mayor with a majority consensus of council may suspend the rules and change the order of business at any meeting of the city council for the accommodation of citizens, visitors and guests. In addition, the city council, by majority vote shall have the right to change the order of the agenda at any meeting. The mayor shall have the right to change the order of individual agenda items within each category of business during the draft agenda review process detailed in subsection 2-47(4) above.

(3) *Public comments and announcements.* This time shall be used to hear public comment and any announcements of interest to the public or to the council. Comments shall be limited to city business or city-related business or matters of general public interest and shall not include any personal attacks. Persons or organizations who want to make comments or presentations to the council are required to register with the city secretary, up to the time the council meeting convenes, stating name, address and subject of presentation or comment. A registration form will remain in the lobby of city hall for this purpose. Each speaker shall clearly state his or her name and address to facilitate accurate recording, of which shall become part of the written minutes. The category of "Public Comments and Announcements" shall be included on every

regular and special council agenda, in accordance with the City Charter, section [~~2.12~~] 2.10 which provides that the public shall be given the opportunity to speak at every council meeting in accordance with procedures established by city council.

The item titled "Mayor, City Council and/or members of city staff may make announcements about city/community events" shall be a standing item under Public Comments and Announcements.

(6) *Consent agenda.* The consent agenda may consist of items about which no controversy or need for discussion is anticipated. All consent agenda items are considered to be routine by the city council and will be enacted by one motion. There will be no separate discussion of these items unless a councilmember, city manager, city attorney or city secretary so requests, in which event the item will be removed from the consent agenda and considered immediately following the Consent Agenda. Complete written explanations and documentation must be submitted to the city secretary before any item will be placed on the consent agenda by the time established for placing items on the regular agenda as stated in subsection 2-47(1). Items which may be placed in the consent agenda are as follows:

a. Approve minutes of regular and special council meetings.

b. Receive written reports from individual councilmembers, city manager, city engineer, auditor or other professionals hired by the city and/or city directors. City boards/commissions may also submit minutes and written reports.

c. Establish specific dates for future meetings and public hearings. Alternatively, this item may be placed under "Routine Business."

d. Consider and approve second readings of proposed ordinances. Ordinance readings can be no closer than two weeks apart in accordance with the City Charter, article II, subsection [~~2.13(a)~~] 2.11(b) the reading aloud of the title and caption of the ordinance at each reading shall suffice as the reading of the entire ordinance, subject to the requirements of the Charter, subsection 2.11(d).

(Ord. No. 2010-16, § 1, 7-20-2010; Ord. No. 2011-21, § 1, 11-15-2011)

Sec. 2.54. - Conformance with the city Charter.

Rules of procedure concerning agendas and meetings are also included in the Seabrook Charter, particularly in article II, sections 2.10 -2.13 [~~, 2.11, 2.12, and 2.13~~]. Conformance with these rules and procedures must be maintained. If the rules in this division conflict with the Charter, the Charter shall prevail.

(Ord. No. 2010-16, § 1, 7-20-2010)

Sec. 2-96. - Introduction of ordinances.

Any member of the city council, the city manager, city secretary or member of a city board or commission may offer ordinances for consideration by the city council, but must in all cases follow the rules as set forth in the city Charter, sections 2.10 – 2.13[~~2.15~~], and Code section 2-47[~~(a)~~].

(Code 1976, § 2-62(a); Code 1996, § 2-96)

Sec. 2-99. - Vote on final passage.

A vote on the passage of any proposed ordinance or amendment can be taken immediately after the second [~~third~~] reading and at the same meeting unless otherwise provided by Charter or herein.

(Code 1976, § 2-6; Code 1996, § 2-99)

SECTION 2. REPEAL OF CONFLICTING ORDINANCES.

All ordinances or parts of ordinances inconsistent or in conflict herewith are, to the extent of such inconsistency or conflict, hereby repealed.

SECTION 3. SEVERABILITY.

In the event any clause, phrase, provision, sentence, or any part of this Ordinance or the application of the same to any person or circumstances shall for any reason be adjudged invalid or held unconstitutional by a court of competent jurisdiction, it shall not affect, impair, or invalidate this Ordinance as a whole or any part or provision hereof other than the part declared to be invalid or unconstitutional; and the City Council of the City of Seabrook, Texas, declares that it would have passed each and every part of the same notwithstanding the omission of any such part thus declared to be invalid or unconstitutional, whether there be one or more parts.

PASSED AND APPROVED on first reading this 7th day of June, 2016.

PASSED, APPROVED, AND ADOPTED on second and final reading this 21st day of June, 2016.

By: _____
Glenn Royal, Mayor

ATTEST:
By: _____
Robin Hicks, TRMC
City Secretary

Approved as to form:

_____
Steven L. Weathered, City Attorney

CITY OF SEABROOK
ORDINANCE NO. 2016-14

AN ORDINANCE AMENDING CHAPTER 90 OF THE CODE OF ORDINANCES OF THE CITY OF SEABROOK, ENTITLED "TRAFFIC AND VEHICLES," ARTICLE III, "STOPPING, STANDING, AND PARKING," DIVISION 1, "GENERALLY," TO UPDATE AND FURTHER CLARIFY SECTION 90-61 CURRENTLY ENTITLED, "PARKING PROHIBITED SIGNS;" BY ADDING NEW PROVISIONS AND REVISING TITLE TO "NO PARKING – DESIGNATION GENERALLY;" BY ADDING A NEW SECTION 90-80, "SCHEDULE I – NO PARKING ZONES"; PROVIDING FOR A PENALTY IN AN AMOUNT OF NOT MORE THAN TWO HUNDRED DOLLARS ($200.00) FOR VIOLATION OF ANY PROVISIONS HEREOF BY INCLUSION INTO THE CODE; REPEALING ALL ORDINANCES OR PARTS OF ORDINANCES INCONSISTENT OR IN CONFLICT HEREWITH; PROVIDING FOR SEVERABILITY; AND PROVIDING FOR NOTICE.

WHEREAS, the City Council of the City of Seabrook has attempted to be continually aware of the problems and issues relating to hazards, nuisances and other circumstances which negatively impact the health, safety and well-being of its residents, citizens and inhabitants; and

WHEREAS, City Council has determined it necessary to prohibit the obstruction, blockage and related parking issues in the interest of public safety by updating and revising Section 90-61 to address no parking designation generally, and by adding a new Section 90-80 to specifically designate no parking zones;

NOW THEREFORE, BE IT ORDAINED BY THE CITY COUNCIL OF THE CITY OF SEABROOK, TEXAS, AS FOLLOWS:

SECTION 1. FINDINGS OF FACT.

The facts and matters set forth in the preamble of this Ordinance are hereby found to be true and correct.

SECTION 2. AMENDMENT TO THE CODE.

That Chapter 90 entitled, "Traffic and Vehicles," Article III, "Stopping, Standing, and Parking," Division 1, "Generally" be amended by revising section 90-61 to amend title to, "No Parking- Designation Generally" as follows:

"Sec. 90-61. [~~Parking Prohibited Signs~~] No Parking – Designation Generally

[~~There shall be installed at such points on streets and rights-of-way in the city, as may be directed by the city council, appropriate signs notifying drivers of vehicles that parking is prohibited. Such signs may include additional notice of tow-away zone, but such additional notice shall not be required. Whenever any such sign has been erected, it shall be unlawful for the driver or operator of any vehicle to park contrary to such sign. Each day or part of a day that prohibited parking continues shall constitute a separate offense.~~]

(Code 1976, § 16-18.1; Code 1996, § 70-61)

(a) Traffic-control signs, signals, devices and markings heretofore placed or erected by the police department or department of community development and now in use for the purpose of regulating, warning or guiding traffic are hereby affirmed, ratified and declared to be official traffic-control devices, provided that these traffic-control devices are not inconsistent with the provisions of state law or this chapter.

(b) The Uniform Act Regulating Traffic on Highways regulating the stopping, standing or parking of vehicles shall be applicable upon all streets and highways within the city, and it shall be unlawful for any person to allow, suffer or permit any vehicle registered in his/her name to stand or be parked in or upon any street or highway in the city in violation of any of the provisions of this chapter regulating stopping, standing or parking of vehicles.

(c) The city council may authorize portions of streets, sidewalks, curbs, alleys and parking lots, public and private, to be painted or marked, including sign placement as an indication of specific areas where parking is prohibited for the purpose of traffic control in the interest of safety. All such areas shall be painted or marked in accordance with the standards established in the Texas Manual on Uniform Traffic Control Devises as amended.

(d) It shall be unlawful for any person to permit a vehicle to stand or be parked at a location or during the times where signs or markings prohibit such standing or parking.

(e) Unauthorized use of parking spaces designated for the exclusive use of vehicles transporting persons with disabilities shall be unlawful and shall be punished as provided by Chapter 681 of the Texas Transportation Code.

(f) It shall be unlawful for any person to allow towed vehicles, including trailers, mobile homes, boat trailers, boats, boat rigging, carts, motor homes, recreational vehicles or camper to stand, be parked, or stored in any street or right of way or on lawns between the actual front line of any structure and the street (or in the case of a corner lot, between the construction line of any structure of street) or as otherwise prohibited by Section 90-70. Nothing herein shall prohibit parking on an existing privately owned paved or unpaved driveway.

(g) The police department may remove from the streets, alleys, sidewalks and public ways of the city all motor vehicles which are illegally parked in violation of any ordinance of the city or of the laws of the state.

(h) It is an affirmative defense to an offense under this section if such stopping, standing or parking has prior approval of the city manager or chief of police and approval of the city council.

(i) It is an affirmative defense under this section that the parking or standing was necessary to avoid conflict with other traffic, or at the directions of a police officer or otherwise in compliance with law.

"Sec. 90-80. Schedule I: No Parking Zones

There shall be installed at such points on streets and rights-of-way in the city, as may be directed by the city council, appropriate signs or markings designating "No Parking Any Time" or related prohibitions, which shall be installed at the locations as listed. Such signs may include additional notice of tow-away zone, but such additional notice shall not be required. Whenever any such sign has been erected, it shall be unlawful for the driver or operator of any vehicle to park contrary to such sign. Each day or part of a day that prohibited parking continues shall constitute a separate offense.

The parking prohibition provided in this section shall not be in effect until appropriate signs or markings have been provided at the location giving notice to motorists. The city manager, chief of police or their authorized representative is directed to cause such signs to be erected or appropriate markings to be made on the curbs at such locations in accordance with the Texas Manual for Traffic Signs and Signals.

STREET	EXACT LOCATION	TIME
10th Street	At any point on 10th Street, including no parallel parking within McHale Park Parking Area	No parking at any time
Waterfront Dr.	0 Blk- 699 Blk at the intersection with Todville Road southeast to the end of 11th Street at the Point	No parking at any time
Bahama Drive	1500 Blk to 1900 Blk on the east side between Aspen Lane and El Mar Lane	No parking at any time
Bath Avenue	100 Blk to 300 Blkl between 10th Street and 12th Street	No parking at any time
Cook Street	1200 Blk to 1400 Blk on either side of Cook St	
Ellis Avenue	100 Blk (Unimproved Surface) From Waterfront Dr southwest to the end of Ellis Avenue	No parking at any time
Hardesty	1000 Blk on the west side between 3rd Street and 4th Street	No parking at any time

Lakeside Drive	In its entirety, EXCEPT vehicles shall be allowed to park on the east side between NASA Parkway and Sawyer Drive	No parking between 6:00 a.m. and 6:00 p.m.
Larrabee	In its entirety from NASA Parkway north to its end	No parking at any time
Main Street	1500 Blk to 1800 Blk, between SH 146 and N. Meyer	No parking at any time
N. Meyer	500 Blk to 2000 Blk between State Highway 146 and E. Meyer	No parking at any time
Old SH 146	At any point	No parking at any time
State Highway 146	From the northern city limit extending south to the southern city limit	No parking at any time
Todville Road	1100 Blk – 1200 Blk on either side of Todville Road	No parking at any time
W. Respdorph Road	At any point	No parking at any time

SECTION 3. PENALTY CLAUSE; INCLUSION INTO THE CODE.

This Ordinance is hereby incorporated into and made a part of the Seabrook City Code. Any person who shall violate any provision of this Ordinance shall be deemed guilty of a misdemeanor and, upon conviction, shall be fined in an amount not more than Two Hundred Dollars ($200.00) per offense. Each day of violation shall constitute a separate offense.

SECTION 4. REPEAL OF CONFLICTING ORDINANCES.

All ordinances or parts of ordinances inconsistent or in conflict herewith are, to the extent of such inconsistency or conflict, hereby repealed.

SECTION 5. SEVERABILITY.

In the event any clause, phrase, provision, sentence, or any part of this Ordinance or the application of the same to any person or circumstances shall for any reason be adjudged invalid or held unconstitutional by a court of competent jurisdiction, it shall not affect, impair, or invalidate this Ordinance as a whole or any part or provision hereof other than the part declared to be invalid or unconstitutional; and the City Council of the City of Seabrook, Texas, declares that it would have passed each and every part of the same notwithstanding the omission of any such part thus declared to be invalid or unconstitutional, whether there be one or more parts.

SECTION 6. NOTICE BY PUBLICATION

The City Secretary shall give notice of the enactment of this Ordinance by promptly publishing it or its descriptive caption and penalty after final passage in the official newspaper of the City; the Ordinance to take effect upon publication.

PASSED AND APPROVED on first reading this 7th day of June, 2016.

PASSED AND APPROVED on second and final reading this 21st day of June, 2016.

By: _____
Glenn Royal
Mayor

ATTEST:

By: _____
Robin Hicks, TRMC
City Secretary

Approved as to form:

_____
Steven L. Weathered
City Attorney

STAFFING SERVICES AGREEMENT
SEABROOK ECONOMIC DEVELOPMENT CORPORATION
AND CITY OF SEABROOK, TEXAS
FY 2016-2017

THE STATE OF TEXAS §
§
COUNTY OF HARRIS §

This Staffing Services Agreement ("Agreement") is made and entered into by and between the City of Seabrook, Texas (the "City") and the Seabrook Economic Development Corporation ("EDC").

WHEREAS, pursuant to The Texas Development Corporation Act, Texas Local Government Code Chapters 501, 502 and 505 (the "Act"), the City created the EDC and collects, on behalf of the EDC, an additional sales and use tax of which a portion may be used by the EDC to pay certain administrative costs; and

WHEREAS, the EDC desires to utilize the services and support of City staff in furtherance of its work and the projects it undertakes to eliminate duplication and to promote economy and efficiency in the use of the additional sales tax revenues it receives; and

WHEREAS, the City has determined that providing personnel and services to the EDC will be mutually beneficial to the City and the EDC, will promote local economic development, and stimulate business and commercial activity within the City, all in furtherance of the purposes of the EDC; now, therefore,

FOR AND IN CONSIDERATION of the mutual covenants, agreements, and benefits accruing herein to each party, the City and the EDC hereby agree as follows:

1. The EDC will utilize City employees to perform the following services for and on behalf of the EDC:

a Accounting and financial services;

b. Professional contract administration services;

c. Administrative/secretarial support;

d. Construction contract administration services;

e. Marketing services;

f. Director – Economic Development

g. Any other reasonable services in furtherance of the purposes of the EDC and authorized by the Act.

2. The City and EDC acknowledge that from time to time conflicts between a city employee's primary responsibilities to the City and requests for services from the EDC may arise. The City and the EDC encourage employees to bring conflicts to the attention of the City Manager, who shall consult with the EDC President as necessary to prioritize demands and resolve any conflicts.

3. Consideration

After having reasonably estimated the amount of time City employees are anticipated to spend performing services for and on behalf of the EDC during the term of this Agreement, the parties have agreed that EDC will reimburse the City the amount of TWO HUNDRED THOUSAND DOLLARS AND NO/100 ($200,000.00), as presented in the Fiscal Year 2016-2017 EDC and City budgets. (Reference Exhibit A). Such reimbursement is predicated on the approval of the budget by both the EDC Board and City Council and is contingent upon such amount being collected in sales and use tax dollars for the fiscal year.

4. Term

The term of this Agreement shall be for one (1) year commencing October 1, 2016, no matter when actually executed. Provided, further, either party may terminate this Agreement by giving thirty (30) days advance written notice thereof to the other.

5. Right to Hire Third Parties

EDC specifically reserves the right to hire third parties to perform any or all of the services described herein.

6. Notice

All notices and communications regarding the term of this Agreement to any party shall be in writing. If mailed, any notice or communication shall be deemed to have been received three (3) days after the date of its deposit into the United States mail, first class, postage prepaid. Unless otherwise provided in this Agreement, all notices shall be delivered to the following address:

City of Seabrook Attention: City Manager 1700 First Street Seabrook, Texas 77586	Seabrook Economic Development Corporation Attention: President, Board of Directors 1700 First Street Seabrook, Texas 77586

Either party may designate a different address by giving the other parties at least ten (10) days written notice in the manner prescribed above.

7. Parties in Interest

This Agreement shall be for the sole and exclusive benefit of the City and the EDC and shall not be construed to confer any benefit or right upon any other parties.

8. Severability

In the event any clause, phrase, provision, sentence, or part of this Agreement shall for any reason be adjudged invalid or held unconstitutional by a court of competent jurisdiction, it shall not affect, impair, or invalidate this Agreement as a whole or any part or provision hereof other than the part declared to be invalid or unconstitutional.

9. Entire Agreement

This Agreement contains the entire agreement between the parties and supersedes all other negotiations and agreements with respect to the matters addressed herein, whether written or oral.

IN WITNESS WHEREOF, this Agreement has been executed by the duly authorized officers of the City of Seabrook, Texas and the Seabrook Economic Development Corporation, as of _____ day of _____, 2016.

CITY OF SEABROOK

ATTEST:

_____
Glenn Royal
Mayor

_____
Robin Hicks, TRMC
City Secretary

SEABROOK ECONOMIC DEVELOPMENT CORPORATION

ATTEST:

Ernie Davis

Ernie Davis, Secretary
Board of Directors

Paul Dunphey, President
Board of Directors

CLEMC REPORT

Seabrook Stats Report MAY16

Allergic Reaction	0
Assist by EMS	0
Attempted Suicide	3
Breathing problems	6
Choking	1
CPR	0
CVA	0
Death Investigation	0
Diabetic	1
Drowning	0
Heart problems/pain	5
Injured person	17
Motor Vehicle Incidents	11
Medical Alert Alarm	0
OB Baby Call	0
Overdose	3
Seizure	2
Sick Call	3
Trauma Gunshot/Stabbing	17
fire stand-by	0
Unconscious	0
Total	69

Response Time 7 Min 41 Sec

Seabrook

City of Seabrook Monthly Statistics

Alarm Date Between {05/01/2016} And {05/31/2016} and District = "1 "

Incident Type	Count	Pct of Incidents	Total Est Loss	Pct of Losses
	1	2.00%	$0	0.00%
	1	**2.00%**	**$0**	**0.00%**
1 Fire				
100 Fire, Other	1	2.00%	$0	0.00%
	1	**2.00%**	**$0**	**0.00%**
3 Rescue & Emergency Medical Service Incident				
311 Medical assist, assist EMS crew	23	46.00%	$0	0.00%
322 Motor vehicle accident with injuries	1	2.00%	$0	0.00%
324 Motor Vehicle Accident with no injuries	4	8.00%	$0	0.00%
331 Lock-in (if lock out , use 511)	1	2.00%	$0	0.00%
	29	**58.00%**	**$0**	**0.00%**
4 Hazardous Condition (No Fire)				
400 Hazardous condition, Other	1	2.00%	$0	0.00%
411 Gasoline or other flammable liquid spill	1	2.00%	$0	0.00%
424 Carbon monoxide incident	1	2.00%	$0	0.00%
445 Arcing, shorted electrical equipment	3	6.00%	$0	0.00%
	6	**12.00%**	**$0**	**0.00%**
5 Service Call				
510 Person in distress, Other	2	4.00%	$0	0.00%
	2	**4.00%**	**$0**	**0.00%**
6 Good Intent Call				
611 Dispatched & cancelled en route	2	4.00%	$0	0.00%
6111 Dispatched & cancelled en route to automatic alarm	1	2.00%	$0	0.00%
6112 Dispatched & cancelled en route EMS	1	2.00%	$0	0.00%
	4	**8.00%**	**$0**	**0.00%**
7 False Alarm & False Call				
700 False alarm or false call, Other	1	2.00%	$0	0.00%
745 Alarm system activation, no fire - unintentional	6	12.00%	$0	0.00%

Seabrook

City of Seabrook Monthly Statistics

Alarm Date Between {05/01/2016} And {05/31/2016} and District = "1 "

Incident Type	Count	Pct of Incidents	Total Est Loss	Pct of Losses
7 False Alarm & False Call				
	7	14.00%	$0	0.00%

Total Incident Count: 50 **Total Est Loss:** $0

Seabrook

City of Seabrook Monthly Statistics

Alarm Date Between {05/01/2016} And {05/31/2016} and District = "1"

Total Number of Incidents	50	**Total Number of Responding Personnel**	387
Average Turnout per Incident	8		

Seabrook

City of Seabrook Monthly Statistics

Alarm Date Between {05/01/2016} And {05/31/2016} and District = "1 "

1 Seabrook

Incident	Alarm Date & Time	Arrival Date & Time	Stn	Shift	Response Time
16-0160290	05/25/2016 09:54:02	05/25/2016 10:10:47	1		00:16:45
		Average Response Time for District/Incident Type			**00:16:45**
100 Fire, Other					
16-0160297	05/28/2016 17:45:41	05/28/2016 17:53:12	1	2	00:07:31
		Average Response Time for District/Incident Type			**00:07:31**
311 Medical assist, assist EMS crew					
16-0160241	05/01/2016 02:51:09	05/01/2016 02:57:29	1	3	00:06:20
16-0160247	05/02/2016 19:42:50	05/02/2016 19:49:36	1	2	00:06:46
16-0160248	05/03/2016 03:29:13	05/03/2016 03:34:32	1	3	00:05:19
16-0160249	05/04/2016 07:36:34	05/04/2016 07:41:41	1	1	00:05:07
16-0160250	05/04/2016 11:03:27	05/04/2016 11:05:01	1	1	00:01:34
16-0160251	05/04/2016 18:43:52	05/04/2016 18:46:38	1	2	00:02:46
16-0160253	05/05/2016 21:27:03	05/05/2016 21:33:02	1	2	00:05:59
16-0160254	05/06/2016 00:37:48	05/06/2016 00:46:51	1	3	00:09:03
16-0160257	05/08/2016 15:31:35	05/08/2016 15:34:54	1	2	00:03:19
16-0160258	05/08/2016 16:33:56	05/08/2016 16:37:59	1	2	00:04:03
16-0160266	05/12/2016 02:19:18	05/12/2016 02:23:59	1	3	00:04:41
16-0160273	05/15/2016 15:41:59	05/15/2016 15:42:11	1	2	00:00:12
16-0160275	05/17/2016 20:24:22	05/17/2016 20:30:26	1	2	00:06:04
16-0160276	05/18/2016 09:55:14	05/18/2016 10:03:05	1	1	00:07:51
16-0160279	05/19/2016 12:21:16	05/19/2016 12:22:37	1	1	00:01:21
16-0160280	05/20/2016 07:48:12	05/20/2016 07:52:50	1	1	00:04:38
16-0160284	05/22/2016 15:09:14	05/22/2016 15:12:13	1	2	00:02:59
16-0160287	05/23/2016 09:15:01	05/23/2016 09:19:17	1	1	00:04:16
16-0160288	05/23/2016 14:59:14	05/23/2016 15:02:04	1	1	00:02:50
16-0160289	05/23/2016 19:28:28	05/23/2016 19:32:43	1	2	00:04:15
16-0160291	05/26/2016 09:04:27	05/26/2016 09:10:35	1	1	00:06:08
16-0160296	05/28/2016 14:00:30	05/28/2016 14:02:58	1	1	00:02:28
16-0160300	05/30/2016 13:27:06	05/30/2016 13:31:38	1	1	00:04:32
		Average Response Time for District/Incident Type			**00:04:27**
322 Motor vehicle accident with injuries					
16-0160268	05/13/2016 18:20:35	05/13/2016 18:22:32	1	2	00:01:57
		Average Response Time for District/Incident Type			**00:01:57**
324 Motor Vehicle Accident with no injuries					
16-0160246	05/02/2016 18:14:08	05/02/2016 18:17:40	1	2	00:03:32
16-0160260	05/09/2016 07:44:03	05/09/2016 07:45:55	1	1	00:01:52
16-0160263	05/09/2016 18:05:33	05/09/2016 18:09:30	1	2	00:03:57
16-0160293	05/27/2016 20:25:43	05/27/2016 20:31:23	1	2	00:05:40
		Average Response Time for District/Incident Type			**00:03:45**

Seabrook

City of Seabrook Monthly Statistics

Alarm Date Between {05/01/2016} And {05/31/2016} and District = "1 "

1 Seabrook

Incident	Alarm Date & Time	Arrival Date & Time	Stn	Shift	Response Time
331 Lock-in (if lock out , use 511)					
16-0160278	05/18/2016 20:50:28	05/18/2016 20:54:36	1	2	00:04:08
		Average Response Time for District/Incident Type			**00:04:08**
400 Hazardous condition, Other					
16-0160270	05/14/2016 12:17:36	05/14/2016 12:23:02	1	1	00:05:26
		Average Response Time for District/Incident Type			**00:05:26**
411 Gasoline or other flammable liquid spill					
16-0160256	05/08/2016 15:28:42	05/08/2016 15:35:24	1	2	00:06:42
		Average Response Time for District/Incident Type			**00:06:42**
424 Carbon monoxide incident					
16-0160267	05/12/2016 18:20:30	05/12/2016 18:30:24	1	2	00:09:54
		Average Response Time for District/Incident Type			**00:09:54**
445 Arcing, shorted electrical equipment					
16-0160271	05/14/2016 21:47:04	05/14/2016 22:06:56	1	2	00:19:52
16-0160272	05/15/2016 14:02:12	05/15/2016 14:04:48	1	1	00:02:36
16-0160295	05/27/2016 23:15:48	05/27/2016 23:23:33	1	3	00:07:45
		Average Response Time for District/Incident Type			**00:10:04**
510 Person in distress, Other					
16-0160277	05/18/2016 12:01:14	05/18/2016 12:04:34	1	1	00:03:20
16-0160282	05/21/2016 08:05:21	05/21/2016 08:12:18	1	1	00:06:57
		Average Response Time for District/Incident Type			**00:05:09**
6111 Dispatched & cancelled en route to automatic alarm					
16-0160298	05/29/2016 11:11:50	05/29/2016 11:16:42	1	1	00:04:52
		Average Response Time for District/Incident Type			**00:04:52**
700 False alarm or false call, Other					
16-0160245	05/02/2016 15:40:35	05/02/2016 15:45:29	1	2	00:04:54
		Average Response Time for District/Incident Type			**00:04:54**
745 Alarm system activation, no fire - unintentional					
16-0160242	05/01/2016 05:29:18	05/01/2016 05:33:00	1	3	00:03:42
16-0160255	05/07/2016 10:24:58	05/07/2016 10:28:25	1	1	00:03:27
16-0160259	05/09/2016 06:06:09	05/09/2016 06:10:20	1	3	00:04:11
16-0160269	05/13/2016 22:52:33	05/13/2016 22:59:06	1	2	00:06:33
16-0160283	05/21/2016 14:02:20	05/21/2016 14:08:05	1	1	00:05:45
16-0160285	05/22/2016 15:27:58	05/22/2016 15:28:24	1	2	00:00:26
		Average Response Time for District/Incident Type			**00:04:01**

Overall Average Response Time for District 00:05:12

Total Incident Count: 47

Overall Average Response Time: 00:05:12

Council Stat Report
5/1/2016 - 5/31/2016

Offense Data

BURGLARY OF MOTOR VEHICLE	7
POSSESSION OF SUBSTANCE IN PENALTY GROUP 1	5
ASSAULT BY CONTACT F/VIO	4
CRIMINAL MISCHIEF	3
INFORMATION REPORT	3
UNAUTHORIZED USE OF A VEHICLE (AUTO)	3
(FSGI) ACCIDENT INVOLVING DAMAGE TO VEHICLE- CLASS B	2
CREDIT CARD OR DEBIT CARD ABUSE	2
DRIVING WHILE LICENSE INVALID (B)	2
FAIL TO GIVE INFORMATION - UNATTENDED VEHICLE	2
HARASSMENT	2
POSSESSION OF MARIJUANA	2
THEFT	2
(FSGI) ACCIDENT INVOLVING DAMAGE TO VEHICLE- CLASS C	1
ASSAULT BY CONTACT	1
ASSAULT BY THREAT	1
ASSAULT CAUSES BODILY INJURY FAMILY VIOLENCE ENHANCED	1
ASSAULT WITH A FIREARM-AGGRAVATED	1
BURGLARY OF BUILDING / NON-FORCED	1
CRIMINAL TRESPASS	1
CRUELTY TO NONLIVESTOCK ANIMALS	1
DEATH INVESTIGATION	1
DISCHARGE FIREARM	1
DRIVING WHILE INTOXICATED	1
FICTICIOUS REGISTRATION	1
FORGERY	1
INDECENCY WITH A CHILD - WITH CONTACT	1
INTERFERE WITH DUTIES OF PUBLIC SERVANT	1
KIDNAPPING	1
MISSING PERSON	1
POSSESSION DANGEROUS DRUG	1
POSSESSION OF SUBSTANCE IN PENALTY GROUP 2	1
POSSESSION OF SUBSTANCE IN PENALTY GROUP 3	1
PROHIBITED WEAPONS-POSSESS,MANUFACTURE,TRANS,REPAIR, SELL	1
PUBLIC INTOXICATION	1
SUICIDE - ATTEMPTED	1
TERRORISTIC THREAT	1
THEFT BICYCLE	1
Total Offense Reports:	**64**

Arrest Data

WARRANT - OTHER AGENCY	32
FAIL TO MAINTAIN FINANCIAL RESPONSIBILITY - C	15
WARRANT - AGENCY	15
NO DL	11
PUBLIC INTOXICATION	11
DRIVING WHILE LICENSE INVALID (C)	10
POSSESSION OF DRUG PARAPHERNALIA	10
POSSESSION OF SUBSTANCE IN PENALTY GROUP 1	9
EXPIRED LICENSE PLATES	5
DRIVING WHILE LICENSE INVALID (B)	4
POSSESSION OF MARIJUANA	4
ASSAULT BY CONTACT	3
ASSAULT WITH A FIREARM-AGGRAVATED	2
DEFECTIVE HEADLAMPS	2
EXPIRED MOTOR VEHICLE INSPECTION	2
FAIL TO MAINTAIN SINGLE LANE	2
FAILURE TO APPEAR	2
INTERFERE WITH DUTIES OF PUBLIC SERVANT	2
POSSESSION DANGEROUS DRUG	2
POSSESSION OF SUBSTANCE IN PENALTY GROUP 2	2
TAMPERING WITH GOVERNMENTAL DOCUMENT	2
(FSGI) ACCIDENT INVOLVING DAMAGE TO VEHICLE- CLASS B	1
(FSGI) ACCIDENT INVOLVING DAMAGE TO VEHICLE- CLASS C	1
ASSAULT BY THREAT	1
BIKE RIDER COMMIT ANY APPLICABLE HAZARDOUS TRAFFIC VIOLATION	1
BURGLARY OF MOTOR VEHICLE	1
DEFECTIVE TAIL LAMPS	1
DISORDERLY CONDUCT #1 - ABUSIVE LANGUAGE	1
DISPLAY FICTICIOUS INSPECTION STICKER OR INSURANCE DOCUMENT	1
DRIVING WHILE INTOXICATED	1
DRIVING WHILE LICENSE INVALID WITH PRIOR DWLI SUSP	1
DROVE ON SIDEWALK	1
EXPIRED PAPER PLATES REGISTRATION	1
FAIL TO DRIVE IN SINGLE MARKED LANE	1
FAIL TO MAINTAIN FINANCIAL RESPONSIBILITY - B	1
FAIL TO SIGNAL LANE CHANGE	1
FAILURE TO IDENTIFY	1
MINOR CONSUMPTION ALCOHOL	1
NO MOTOR VEHICLE INSPECTION CERTIFICATE	1
NO MOTORCYCLE ENDORSEMENT	1
NO REGISTRATION INSIGNIA	1
OBSTRUCTED/UNCLEAN REAR LP	1
OPERATE MOTOR VEHICLE WITHOUT TWO LICENSE PLATES	1
POSSESSION OF SUBSTANCE IN PENALTY GROUP 3	1
PROHIBITED WEAPONS-POSSESS,MANUFACTURE,TRANS,REPAIR, SELL	1
PUBLIC INTOXICATION / MINOR	1
RESISTING ARREST SEARCH OR TRANSPORTATION	1
TRAFFIC OFFENSE	1
UNAUTHORIZED USE OF A VEHICLE (AUTO)	1
UNLAWFUL POSSESSION OF A FIREARM BY A FELON	1

Total Arrests: 98 **Total Charges:** 176

CALL FOR SERVICE DATA

TRAFFIC STOP	599
SUSPICIOUS CIRC PERSON VEHICLE	92
CVE INSPECTION	80
ALARM BURGLAR	44
MINOR ACCIDENT	38
DISTURBANCE	36
ASSIST BY LAW	28
RECKLESS DRIVER CONDUCT	27
WELFARE CONCERN	23
TRAFFIC HAZ PROB DIRECT RELAT	20
CIVIL PROBLEM STANDBY	19
LOUD MUSIC NOISE	19
TRESPASS	18
FOLLOW UP	17
THEFT	17
ASSIST CITIZEN	15
INTOXICATED DRIVER PERSON	14
VIOLATION CITY ORDINANCE	11
BURGLARY	10
ACCIDENT MAJOR	9
FLAGDOWN	9
HARASSMENT	8
911 HANG UP	7
PARKING VIOLATION	7
THREAT TERRORISTIC	7
ANIMAL CONTROL PROBLEM	6
DISABLED VEHICLE	6
WARRANT SERVICE	6
CRIMINAL MISCHIEF	5
FRAUD	4
ABUSE NEGLECT CHILD ELDERLY	3
ALARM PANIC	3
ASSAULT	3
NARCOTICS VIOLATION	3
PROPERTY LOST RECOVERED	3
VEHICLE IN THE DITCH	3
ID THEFT	2
LOST MISSING RECOVERED ABDUCTD	2
UNAUTHORIZED USE OF M/V	2
ABANDONED VEHICLE	1
OVERDOSE / POISONING	1
SEXUAL ASSAULT	1
WEAPONS OFFENSES	1
Z ANIMAL AT LARGE	1
Z ANIMAL IN TRAP OR CONTAINED	1
Z INJURED ANIMAL	1
Total CFS:	**1232**

CITY OF SEABROOK

AGENDA BRIEFING

Date of Meeting: June 16, 2015

Submitter/Requestor: Sean Landis

Presenter: Sean Landis

Description/Subject: Monthly Building Department Report for May 2015.

Purpose/Need: Policy Issue☐ Administrative Issue ☐

Background/Issue (What prompted this need?): **None**

Impacted Parties (Expected/Notified): **Council, Staff & citizens**

Miscellaneous Comments:
In the month of May, there were three (3) residential permits issued totaling $1,005,884.00
No new commercial permits were issued in May.

Recommended Action:

Attachments:
- Monthly Permitting report page for May
- 2014-2015 Year to Date report
- Code Enforcement and Building Inspection report for May
- Fire Marshal Inspection report for May

Fiscal Impact: Budgeted ___ Yes ___No
Budget Amendment Required ___ Yes ___No
Future/Ongoing Impact ___ Yes ___No

Finance Officer Review:
_____

Budget Dept/Line Item Number _____

Funding Comments:

Where on the agenda should this item be placed? Consent Agenda

Suggested Motion:

City Manager Review:

- ○ Approved as submitted
- ○ Submitted for Council consideration without comment
- ○ Submitted for Council consideration with comments stated below:

(All items are to be reviewed and approved by the city manager, except items submitted by the mayor or any council member or routine consent agenda items such as minutes and second & third readings of ordinances.)

Sent to City Attorney for review _____ _____
(City Attorney should review all ordinances, resolutions, contracts and executive session items.)

Received and accepted by the City Secretary/Assistant _____ _____

Returned by the City Secretary/Assistant (If incomplete) _____ _____

All requests must be submitted to the City Secretary's Office no later than 5:00 p.m. on the Wednesday preceding the regular Tuesday Council Meeting. All required attachments are to be submitted with the request. Incomplete items cannot be placed on the agenda.

Building Department Statistics
May 2015

PERMIT TYPES	# ISSUED	VALUATION	FEES PAID
New Residential	3	$1,005,884.00	$5,247.00
Building Additions	10	$132,206.00	$1,410.00
New Commercial	0	$0.00	$0.00
Commercial Additions	3	$53,000.00	$782.50
New City	0	$0.00	$0.00
City Additions	0	$0.00	$0.00
Electrical	10	$17,930.00	$413.00
Fill	3	$1,500.00	$600.00
Irrigation	1	$2,000.00	$77.50
Mechanical	28	$620,327.60	$9,603.00
Plumbing	12	$246,865.00	$425.00
Sign	1	$5,500.00	$150.00
Demolition	0	$0.00	$0.00
Fire/Sprinkler	1	$170,000.00	$1,972.00
Miscellaneous	4	$239,726.00	$255.00
TOTALS	**76**	**$2,494,938.60**	**$20,935.00**

Building Department Statistics
Fiscal Year 2014-2015

Date	New Residential		Residential Additions & Pools		Commercial New & Additions		City Projects New & Additions		*Miscellaneous		Electrical		Irrigation		Mechanical		Plumbing		Monthly Totals		Last Year Totals	
	#	Valuation	#	Valuation	#	Valuation	#	Valuation	#	Valuation	#	Valuation	#	Valuation	#	Valuation	#	Valuation	#		#	
October	2	$500,000.00	15	$115,171.81	2	$81,550.00	0	$0.00	4	$49,820.58	12	$ 78,198.00	1	$11,000.00	14	$ 164,948.05	17	$ 177,785.00	67	$1,178,473.44	52	$ 1,875,649.25
November	2	$737,666.07	12	$172,288.01	1	$5,000.00	0	$0.00	8	$82,630.00	12	$ 61,349.00	1	$1,037.00	4	$ 16,673.30	13	$ 97,374.00	53	$1,174,017.38	58	$ 601,737.83
December	2	$406,936.50	8	$269,588.00	4	$10,175,324.00	0	$0.00	6	$24,360.00	8	$ 551,460.00	2	$2,728.00	8	$ 86,891.30	14	$ 554,270.00	52	$12,071,557.80	56	$ 1,183,504.55
January	1	$846,716.00	8	$108,945.00	3	$288,203.53	0	$0.00	2	$9,900.00	11	$ 413,980.00	1	$3,100.00	9	$ 188,313.44	30	$2,952,798.25	65	$4,811,956.22	36	$ 145,896.60
February	1	$550,112.00	14	$330,932.38	4	$132,696.97	0	$0.00	7	$139,061.00	30	$1,871,650.00	1	$5,591.96	9	$ 91,129.30	18	$ 89,825.00	84	$3,210,998.61	45	$ 1,291,282.66
March	8	2,417.531.00	11	$194,015.00	2	$21,000.00	0	$0.00	4	$13,950.00	15	$1,155,797.00	1	$2,750.00	12	$ 121,567.96	12	$ 29,105.00	65	$1,538,184.96	58	$ 3,473,005.90
April	0	$0.00	21	$295,937.00	0	$0.00	0	$0.00	11	$788,619.06	25	$ 59,572.12	1	$26,950.00	9	$ 80,978.92	20	$ 72,661.40	87	$1,324,718.50	74	$ 2,034,032.28
May	3	$1,005,884.00	10	$132,206.00	3	$53,000.00	0	$0.00	9	$416,726.00	10	$ 17,930.00	1	$2,000.00	28	$ 620,327.60	12	$ 246,865.00	76	$2,494,938.60	79	$ 9,720,944.39
June							0	$0.00											0	$0.00	65	$ 10,851,196.51
July							0	$0.00											0	$0.00	79	$ 4,782,835.62
August							0	$0.00											0	$0.00	58	$ 996,279.95
September							0	$0.00											0	$0.00	64	$ 32,767,258.41
Y-T-D TOTALS	19	$4,047,314.57	99	$1,619,083.20	19	$10,756,774.50	0	$0.00	51	$1,525,066.64	123	$4,209,936.12	9	$55,156.96	93	$1,370,829.87	136	$4,220,683.65	549	$27,804,845.51	724	$ 69,723,623.95

	Fees Paid		Fees Paid
October	$9,994.00	April	$13,631.75
November	$8,942.00	May	$20,935.00
December	$7,178.25	June	
January	$31,285.00	July	
February	$43,269.50	August	
March	$18,356.00	September	
		Y-T-D Total	$ 153,591.50

*** Miscellaneous includes fill,tree, fire, sign, demolition, & misc, (certificate of occupancy, etc.)**

New Residential Buildings	
	19

	#	Water Impact Fees	#	Sewer Impact Fees			#	Water Impact Fees	#	Sewer Impact Fees	
October	2	$ 3,567.12	2	$ 8,078.10		April		$ -		$ -	
November	2	$ 3,456.58	2	$ 7,339.25		May		$ 3,934.56		$ 5,887.05	
December	3	$ 5,717.49	2	$ 5,093.05		June					
January	1	$ 948.00	1	$ 1,054.00		July					
February	1	$ 375.00	0	$ -		August					
March	7	$ 11,679.36	7	$ 25,288.30		September					

		Water Impact		Sewer Impact
Y-T-D Total	16	$29,678.11	14	$52,739.75

Building Inspection & Code Enforcement Report for May 2015

- **Building Inspections completed**:
  - March: 166
  - April: 142
  - May: 189
- **Open Code Enforcement Cases at end of month**:
  - March: 251
  - April: 251
  - May: 236
- **Code Enforcement Abatement Liens Filed during budget year 2014 - 2015:**
  - December: (11) Liens: Mowing & debris removal $1,805.00
  - March: (3) Liens: Mowing & debris removal $1,125.17
- **Code Enforcement Abatement Liens Paid during budget year 2014 - 2015:**
  - January: (1) Liens: Mowing & debris removal $619.88
  - March: (3) Liens: Mowing & Debris removal $5,866.00
  - May: (1) Lien: Mowing & Debris removal $340.06

Fire Inspector Report for May 2015

New (or annual) Inspections	**22**
Re-inspections (follow-ups)	**14**
Plan Reviews	**2**
Investigations	**1**
Consultations	**3**
Total Inspections	**42**
Outstanding Inspections	**53**

Seabrook Volunteer Fire Department

Inspections by Occupancy

Date Completed Between {05/01/2015} And {05/31/2015}

NASA3222 Aquamaid Pool Techs
3222 Nasa
Seabrook, TX 77586

Date	Time	Type	Staff Hrs	Fee
05/15/2015		200 INSPECTION - Annual	0.00	
05/21/2015		205 INSPECTION - Follow Up	0.00	
Total Activities for Occupancy: 2			**0.00**	

SHIPYARD1900 Blue Marlin Fuel Dock
1900 Shipyard DR
Seabrook, TX 77586

Date	Time	Type	Staff Hrs	Fee
05/22/2015		200 INSPECTION - Annual	0.00	
Total Activities for Occupancy: 1			**0.00**	

CARE01 Carefree Boat Club
1900 Shipyard DR
Seabrook, TX 77586

Date	Time	Type	Staff Hrs	Fee
05/22/2015		200 INSPECTION - Annual	0.00	
Total Activities for Occupancy: 1			**0.00**	

SECOND1802 Chiky's Quickmart
1802 2nd (Second) ST
Seabrook, TX 77586

Date	Time	Type	Staff Hrs	Fee
05/15/2015		205 INSPECTION - Follow Up	0.00	
Total Activities for Occupancy: 1			**0.00**	

Seabrook Volunteer Fire Department

Inspections by Occupancy

Date Completed Between {05/01/2015} And {05/31/2015}

SB Clear Lake Speed Center
2107 Seabrook CIR
Seabrook, TX 77586

Date	Time	Type	Staff Hrs	Fee
05/22/2015		200 INSPECTION - Annual	0.00	
Total Activities for Occupancy: 1			**0.00**	

NASA2901 Comfort Inn & Suites
2901 Nasa
Seabrook, TX 77586

Date	Time	Type	Staff Hrs	Fee
05/15/2015		205 INSPECTION - Follow Up	0.00	
Total Activities for Occupancy: 1			**0.00**	

COUN01 Country Wide AC/Heating
1901 Marvin CIR
Seabrook, TX 77586

Date	Time	Type	Staff Hrs	Fee
05/01/2015		205 INSPECTION - Follow Up	0.00	
Total Activities for Occupancy: 1			**0.00**	

LARRABEE1914 Crew Quarters Apartments
1914 Larabee ST
Seabrook, TX 77586

Date	Time	Type	Staff Hrs	Fee
05/15/2015		205 INSPECTION - Follow Up	0.00	
05/22/2015		205 INSPECTION - Follow Up	0.00	
Total Activities for Occupancy: 2			**0.00**	

Seabrook Volunteer Fire Department

Inspections by Occupancy

Date Completed Between {05/01/2015} And {05/31/2015}

NASA2320 Di Amici
2300 Nasa
Seabrook, TX 77586

Date	Time	Type	Staff Hrs	Fee
05/22/2015		205 INSPECTION - Follow Up	0.00	

Total Activities for Occupancy: 1 0.00

HIALEAH1908# Dimensions
1908 Hialeah DR
Seabrook, TX 77586

Date	Time	Type	Staff Hrs	Fee
05/13/2015		890 CONSULTATION - Other	0.00	

Total Activities for Occupancy: 1 0.00

NASA3101 Endeavour Marina
3101 Nasa
Seabrook, TX 77586

Date	Time	Type	Staff Hrs	Fee
05/15/2015		222 INSPECTION - Sprinkler System	0.00	

Total Activities for Occupancy: 1 0.00

SB Fun Shop
2114 Seabrook CIR
Seabrook, TX 77586

Date	Time	Type	Staff Hrs	Fee
05/22/2015		200 INSPECTION - Annual	0.00	

Total Activities for Occupancy: 1 0.00

Seabrook Volunteer Fire Department

Inspections by Occupancy

Date Completed Between {05/01/2015} And {05/31/2015}

NASA3000 Hampton Inn
3000 Nasa
Seabrook, TX 77586

Date	Time	Type	Staff Hrs	Fee
05/11/2015		710 INVESTIGATION - Cause, Fire	0.00	
Total Activities for Occupancy: 1			**0.00**	

AFFO01 Just 4 You
1002 Meyer RD
Seabrook, TX 77586

Date	Time	Type	Staff Hrs	Fee
05/29/2015		205 INSPECTION - Follow Up	0.00	
Total Activities for Occupancy: 1			**0.00**	

NASA3636 La Quinta Inn
3636 Nasa
Seabrook, TX 77586

Date	Time	Type	Staff Hrs	Fee
05/15/2015		205 INSPECTION - Follow Up	0.00	
05/29/2015		205 INSPECTION - Follow Up	0.00	
Total Activities for Occupancy: 2			**0.00**	

LAKE06 Lake Point Townhomes Hydrant
Lidstone ST
Seabrook, TX 77586

Date	Time	Type	Staff Hrs	Fee
05/29/2015		200 INSPECTION - Annual	0.00	
Total Activities for Occupancy: 1			**0.00**	

Seabrook Volunteer Fire Department

Inspections by Occupancy

Date Completed Between {05/01/2015} And {05/31/2015}

NASA 2425 Lakewood Yacht Club
2425 Nasa
Seabrook, TX 77586

Date	Time	Type	Staff Hrs	Fee
05/29/2015		200 INSPECTION - Annual	0.00	
Total Activities for Occupancy: 1			**0.00**	

BAYPORT1400 Marburgers Sporting Goods
1400 Bayport Blvd (SH 146)
Seabrook, TX 77586

Date	Time	Type	Staff Hrs	Fee
05/29/2015		200 INSPECTION - Annual	0.00	
Total Activities for Occupancy: 1			**0.00**	

NASA2720 Quality Inn
2720 Nasa
Seabrook, TX 77586

Date	Time	Type	Staff Hrs	Fee
05/29/2015		205 INSPECTION - Follow Up	0.00	
05/29/2015		822 CONSULTATION - Sprinkler System	0.00	
Total Activities for Occupancy: 2			**0.00**	

SHIPYARD Seabrook Marina
1900 Shipyard DR
Seabrook, TX 77586

Date	Time	Type	Staff Hrs	Fee
05/22/2015		200 INSPECTION - Annual	0.00	
Total Activities for Occupancy: 1			**0.00**	

Seabrook Volunteer Fire Department

Inspections by Occupancy

Date Completed Between {05/01/2015} And {05/31/2015}

SEAB02 Seabrook Marina Office
1900 Shipyard DR
Business Office
Seabrook, TX 77586

Date	Time	Type	Staff Hrs	Fee
05/22/2015		200 INSPECTION - Annual	0.00	
Total Activities for Occupancy: 1			**0.00**	

LAKESIDE3300 Seabrook United Methodist Church
3300 Lakeside DR
Seabrook, TX 77586

Date	Time	Type	Staff Hrs	Fee
05/15/2015		200 INSPECTION - Annual	0.00	
Total Activities for Occupancy: 1			**0.00**	

FIFTH1402 Seabrook Waffle House
1402 5th (Fifth) ST
Seabrook, TX 77586

Date	Time	Type	Staff Hrs	Fee
05/15/2015		205 INSPECTION - Follow Up	0.00	
Total Activities for Occupancy: 1			**0.00**	

TIRE01 Tires By Design
2801 Nasa
Seabrook, TX 77586

Date	Time	Type	Staff Hrs	Fee
05/15/2015		222 INSPECTION - Sprinkler System	0.00	
05/15/2015		201 INSPECTION - Final	0.00	
05/15/2015		221 INSPECTION - Fire Alarm	0.00	
05/22/2015		205 INSPECTION - Follow Up	0.00	

Seabrook Volunteer Fire Department

Inspections by Occupancy

Date Completed Between {05/01/2015} And {05/31/2015}

TIRE01 Tires By Design
2801 Nasa
Seabrook, TX 77586

Date	Time	Type	Staff Hrs	Fee
Total Activities for Occupancy: 4			0.00	

BAYPORT2144 Tobacco Store
2144 Bayport Blvd (SH 146)
Seabrook, TX 77586

Date	Time	Type	Staff Hrs	Fee
05/29/2015		200 INSPECTION - Annual	0.00	
Total Activities for Occupancy: 1			0.00	

TOOK01 Tookie's Seafood
1100 Bayport Blvd (SH 146)
Seabrook, TX 77586

Date	Time	Type	Staff Hrs	Fee
05/29/2015		121 PLAN REVIEW - Fire Alarm	0.00	
05/29/2015		822 CONSULTATION - Sprinkler System	0.00	
Total Activities for Occupancy: 2			0.00	

TOWE01 Towers @ Seabrook
Bayport Blvd (SH 146)
Seabrook, TX 77586

Date	Time	Type	Staff Hrs	Fee
05/01/2015		821 CONSULTATION - Fire Alarm	0.00	
Total Activities for Occupancy: 1			0.00	

Seabrook Volunteer Fire Department

Inspections by Occupancy

Date Completed Between {05/01/2015} And {05/31/2015}

UEBE01 Uebert, Ericka (Foster Care)
1848 CAPRI LN
Seabrook, TX 77586

Date	Time	Type	Staff Hrs	Fee
05/29/2015		200 INSPECTION - Annual	0.00	

Total Activities for Occupancy: 1 0.00

BAYPORT1810 Vacant
1810 Bayport Blvd (SH 146)
Seabrook, TX 77586

Date	Time	Type	Staff Hrs	Fee
05/22/2015		200 INSPECTION - Annual	0.00	

Total Activities for Occupancy: 1 0.00

SBCIRCLE2113 Vacant
2113 Seabrook CIR
Seabrook, TX 77586

Date	Time	Type	Staff Hrs	Fee
05/22/2015		200 INSPECTION - Annual	0.00	

Total Activities for Occupancy: 1 0.00

VACA12 Vacant (Personal Storage)
2111 Seabrook CIR
Seabrook, TX 77586

Date	Time	Type	Staff Hrs	Fee
05/22/2015		200 INSPECTION - Annual	0.00	

Total Activities for Occupancy: 1 0.00

Seabrook Volunteer Fire Department

Inspections by Occupancy

Date Completed Between {05/01/2015} And {05/31/2015}

VACA11 Vacant (personal storage)
2109 Seabrook CIR
Seabrook, TX 77586

Date	Time	Type	Staff Hrs	Fee
05/22/2015		200 INSPECTION - Annual	0.00	
Total Activities for Occupancy: 1			**0.00**	

BAYPORT1902 Walgreens
1902 Bayport Blvd (SH 146)
Seabrook, TX 77586

Date	Time	Type	Staff Hrs	Fee
05/15/2015		205 INSPECTION - Follow Up	0.00	
Total Activities for Occupancy: 1			**0.00**	

SEABROOKCIR2 Weight Tech
2105 Seabrook CIR
Seabrook, TX 77586

Date	Time	Type	Staff Hrs	Fee
05/22/2015		200 INSPECTION - Annual	0.00	
Total Activities for Occupancy: 1			**0.00**	

Grand Total Activities: 42 **Grand Totals:** 0.00 0.00

CITY OF SEABROOK

AGENDA BRIEFING

Date of Meeting: June 21, 2016

Submitter/Requestor: Sean Landis **Date Submitted:** June 9, 2016

Presenter: Sean Landis

Description/Subject: A request was made by the developer (Pacific Ridge Properties) to amend the Seabrook City Code, Appendix A, "Comprehensive Zoning", Article 4, "Special Use Regulations", by creating a new Section 4.16 "Seabrook Town Center Overlay District Regulations", and to amend Article 3, Section 3.15, "Comprehensive Land Use Matrix", by adding "Seabrook Town Center Overlay District", "Uses", permitted by right and by conditional use.

AN ORDINANCE AMENDING THE SEABROOK CITY CODE, APPENDIX A, COMPREHENSIVE ZONING, ARTICLE 4, "SPECIAL USE REGULATIONS", SECTION 4.16 "SEABROOK TOWN CENTER OVERLAY DISTRICT REGULATIONS", BY ADDING SITE AND ARCHITECTURAL REGULATIONS FOR THE AREA KNOWN COMMONLY AS "SEABROOK TOWN CENTER", AND AMENDING SECTION 3.15, "COMPREHESIVE LAND USE MATRIX", ACORDINGLY BY ADDING "SEABROOK TOWN CENTER OVERLAY DISTRICT" "USES" PERMITTED BY RIGHT AND BY CONDITIONAL USE WITHIN SUCH DISTRICT. FOR THE PURPOSES OF THIS ORDINANCE "SEABROOK TOWN CENTER" SHALL CONSIST OF THE AREA LYING WEST OF THE WESTERN EDGE OF STATE HIGHWAY 146 RIGHT-OF-WAY, NORTH OF VERMILLION DRIVE REAR PROPERTY LINES, EAST OF ED WHITE ELEMENTARY SCHOOL, SOUTH OF OAK DALE WAY REAR PROPERTY LINES, AND SOUTH OF SEABROOK METHODIST CHURCH, PROVIDING FOR A PENALTY IN AN AMOUNT NOT TO EXCEED $2000 PER OFFENSE FOR VIOLATION OF ANY PROVISION HEREOF BY INCLUSION INTO THE CODE; REPEALING ALL ORDINANCES OR PARTS OF ORDINANCES INCONSISTENT OR IN CONFLICT HEREWITH; AND PROVIDING FOR SEVERABILITY.

Name of Applicant (if applicable) : Pacific Ridge Properties

Legal Description (if applicable): A map of the proposed district is located within the attached Overlay District Ordinance Language.

Purpose/Need: Policy Issue

Background/Issue (What prompted this need?)**:** At the request of the Seabrook Town Center developer (Pacific Ridge Properties) text was drafted to create an "Overlay District". The Seabrook Town Center Commercial Development Overlay District ("STCOD") is intended to create rules that promote an attractive mixed-use retail

commercial development exhibiting an overall desirable appearance with enduring quality. The overlay will provide direction to the tenant/owner/developer by defining certain design elements and areas which should be common to the project and will unify its overall design.

Impacted Parties (Expected/Notified)**:** Surrounding properties located within 500'

Miscellaneous Comments: N/A

Recommended Action: The Planning and Zoning Commission at their regular scheduled meeting held on May 19th, 2016, considered an amendment to the Seabrook City Code, Appendix A, “Comprehensive Zoning”, Article 4, “Special Use Regulations”, by creating a new Section 4.16 “Seabrook Town Center Overlay District Regulations", and to amend Article 3, Section 3.15, "Comprehensive Land Use Matrix", by adding "Seabrook Town Center Overlay District", "Uses", permitted by right and by conditional use.

The Commission after hearing testimony from City Staff along with the General Public voted to recommend approval of the “Overlay District” as presented by city staff. The vote was six to approve with one abstaining vote.

Ayes: Miller, DeHart, Caradec, Hammann, Potts, and Sharpe
Nays:
Abstained: Davis

Attachments:
(1.)Copy of Proposed Seabrook Town Center Overlay District Ordinance Language.
(2.)Copy of Proposed Changes to the Zoning Land-Use Matrix.

Fiscal Impact:

Finance Officer Review	☐ Yes	☒ No
Budgeted	☐ Yes	☒ No
Budget Amendment Required	☐ Yes	☒ No

Budget Dept/Line Item Number: N/A
Future/Ongoing Impact: N/A

Funding Comments: N/A

Where on the agenda should this item be placed? Specific Public Hearing

Suggested Motion:

(All items are to be reviewed and approved by the city manager, except items submitted by the mayor or any council member or routine consent agenda items such as minutes and second & third readings of ordinances.)

All requests must be submitted to the City Secretary's Office no later than 12:00 p.m. on the Monday, one week prior to the regular Tuesday Council Meeting. All required attachments are to be submitted with the request. Incomplete items cannot be placed on the agenda.

Sent to City Attorney for review on

Approved by City Attorney on
(City Attorney should review all ordinances, resolutions, contracts and executive session items.)

All requests must be submitted to the City Secretary's Office no later than 12:00 p.m. on the Monday, one week prior to the regular Tuesday Council Meeting. All required attachments are to be submitted with the request. Incomplete items cannot be placed on the agenda.

Planning & Zoning Commission
OFFICIAL REPORT

The Planning and Zoning Commission of the City of Seabrook met on May 19, 2016 to hold a meeting to consider:

Request for an amendment to the Seabrook City Code, Appendix A, "Comprehensive Zoning", Article 4, "Special Use Regulations", Section 4.16 "Seabrook Town Center Overlay District Regulations".

THE PLANNING & ZONING COMMISSION MADE THE FOLLOWING RECOMMENDATION:

APPROVAL ■ **APPROVAL WITH AMENDMENTS/CONDITIONS (SEE BELOW)** □ **DENIAL** □
by a concurring vote of a majority of members of the Planning and Zoning Commission present at the meeting on May 19, 2016, as designated below and as certified by the signature of the Chairman. **This document is not valid unless signed by the Chairman/Presiding Commissioner.**

VOTE:	AYE	NAY	ABSTAINED	ABSENT	INITIAL
Rosebud Caradec	RC				RC
Laura Davis			LD		LD
Mike DeHart	MD				MD
Buddy Hammann					
Dodie Miller	DM				DM
Michael Potts	MP				MP
Michael Sharpe	MDS				MDS

Michael Potts
Michael Potts, Chairman
Planning & Zoning Commission

ATTEST:
Alesia L. Hammock
Alesia L. Hammock
Secretary

CITY OF SEABROOK
ORDINANCE NO. 2016-16

AN ORDINANCE AMENDING THE SEABROOK CITY CODE, APPENDIX A, COMPREHENSIVE ZONING, ARTICLE 4, "SPECIAL USE REGULATIONS", CREATING A NEW SECTION 4.16 "SEABROOK TOWN CENTER OVERLAY DISTRICT REGULATIONS", SUCH DISTRICT CONSISTING OF THE AREA LYING WEST OF THE WESTERN EDGE OF STATE HIGHWAY 146 RIGHT-OF-WAY, NORTH OF VERMILLION DRIVE REAR PROPERTY LINES, EAST OF ED WHITE ELEMENTARY SCHOOL, SOUTH OF OAK DALE WAY REAR PROPERTY LINES, AND SOUTH OF SEABROOK METHODIST CHURCH, AS FURTHER DEPICTED IN ATTACHMENT A, HEREIN, BY ADDING SITE AND ARCHITECTURAL REGULATIONS FOR THE AREA KNOWN COMMONLY AS "SEABROOK TOWN CENTER", AND AMENDING SECTION 3.15, "COMPREHESIVE LAND USE MATRIX", ACORDINGLY BY ADDING "SEABROOK TOWN CENTER OVERLAY DISTRICT" "USES" PERMITTED BY RIGHT AND BY CONDITIONAL USE WITHIN SUCH DISTRICT; RECODIFIYING THE CURRENT SECTION 4.16 "TELECOMMUNICATION TOWERS AND ANTENNAE" UNDER A NEW SECTION 4.25 UNDER THE SAME TITLE, TO ALLOW FOR FUTURE EXPANSION OF ARTICLE 4; PROVIDING FOR A PENALTY IN AN AMOUNT NOT TO EXCEED $2000 PER OFFENSE FOR VIOLATION OF ANY PROVISION HEREOF BY INCLUSION INTO THE CODE; REPEALING ALL ORDINANCES OR PARTS OF ORDINANCES INCONSISTENT OR IN CONFLICT HEREWITH; AND PROVIDING FOR SEVERABILITY.

WHEREAS, the City Council of the City of Seabrook is continually reviewing the provisions of the City Code of Ordinances relating to land use and other circumstances which generally impact the health, safety and well-being of residents, citizens and inhabitants; and

WHEREAS, the Planning and Zoning Commission, in cooperation with the property owners, have studied, reviewed and prepared special use regulations for consideration by City Council to address the uniform development in relation to uses for property within the area lying west of the western edge of State Highway 146 right-of-way, north of the Vermillion Drive rear property lines, east of Ed White Elementary School, south of Oak Dale Way rear property lines, and south of Seabrook Methodist Church as shown in Attachment A, which is made a part of this Ordinance, (the "Tract'); and

WHEREAS, all public notices have been published, mailed and provided in accordance with statute and the City Code of Ordinances, Appendix A of the City Code of Ordinances (Zoning Code); and

WHEREAS, the Planning and Zoning Commission recommended approval of this zoning change for the Tract, commensurate with the addition of site, architectural and related design standards and uses at its meeting of May 19, 2016, and has made its final report; and

WHEREAS, the City Council and the Planning and Zoning Commission of the City of Seabrook have studied the present provisions of the Code of Ordinances of the City of Seabrook and have determined the need to update the provisions relative to special uses of Tract for reference in the land use matrix; and

WHEREAS, the City Council now desires to recodify the current Section 4.16 entitled "Telecommunication Towers and Antennae" under a new Section 4.25 under the same title, to allow for future expansion of Article 4, "Special Use Regulations"; and

WHEREAS, all public notices have been posted, published and all required hearings on this matter have been held in accordance with the Comprehensive Zoning Ordinance and law; now, therefore,

BE IT ORDAINED BY THE COUNCIL OF THE CITY OF SEABROOK, STATE OF TEXAS:

SECTION 1. FINDINGS OF FACT.

That the facts and matters set forth in the preamble of this Ordinance are hereby found to be true and correct.

SECTION 2. AMENDMENT TO THE SEABROOK CITY CODE, APPENDIX A, ARTICLE 4, SECTION 4.16.

The Code of Ordinances of the City of Seabrook, Appendix A, "Comprehensive Zoning", Article 4, "Special Use Regulation", is hereby amended by creating a new Section 4.16 entitled "The Seabrook Town Center Overlay District Regulations" to establish design regulations, including site, architectural and related design standards and regulations for developments within the area lying west of the western edge of State Highway 146 right-of-way, north of the Vermillion Drive rear property lines, east of Ed White Elementary School, south of Oak Dale Way rear property lines, and south of Seabrook Methodist Church as shown in Attachment A, (the "Tract"), which is made a part of this Ordinance.

The Tract to be rezoned is shown in Attachment A, Section 4.16 which is incorporated herein by reference.

Upon passage of this Ordinance, the official zoning map of the City of Seabrook shall be amended to reflect this change.

<u>SECTION 3.</u> AMENDMENT TO THE SEABROOK CITY CODE, APPENDIX A, ARTICLE 3, SECTION 3.15.

The Code of Ordinances of the City of Seabrook, Appendix A, "Comprehensive Zoning", Article 3, "Establishment of Zoning Districts and Associated Regulations", Section 3.15 "Comprehensive Land Use Matrix", is hereby amended by adding "Seabrook Town Center Overlay District (STCOD)", "Uses", permitted by right and by conditional use within such district as shown in Attachment B, which is made part of this Ordinance.

<u>SECTION 4</u>. AMENDMENT TO THE SEABROOK CITY CODE TO RECODIFY THE CURRENT SECTION 4.16, UNDER A NEW SECTION 4.25.

The Code of Ordinances of the City of Seabrook, Appendix A, "Comprehensive Zoning", Article 4, "Special Use Regulation", is hereby amended to recodify the prior Section 4.16 entitled "Telecommunication Towers and Antennae" under a new Section 4.25 under the same title, to allow for future expansion of Article 4.

<u>SECTION 5</u>. INCORPORATION INTO THE CODE, PENALTY CLAUSE.

This Ordinance is hereby incorporated and made a part of the Seabrook City Code. Violation of this Ordinance is subject to the penalty section of said Code including, Section 11.06, "Criminal Enforcement" which provides that any person who shall violate any provision of this Ordinance shall be deemed guilty of a misdemeanor and, upon conviction, shall be fined in an amount not to exceed $2,000.00. Each day of violation shall constitute a separate offense.

<u>SECTION 6</u>. REPEAL OF CONFLICTING ORDINANCES.

All ordinances or parts of ordinances in conflict or inconsistent with this Ordinance are hereby expressly repealed.

<u>SECTION 7.</u> SEVERABILITY.

In the event any clause phrase, provision, sentence, or part of this Ordinance or the application of the same to any person or circumstances shall for any reason be adjudged invalid or held unconstitutional by a court of competent jurisdiction, it shall not affect, impair, or invalidate this Ordinance as a whole or any part or provision hereof other than the part declared to be invalid or unconstitutional; and the City Council of the City of Seabrook, Texas, declares that it would have passed each and every part of the same notwithstanding the omission of any such part thus declared to be invalid or unconstitutional, whether there be one or more parts.

<u>SECTION 8</u>. NOTICE.

The City Secretary shall give notice of the enactment of this Ordinance by promptly publishing it or its descriptive caption and penalty after final passage in the official newspaper of the City; the Ordinance to take effect upon publication.

PASSED AND APPROVED on first reading this _____ day of _____, 2016.

PASSED AND APPROVED on second and final reading this _____day of _____, 2016.

BY: _____
Glenn Royal, Mayor

ATTEST:

By: _____
Robin Hicks, TRMC
City Secretary

APPROVED AS TO FORM:

_____
Steven L. Weathered
City Attorney

Attachment A.

Sec. 4.16. The Seabrook town center commercial development overlay district regulations.

4.16.01. Purpose: The Seabrook Town Center Commercial Development Overlay District ("STCOD") is intended to promote an attractive mixed-use retail commercial development exhibiting an overall desirable appearance with enduring quality. The overlay will provide direction to the tenant/owner/developer by defining certain design elements and areas which should be common to the project and will unify its overall design. The standards that follow allow for and promote design integration. The city has conducted extensive study for the purposes of establishing the regulations that follow:

4.16.02. Applicability: All new developments and changes to existing developments in the district that require site plan or building permit approval are subject to the requirements of the overlay district in addition to other applicable regulations in the City's Code of Ordinances. Nothing contained in this section 4.16 shall be deemed to reduce applicable requirements contained in other sections of this Code, or any ordinance specifically applicable to a development (e.g., conditional use permit or planned unit development), but instead to enhance the aesthetics and associated uses of this overlay district.

4.16.03. Boundaries of the overlay district: The Seabrook Town Center Commercial Development overlay district ("STCOD") shall consist of the area lying west of the western edge of (State Highway 146 right-of-way, north of Vermillion Drive rear property lines, east of Loch Lake Drive rear property lines, east of Ed White Elementary School, south of Oak Dale Way rear property lines, and south of Seabrook Methodist Church.

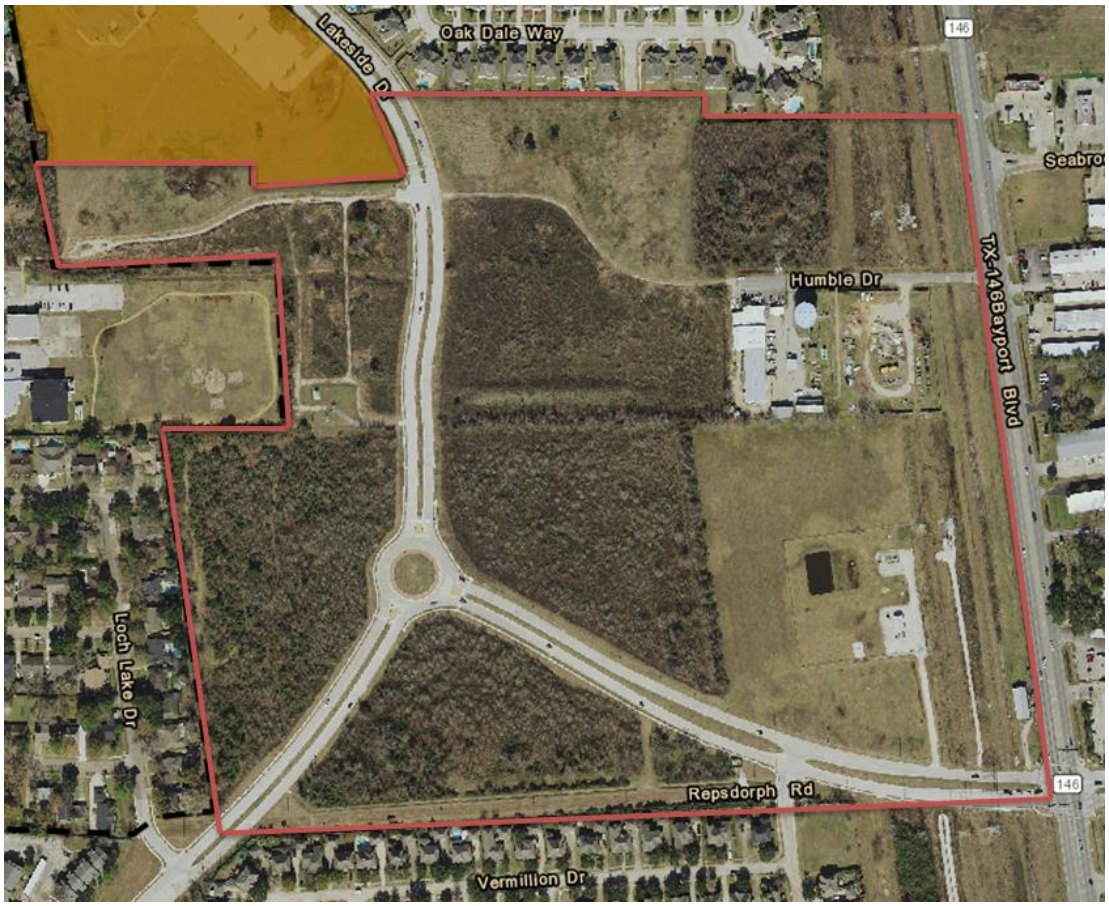

*4.*16.04. *Submission and plan review procedures:*

A. Application submittals*:* A completed building permit application form and three (3) sets of plans printed at a standard architectural sheet size of a minimum of (24”X 36”) along with one electronic copy in PDF format, and include the following:

1. Site Survey.

2. Site improvement details such as building(s), parking lot(s) and or garage, curbing, walks, culvert, fences, water quality elements, screens, and mechanical equipment.

3. Civil plans that include existing and proposed grades and wet/dry utilities with sizes and locations.

4. Building plans and elevations (one copy of a colored elevation is needed). Samples of all exterior building materials to show color, texture, and finish.

5. A separate Landscape Plan(s) showing all vegetation setbacks, existing and proposed plant material, and irrigation to be installed (irrigation should be to shoulder of road within jurisdictional codes, ordinances, etc).

6. Site and exterior building Lighting Plan with Lumens per acre calculations and photo metrics including average light levels achieved.

7. Location and details for all exterior signage whether freestanding or building mounted (Signage Plan).

8. Construction access and staging areas.

4.16.05. Uses: Uses permitted by right and by conditional use shall be governed by Section 3.15, “Comprehensive land use regulation matrix” STCOD District.

4.16.06. Area Regulations:

Street Setback Criteria						
	Landscape & Parking Setbacks			**Building Setbacks**		
	Front	Side**	Rear	Front	Side*	Rear
Streets						
SH 146	20’	5’	5’	40’	40’	10’
Repsdorph	15’	5’	5’	25’	25’	10’
Lakeside	15’	5’	5’	25’	25’	10’

*For Lots where buildings abut each other for a contiguous shopping center, the Building Side Setback can be 0’.

**For Lots where the lot line runs in the middle of a driveway for a contiguous shopping center, the Landscape Setback can be 0'.

	Side Building Setback Requirements			
Land Use	Adjoining Thoroughfare	Adjoining Collector	Adjoining R-1 – R-2 Single Family	Adjoining Commercial
Commercial	25'	25'	50'	Per IBC

	Rear Building Setback Requirements			
Land Use	Rearing Thoroughfare	Rearing Collector	Adjoining R-1 – R-2 Single Family	Adjoining Commercial
Office	10'	10'	50'	10'
Retail	10'	10'	50'	10'

4.16.07. Building height: No building or structure shall have a finished floor whose elevation exceeds 74 feet 11 inches above finished grade. Structures exceeding 50 feet in height shall require a conditional use permit and shall be set back from properties zoned R-1 and R-2 a distance equal to the height of the structure. This setback shall not apply to church steeples, spires, belfries, cupolas, or other normal appurtenances usually required to be placed above the roof level and not intended for human occupancy.

4.16.08. Buffering and screening:

A. Special Landscape Area: (Graphic 4-A delineates the Special Landscape Area boundaries) the area within 50' of contiguous and adjoining R-1 zoned properties located in the Special Landscape Area shall meet the following standards:

1. Pervious, landscaped area
2. No drives or parking
3. No commercial or retail use
4. Irrigated and maintained by the owner thereof in good order, appropriately trimmed and clear of trash/debris.

B. Special Screening /Buffering: Along the Boundary with contiguous and adjoining R-1 zoned properties located in the Special Landscape Area, the following requirement shall apply:

1. 8' masonry wall without openings

2. Trees no shorter than 8’ tall and in a quantity of no less than one tree per four feet of boundary wall shall be planted, maintained, and replaced as required. The lay out shall be approved by the City Planning Director at the time of plan approval for the Project. The trees shall be appropriately irrigated.

C. Special Setbacks for Certain Uses: The following uses must be setback 75’ from the following distances from contiguous and adjoining R-1 zoned properties located in the Special Landscape Area:

1. Loading Docks

2. Trash Dumpsters

3. Open Storage

Graphic 4-A
Special Landscape Area

4.16.09. Outside storage and display: Outside storage, display, and sales is only permitted for Single Tenants that exceed 50,000 SF of Gross Interior Square Footage. Outside Storage must be screened from view from all public streets with the use of screening walls, landscaping, or berms. Outside display and sales areas must be out of traffic circulation areas and maintained at all times to keep the area clean and free of debris and trash.

4.16.10. Parking: Concrete paving on any Lot shall be used for all paving surfaces of sufficient thickness to withstand the anticipated commercial traffic based on sound Geotechnical Engineering recommendations for the Lot. Paint Striping for Fire Lanes shall be per City requirements. Paint Striping for Parking and Traffic Control shall be 4" in width, White Traffic Paint, of the Best Commercial Quality. Pavers are required at all driveway entry points from a Public Right Of Way. Pavers shall be set on recessed 7" paving according to City standards. Pavers to start 15' inside of the Lot and extend to 25' inside the Lot and run the full width of the driveway. Pavers shall be modular concrete pavers, "Holland Stone – Antique Buff" color by Pavestone or approved equivalent. Paver areas shall be framed with 2 Soldier courses and then filled in with a Parquet pattern. Required parking shall be in accordance with Section 5, specifically including Section 5.04, Table 5-C, "Required Parking Spaces by Land Use Category" of Appendix "A" of the Code of Ordinances.

4.16.11. Landscaping: Each Lot shall have to be landscaped in accordance with the following guidelines and include a complete irrigation system. Preservation of healthy and desirable trees is encouraged where reasonable and should be considered in the design and layout of each Lot.

A. Plants shall be selected from Table 4-A "Approved Plant List". These materials have been selected because they are generally native, drought resistant, and non-invasive. These same characteristics should be considered for seasonal color plantings also. Landscaped Islands, Setback Areas, and Green Spaces to include Solid Sod Bermuda Grass where mulched beds are not used.

B. All Plant material shall be sound, healthy specimens typical of their species, free from injurious insects or disease. Plant proportions shall be those recognized as normal for a well grown plant of that species and size, as used by the American Standard for Nursery Stock. Caliper for sizes shall be taken on the trunk 6" to 12" above natural ground.

C. Street Trees and Shrubs: One Tree will be required for every 50' of Street Frontage per Lot to be placed in the Landscape Setback. These trees can be clustered for planting so long as the quantity is met. Street Trees shall be 65 gallon, 3 ½" minimum caliper, and 12'-14' in height at time of planting. (Street Trees and Shrubs will not be required for SH 146 Frontage.) Twenty-five (25) shrubs will be required for each 75' of Street Frontage per Lot to be placed in the Landscape Setback. These shrubs shall be planted at 36" on center. Shrubs shall be minimum 3 gallon size.

D. Planting Islands: Parking rows should have Landscaped Islands on each end of the rows which shall contain one to two trees in each island depending on the reasonable planting and island size. If, at anytime, the required vegetation becomes diseased, deteriorated, or dies, the owner of the premises must replace the vegetation within 30 days of written notice of the city.

Table 4-A
Approved Plant List

APPROVED PLANT LIST

Small Trees	Common Name	Reforestation Species
Bumelia celastrina	Tropical Buckthorn	Yes
Cercis canadensis	Redbud	Yes
Chionanthus virginicus Fringe Tree		
Comus florida	Dogwood	
Diospyros virginiana	Eastern Persimmon	
Hamameys Virginiana	Witch Hazel	
Lagerstroemia indica	Crepe Myrtle	
Malus Spp.	Crabapple	
Pistacia texana	Texas Pistache	Yes
Prunus mexicana Mexican Plum		
Pyrus calleryana bradfordii	Bradford Pear	
Sophora spp.	Mountain Laurel	

Medium & Large Trees

Acer Rubrum "Drummondii"	Swamp Maple	Yes
Betula nigra	River Birch	
Carya illinoinensis	Pecan	
Celtis laevigata	Southern Hackberry	Yes
Fraxinus americana	White Ash	
Fraxinus pennsylvanica	Green Ash	Yes
Juglans nigra	Black Walnut	
Liquidamber styraciflua	Sweetgum	Yes
Liriodendron tulipifera	Tulip Tree	
Magnolia grandiflora	Southern Magnolia	
Ostrya virginiana	American Hop Hornbeam	
Pinus taeda	Loblolly Pine	Yes
Platanus mexicana	Mexican Sycamore	
Platanus occidentalis	American Sycamore	
Quercus falcata	Swamp Red Oak	Yes
Quercus glaucoides	Lacey Oak	
Quercus michauxii	Swamp Chestnut Oak	
Quercus macrocarpa	Bur Oak	Yes
Quercus shumardii	Shumard Oak	
Quercus texana	Red Oak	
Quercus texana nuttall	Nuttall Oak	Yes
Quercus virginiana	Live Oak	
Sabal Texana (Mexicana)	Texas Sabal	
Taxodium distichum	Bald Cypress	Yes
Ulmus crassifolia	Cedar Elm	Yes

Shrubs, Dwarf Shrubs & Plants

Azalea	Azalea	
Abelia grandiflora prostrata	Dwarf Abelia	
Berberis thumbergii	Pigmy Barberry	
Gardenia radicans	Dwarf Gardenia	
Hesperaloe parviflora	Red Yucca	
Ilex Spp.	Holly-Yaupon	
Lantana horrida T	exas Lantana	
Nandina domestica nana	Dwarf Nandina	
Poliomintha longifolia	Mexican oregano	
Penstemon baccharifolius	Red Penstemon	
Pittosporum tobira	Dwarf Pittosporum	
Rosemarinus officinalis	Rosemary	
Salvia leucantha	Mexican Brush Sage	

Small Shrubs & Plants

Abelia Spp.	Abelia	
Anisacanthus wrightii	Hummingbird Bush	
Aucuba japonica	Aucuba	
Buxus Spp.	Boxwood	
Callicarpa americana	American Beauty Berry	Yes
Chaenomeles japonica	Flowering Quince	
Gardenia Spp.	Gardenia	
Hydrangea macrophylla	Hydrangea	
Opuntia compressa	Lowprickly pear cactus	
Malvaviscus drummondii	Turk's Cap	Yes
Opuntia engelmannii texana	Flaming prickly pear cactus	
Opuntia engelmannii linguiformis	Cow's tongue prickly pear cactus	
Opuntia leptocarpa Mackenson	prickly pear cactus	
Pavonia lasiopetala	Rock Rose	
Pistacia texana	Texas Pistachio	Yes
Raphiolepis indica	Indian Hawthorne	
Spiraea prunifolia	Bridal Wreath Spirea	
Yucca pallida	Paleleaf Yucca	
Yucca torreyi	Spanish Bayonet Yucca	

Medium Shrubs & Plants

Azalea indicum Indica	Azalea	
Buddleia Spp.	Butterfly Bush	
Camellia Spp.	Camellia	
Elaeagnus fruitlandi	Silverberry	
Feijoa sellowiana	Pineapple Guava	
Hibiscus coccineus	Texas Star Hibiscus	Yes
Hibiscus syriacus	Althea	
Ilex Spp.	Holly-Yaupon	Yes
Ilex decidua	Possumhaw	Yes
Jasminum Spp.	Jasmine	
Lagerstroemia indica "dwarf"	Dwarf Crepe Myrtle	
Leucophyllum frutescens	Texas Sage	
Ligustrum texanum	Wax Leaf Ligustrum	

Lonicera fragrantissima	Winter Honeysuckle	
Malvaviscus drummondii	Turk's Cap	Yes
Crinum americanum	Crinum Lily	
Liriope Spp.	Lily Turf	
Lupinus texensis	Bluebonnet	
Lantana camara	Lantana	
Ophiopogon japonicum	Monkey grass	
Opuntia compressa	Low prickly pear cactus	
Opuntia engelmannii texana	Flaming prickly pear cactus	
Opuntia engelmannii linguiformis C	ow's tongue prickly pear cactus	
Opuntia leptocarpa	Mackenson prickly pear cactus	
Osmunda cinnamomea	Cinnamon Fern	Yes
Osmunda regalis	Royal Fern	Yes
Saururus cernuus	Lizardtail	
Sedum Spp.	Sedum	
Verbena peruviana	Peruvian Verbena	
Vinca minor and major	Vinca	
Woodwardia aereolata	Chain Fern	Yes

Grasses Lawn and Ornamental

Cynodon dactylon	Common Bermuda	
Buchloe dactyloides	Buffalo Grass	
Bouteloua gracilis	Blue Grama	Yes
Bouteloua curtipendula	Sideoats Grama	
Muhlenbergia capillaris	Gulf Muhly	Yes
Muhlenbergia lindheimeri	Lindheimer Muhly	Yes
Schizachyrium scoparium	Little Bluestem	
Stipa tenuissima	Mexican Feather Grass	Yes

4.16.12. Sidewalks: The pedestrian paving will be constructed either within appropriate public street rights-of-ways and/or within the Landscape Setbacks. All walks must be constructed in a consistent workmanlike manner.

A. Minimum construction requires sidewalks to be four inches (4") thick with #3 reinforcement at eighteen inches (18”) on center both ways. Public Sidewalks located within the City or County right-of -way shall be a minimum of five feet wide. No cold joints are permitted. Complete pours between expansion joints are required. Drill dowels into existing concrete curbs and driveways and use expansion joints with slip dowels at connections of existing and new concrete. Dowels are to be stubbed out where sidewalk is to be continued in the future.

B. Sidewalk elevations shall match with the existing manhole and valve box elevations. If adjustments of the height are required, Owner shall notify the Seabrook Public Works Department (24 hours) prior to sidewalk construction. If adjustments must be made, the Owner-builder/site developer will be responsible for such adjustments. Handicap ramps are required at every street and other locations required by **Americans with Disabilities Act of 1990 (ADA)** as amended.

4.16.13. Site lighting:

A. A lighting photometric drawing, as part of the Lighting Plan, shall be submitted depicting the design layout and illustrating a point-by-point foot-candle lighting to achieve a minimum average level of four foot (4') candles with a maximum/minimum uniformity ratio not to exceed (10:1). All office building lighting will achieve a minimum average lighting level of four foot (4') candles. The types, size, and style of the lighting fixtures shall also appear in the form of a schedule to the Lighting Plan.

B. All parking lot pole mounted lighting shall use the "GE Evolve LED lighting fixture with a minimum wattage of three hundred and fifteen (315) watts. Fixtures and poles shall have a powder-coated finish and shall be black color finish. Standards for parking lots shall be a maximum of thirty-nine feet (39') tall, on a 30" diameter, 30" tall concrete base that is painted white to match the traffic marking paint, and shall have a Glare light shield fixture. The arrangement of parking lot and drive way lights should provide adequate light coverage at all parcel entries and exits.

C. Buildings shall be adequately lit at night. Light fixtures shall be attractive, efficient, and shall not create Glare or spillover into adjacent properties. No flood lights shall be mounted on buildings except for wall packs at the rear of the buildings. Where used, the wall packs must be shielded to prevent light trespass onto adjoining properties.

D. Spillover at perimeter property lines shall be 0.00 foot-candles measured along the property line at a height of 30" above grade. Lighting fixtures located across or adjacent to R-1 and R-2 Single Family Residential Districts shall use "House Side Shields" to minimize glare.

E. Exterior lighting must enhance the atmosphere and safety of all public parking areas, walkways and entrances. Lighting shall be low key and placement of fixtures shall coincide with major walkway areas.

F. Choice of light fixtures and poles, other than parking lot light fixtures, must reflect the theme and architecture of the Project. Structure illumination shall be lit with a concealed, stationary-shielded light source.

G. All areas within the Property must be illuminated with area and decorative lighting continuously during operating hours or from dusk until at least 12:00 a.m. Each Owner of a Tract within the Project shall maintain at least one (1) exterior night light. Where multiple parcels/buildings are under one ownership, for the purposes of this exterior night light requirement, each tract shall be considered a separate tract.

H. Provided however, notwithstanding subsections (A) and (B) above, an applicant may present to the planning and zoning commission, on the site plan, specifications which include alternative materials if they meet or exceed the appearance and atmosphere requirements above and appear better suited under the circumstances.

4.16.15. Signage: Signage in the Overlay District shall be uniform in materials and general appearance.

A. Ground Sign Types: Three types of Multi Tenant on premise Ground Sign types will be allowed and must all be permitted through the City.

1. The signage shall be constructed in accordance with Graphic 4-B and 4-H.

Graphic 4-B
60’ Max Height Multi-Tenant Ground Sign.

Graphic 4-C
50’ Max Height Multi-Tenant Ground Sign.

Graphic 4-D

30’ Max Height Multi-Tenant Ground Sign.

2. The signage shall be located in accordance with Graphic 4-E.

Graphic 4-E
Multi-Tenant Ground Sign Location Map.

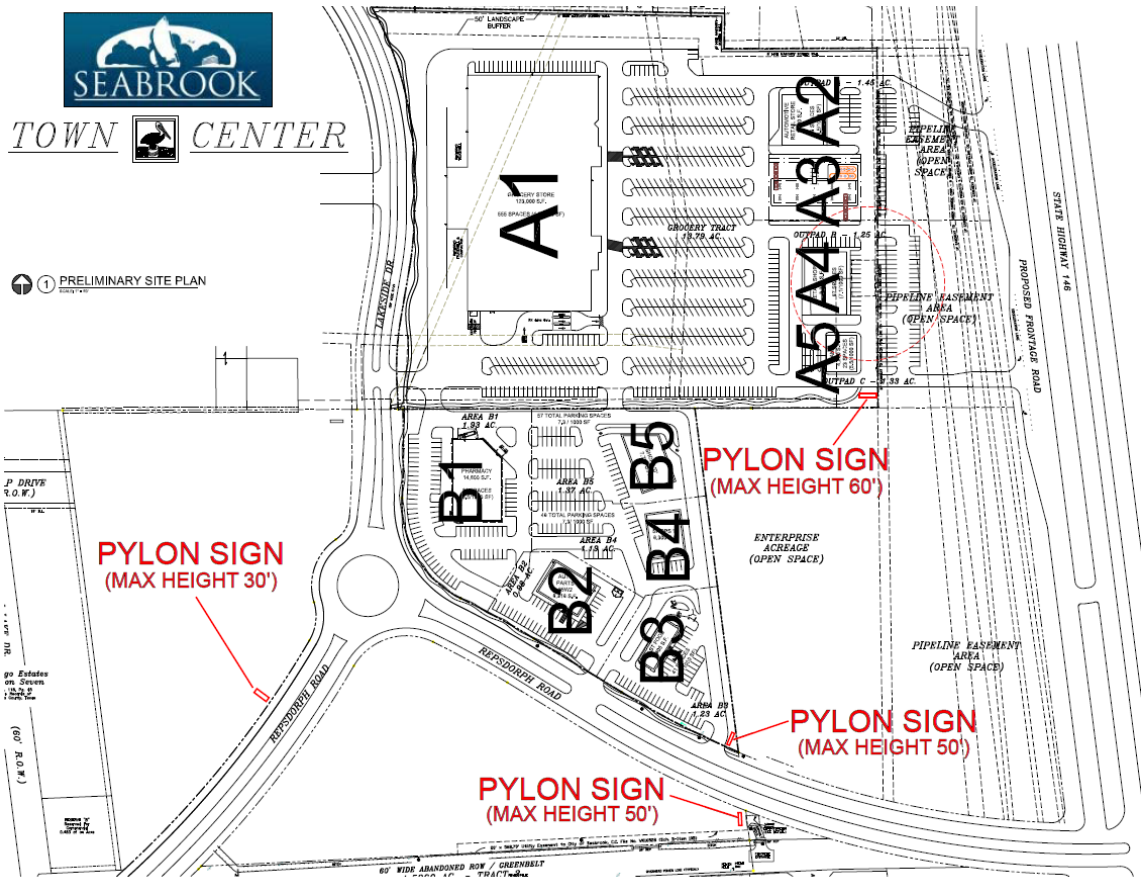

3. Multi-Tenant, Single Lot signage: One sign of this type will be permitted per applicable Lot. A sign of this type shall have a maximum height of 8’ and maximum width of 6’ including all structure and finishes.

Graphic 4-F

4. Single Tenant, Single Lot signage: One sign of this type will be permitted per applicable Lot. A sign of this type shall have a maximum height of 5’ and maximum width of 4’ including all structure and finishes.

Graphic 4-G

B. Building Signs:

1. Lettering shall not exceed 10’ high and must be in proportion to the building facade area on which they are being placed. Sign Area (created as a rectangle around all lettering and images) cannot exceed 80% of the width of the space being identified multiplied by a factor of 2.

2. Multi-tenant building signs lettering shall not exceed 36” when in a single row of text, and 54” total when in two rows of text (providing a 6” space between the two rows).

3. Signs may be Individual Channel Letters or Wireway mounted, provided the Wireway is bottom justified and colored to match the building facade. Box Signs will not be allowed. Internally lit or back lit signs are allowed. Logos will not be permitted except for nationally recognized businesses.

4. Businesses that have frontage on multiple streets shall be allowed one sign per frontage that they face.

C. Directional Signs: Small directional signs may be used where it helps circulation on site. No directions sign shall exceed 6 square feet in size or 36” tall, and lettering should be no more than 4” tall.

Graphic 4-H

4.16.16. External architectural finishes: Buildings located in the Overlay District must be uniform in materials and general appearance.

A. Acceptable Materials: Building Exterior Finishes, other than fenestrations, shall consist of Stone, Brick, Stucco, EIFS, Metal Panels, Painted Concrete Wall Panels, Painted or Decorative Concrete Block, and Cement Board Rain Screen Systems. A minimum of 18% of each façade shall consist of Brick or Stone. Main Field Colors should consist of earth-tone colors.

B. Specific Colors: When used in the facade of a building, Stone is to be Texas White Limestone in Random Ashlar Pattern, Brick is to be ACME Cinnamon Brown, Standing Seam Metal Roofing shall be Sierra Tan by Berridge Roofing, Aluminum Storefront is to be Clear Anodized, and Painted Concrete Block or Painted Concrete Wall Panels are to have heavy texture.

4.16.17. Supplementary regulations:

A. Dumpster enclosures: All trash and utility areas shall be screened from public view and backyard views with masonry wall and can also be further screened by landscape and other devices. Trash areas and dumpster locations shall be permanently fenced or screened with enclosures per Exhibits 2 thru 4 so that trash container / dumpster shall not be visible from any public street.

1. The enclosures shall be constructed in accordance with Graphic 4-I thru 4-L and kept closed at all times other than at trash pick-up times.

Graphic 4-I
Dumpster Enclosure

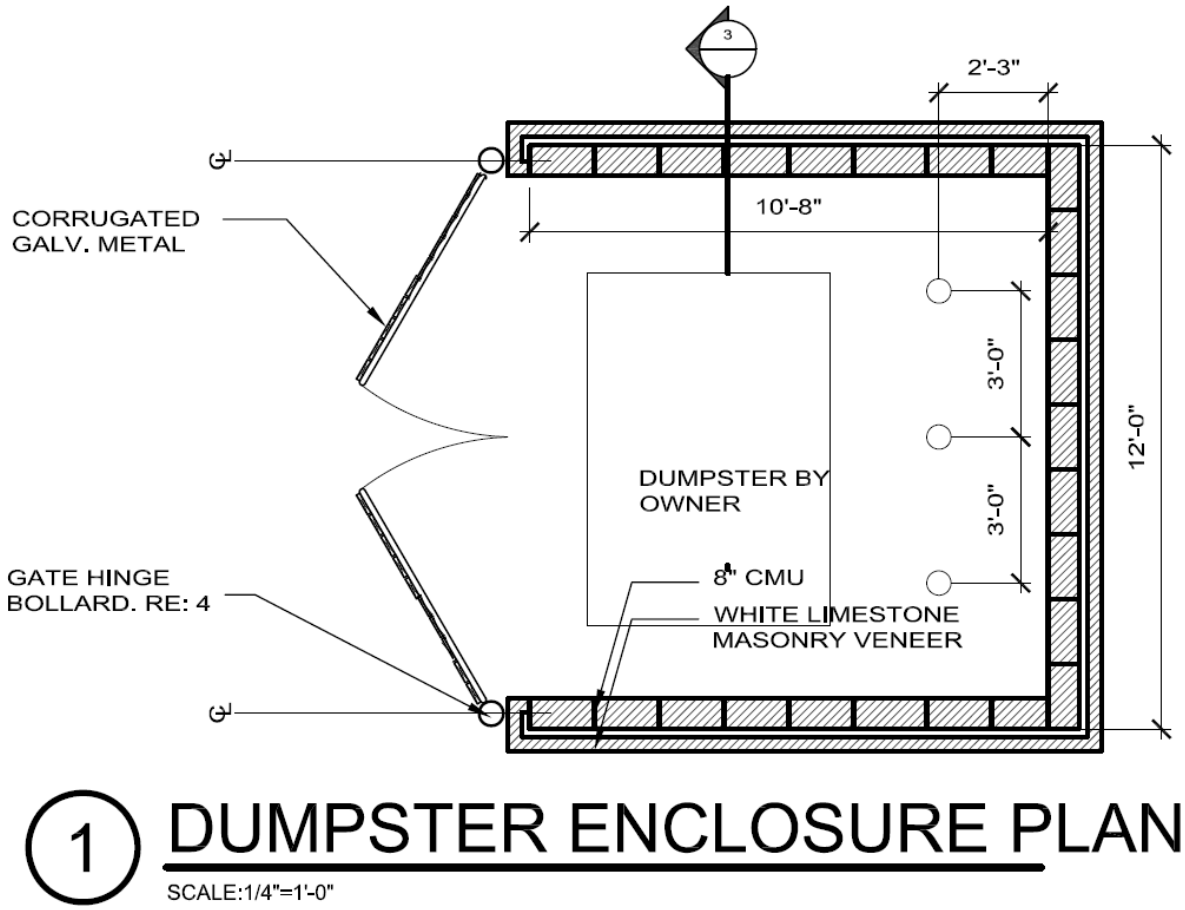

Graphic 4-J
Dumpster Enclosure

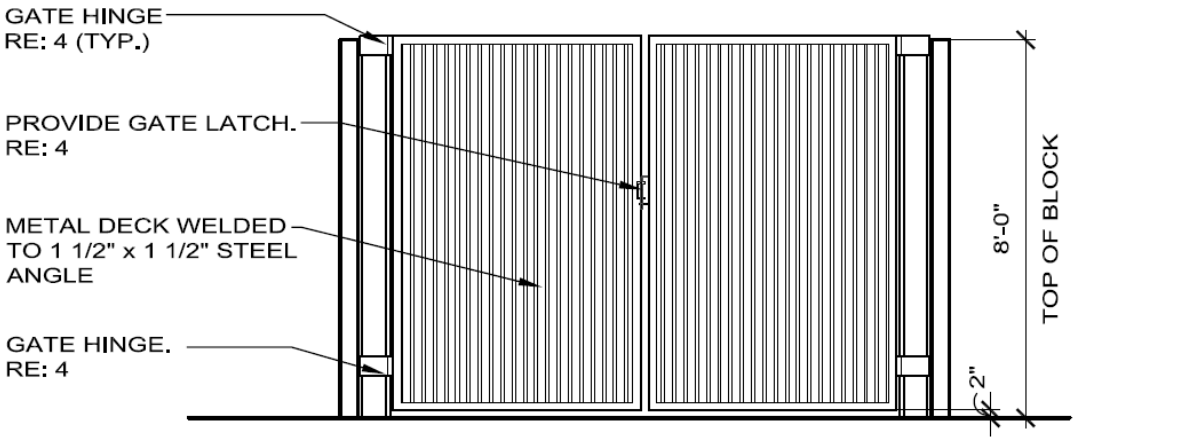

2 DUMPSTER ENCLOSURE PLAN

SCALE:1/4"=1'-0"

Graphic 4-K
Dumpster Enclosure

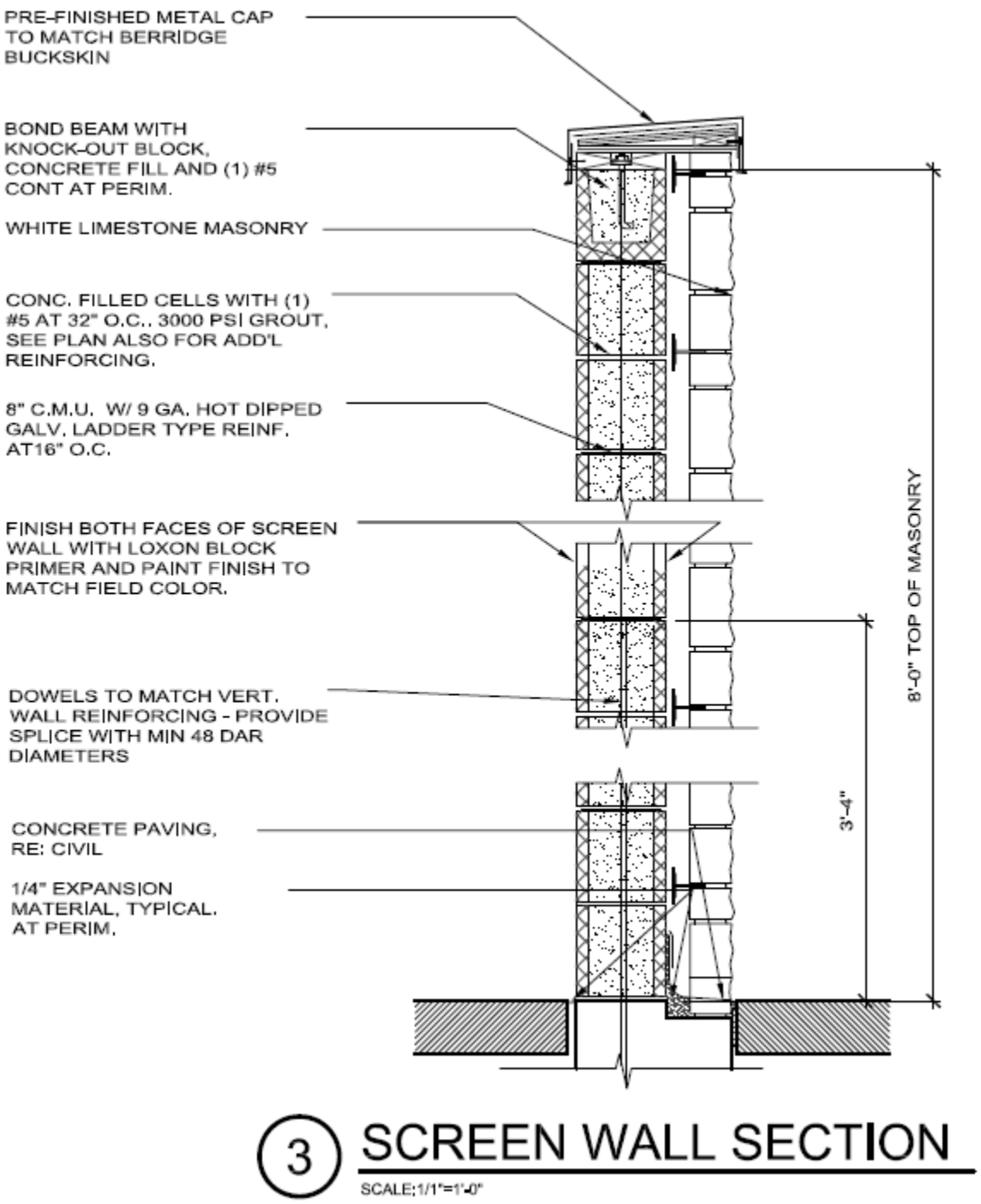

3 SCREEN WALL SECTION

SCALE: 1/1"=1'-0"

Graphic 4-L
Dumpster Enclosure

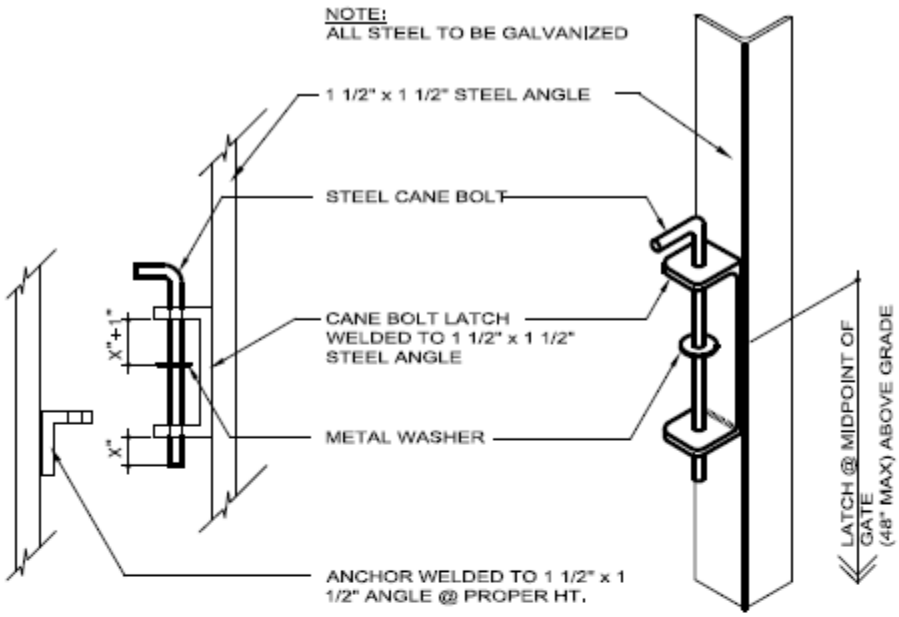

GATE LATCH DETAIL

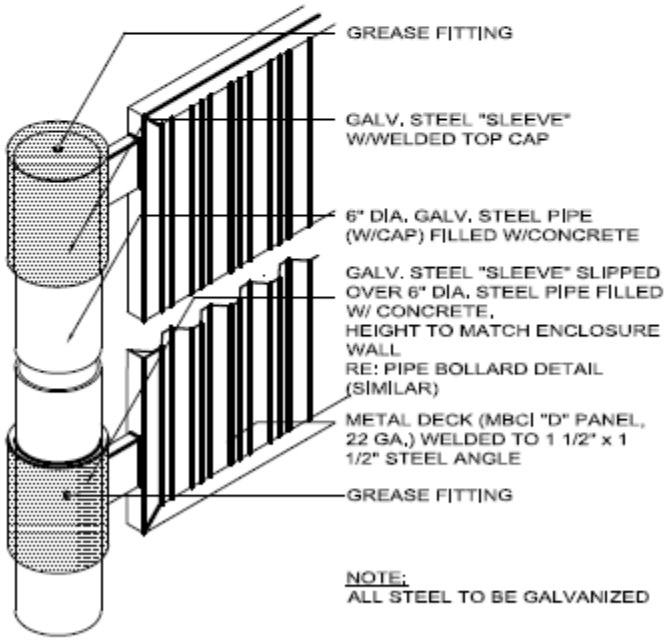

GATE HINGE DETAIL

4 GATE LATCH DETAIL

SCALE: N.T.S.

B. Temporary structures: Structures for uses incidental to construction work on the premises which are removed upon completion or abandonment of construction work are allowed upon permit from the building official.

C. Temporary structures: No structures, including recreational vehicles, construction trailers, or travel trailers may be used for on-site dwelling purposes.

Sec. 3.15 Comprehensive land use regulation matrix.

Attachment B.

TABLE 3-A

Uses Permitted by Right and Conditional Uses [1]

X = Use by right. **C = Conditional use permit required.** **PUD = Planned unit development.** *** = Active sales office required.**

Land Use Activity	R-LD	R-1	R-2	R-3	C-1	C-2	C-3	C-S	WAD	MMU	POD[2]	STCOD[3]	OS	MH	LI
Residential Uses															
Apartments				X											
Assisted Living Facilities				X	C	C									
Cluster housing			X	X									X		
Condominium				X					C	C					
Duplex				X									X		
Group homes	X	X	X	X											
Manufactured home / manufactured home park														X	
Single-family detached residence	X	X	X	X									X	X	
Townhouse				X						C					
Zero lot line homes			X	X											
Non-Residential Uses															
Accessory building/uses (all uses must be allowed per the zone)	X	X	X	X	X	X	X	X	X	X	X	X	X	X	X
Alterations, clothing					X	X	X	X	X	X		X	X		X
Ambulance service						X	X	X							X
Animal training schools						X	X	X							X
Appliance dealers / rental						X	X	X	X	X		X	X		X
Auction house						C	X						X		X
Auto body repair / painting							X								X
Auto dealers							X								X
Auto repair/detailing						X	X	X							X
Auto rental & leasing						X	X	X	C	C					X
Auto wrecker service							X								X
Bakers, wholesale							X								X
Banks or financial services					X	X	X	X	X	C		X	C		X
Banquet hall					C	X	X	X	X	C			C		
Barbers / beauty salons /day spa					X	X	X	X	X	X	X	X	X		X
Bars						C	C		C	C	C	C			C
Bed & breakfast				C	X	X	X	X	X	X	X		X		X
Bingo parlor						C	C		C	C					C
Boat engine repair & service						C	X	X	C	X					X
Boat hull repair & construction						C	X	C	C	X					X
Boat rental								X	X	X	X		X		X
Boat sales						C	X	X	X	X			C*		X
Bowling alleys						C	X			C					X

Land Use Activity	R-LD	R-1	R-2	R-3	C-1	C-2	C-3	C-S	WAD	MMU	POD[2]	STCOD[3]	OS	MH	LI
Cabinet makers & millwork shops					X	X	X	X	C	X			X		X
Candy & confection, wholesale							X					X			X
Caterers					X	X	X	X	X	X			X		X
Cellular communications tower							C								X
Cemetery or mausoleum	C	C	C	C	C	C	C								X
Charter boat-service					C				X	X	X				
Child day care center					C	X	X					X	X		X
Child day care family home				C	C								X		
Church / place of worship	X	X	X	X	X	X	X	X	X	X	X	X	X	X	X
Cigar lounge						X	X	X	X	X	X	X			X
Cigar & tobacco shop						X	X	X	X	X	X	X			X
Civic club						C	C	C	C	C			C		C
Commercial automobile parking lot / garage						C	X				X				X
Computer sales & service					X	X	X	X	X	X		X	X		X
Contractors (with outside storage)							X			C			C		X
Contractors (without outside storage)						X	X			X			X		X
Convenience stores (without fuel pumps)					C	X	X	X	X	X		X	X		X
Copy & duplicating services					X	X	X	X	X	X		X	X		X
Dancehalls						C	C		C	C	C				X
Dance instruction					X	X	X	X	X	X		X	X		X
Delivery services						X	X	X		X	X				X
Dinner theatre						X	X		X	X		X	X		X
Domestic animal training schools						X	X	X							X
Dry cleaners (pickup only)					X	X	X	X	X	X		X	X		X
Electrical equipment & supplies, wholesale						C	X								X
Electronics manufacturer															X
Exterminators & pest control						X	X	X							X
Farm	X														X
Fish & seafood, retail					C	X	X	X	X	X	X		C		X
Fish & seafood, wholesale						C	X		X	X					X
Fraternal organizations						C	C		C						C
Funeral home / mortuary					C	X	X								X
Game rooms & billiard parlors						C	C		C	C	C	C			C
Gasoline service stations / convenience stores						X	X					X			X
Glass sales, tinting & replacement						X	X	X							X
Golf course/country club	C	C	X	X											X
Greenhouse						X	X								X
Gunsmiths						X	X	X	X	X			X		X
Health club					C	X	X		X	X		X	C		X
Heavy machinery sales							X								X
High rise (all uses within must be allowed per the zone)									X	C	C		C		

Land Use Activity	R-LD	R-1	R-2	R-3	C-1	C-2	C-3	C-S	WAD	MMU	POD[2]	STCOD[3]	OS	MH	LI
Hospice	C					X	X								X
Hospital						X	X								X
Hotels & motels (with full service restaurant)						X	X		X	X	X				X
Hotels & motels (without full service restaurant)						C	C		C	C	C				C
Janitorial services & supplies						X	X	X				X			X
Kennel, outdoor							X								X
Laundry, self-service						X	X	X	C	C		X			X
Limousine service					X	X	X	X	C						X
Machine shops & welding							X	X							X
Mailbox rentals					X	X	X	X	C	X		X	X		X
Mailing service , bulk					X	X	X	X	X	X			X		X
Manufacturing															X
Marina									X	X	X		C		
Medical emergency clinics (w/ambulance)										X		X			X
Medical equipment and supplies						X	X	X		X		X			X
Medical laboratories					C	X	X	X							X
Monastery or convent	C			C		C	C								C
Motion picture theatre						X	X		C			X			X
Motorcycle sales & repair						C	X	X							X
Museums					C	C	X		X	X	X		X		X
Nurseries					X	X	X	X					X		X
Nursing homes	C			X	C	C									X
Office, professional					X	X	X	X	X	X	X	X	X		X
Open air market (all uses must be allowed per the zone)													C		
Pawnbrokers						X	X	X							X
Personal care home (assisted living)				X	X	X	X						C		X
Pet shops (Indoor kennels only)					X	X	X	X	X	X		X	X		X
Printers							X	X							X
Private clubs (as per TABC)						C	C		C	C	C				C
Private schools					X	X	X			X			X		X
Public use (governmental)	X	X	X	X	X	X	X	X	X	X	X	X	X	X	X
Pumps, industrial sales and service							X								X
Quick lube/oil change						X	X	X				X			X
Radio/television transmission tower (commercial)										C					X
Recreational vehicle park															C
Recreational vehicle sales, rental & repair							X								X
Recycling center															C
Rental service store (no heavy equipment)						X	X	X							X
Rental, trucks & heavy equipment							X								X
Restaurant equipment & supplies						X	X	X							X
Restaurants					C	X	X	X	X	X	X	X	X		X

Land Use Activity	R-LD	R-1	R-2	R-3	C-1	C-2	C-3	C-S	WAD	MMU	POD[2]	STCOD[3]	OS	MH	LI
Retail, heavy						X	X	X	X	X		X			X
Retail, light					X	X	X	X	X	X	X	X	X		X
Sailmakers					X	X	X	X	X	X			X		X
Sexually oriented business															X
Shipyard									X	X					X
Signs, manufacturing							X	X							
Skating rinks						C	X			X					X
Small engine repair						X	X	X							X
Smoke & head shop							X								X
Sports and recreational arenas										C					X
Stables	C														X
Storage, auto; inside							X								X
Storage, auto; outside							C								
Storage, boat; inside							X	X	X	X					X
Storage, boat; outside							X			X					X
Swimming pool & spa sales & supplies					C	X	X	X	C			X			X
Tele-video production						X	X	X	X	X					X
Theatre					C	X	X		X	X	X	X			X
Tire dealers and service						X	X	X							X
Trucking company															X
Upholstery shop					C	X	X	X	X	X			X		X
Veterinarians & animal hospitals (no outside kennels)					C	X	X	X	X	X		X			X
Veterinarians (with outside kennels)							X								X
Warehouse															X
Warehouses, offices & mini							X			X					X
Woodwork shops						X	X	X	X	X			X		X
Yacht/sailing club									X	X			X		

[1] **A property is prohibited from having an accessory use/structure without the presence of a principal use/structure.**

[2] **Please reference Seabrook Code of Ordinances, Appendix A, Comprehensive Zoning, Section 4.15. The Point Overlay District Regulations, 4.15.04. Uses.**

[3] **Please reference Seabrook Code of Ordinances, Appendix A, Comprehensive Zoning, Section 4.16. Seabrook Town Center Overlay District Regulations, 4.16.04. Uses.**

ACTION ITEM CHECK LIST STATUS

#		STATUS	DATE ASSIGNED	NEXT REVIEW DATE	PROPOSED CLOSURE DATE	RESPONSIBLE ORGANIZATION	City Council RESPONSIBILITY	PLANNING OBJECTIVE #	AGENDA ITEM NUMBER	DESCRIPTION OF ACTION ITEM	STATUS AND DATE
23		OPEN/IN WORK	11/4/2014			Mayor/ City Mgr.			5.1	Provide periodic updates on TxDOT's progress to improve/widen SH 146.	
30		OPEN/IN WORK	11/18/2014			Staff			4.2	Provide periodic updates of Strategic Plan	
32		OPEN/IN WORK	2/17/2015			Staff			6.1	Provide periodic project updates	

June 2016

Sun	Mon	Tue	Wed	Thu	Fri	Sat
			1	*2* **Open Space & Trails 5:00pm**	*3*	*4*
5	*6*	**7 Pelican Bay Opening** **Special Council meeting 6:00pm** **Regular Council meeting 7:00pm**	*8*	*9* **EDC 7:00pm**	*10*	*11*
12	*13*	*14* **Swim Lessons First Session**	*15*	*16* **P&Z 7:00pm**	*17*	*18*
19 **Father's Day**	*20*	*21* **Special Council Meeting 6:00pm** **Regular Council Meeting 7:00pm**	*22* **Texas Outlaw Challenge**	*23* **Texas Outlaw Challenge**	*24* **Texas Outlaw Challenge**	*25* **Texas Outlaw Challenge**
26 **Texas Outlaw Challenge**	*27* **Joint meeting on Comprehensive Master Plan 7:00pm**	*28*	*29*	*30*		

July 2016

Sun	Mon	Tue	Wed	Thu	Fri	Sat
					1	*2*
3	**4** **4th of July Kids' Parade** **City Offices Closed**	*5* **Regular Council Meeting 7:00pm**	*6*	*7* **Open Space & Trails 5:00pm**	*8*	*9*
10	*11* **Budget review meeting 6:00pm**	*12* **Swim Lessons Second Session** **Budget review meeting, if needed 6:00pm**	*13* **Budget review meeting, if needed 6:00pm**	*14* **EDC 7:00pm**	*15*	*16* **Swim n Movie night—Goonies**
17	*18*	*19* **Regular Council Meeting 7:00pm**	*20*	*21* **P&Z 7:00pm**	*22*	*23*
24	*25*	*26*	*27*	*28*	*29*	*30*
31						