SEABROOK CITY COUNCIL
NOTICE OF REGULAR CITY COUNCIL MEETING
TUESDAY, JULY 5, 2016 - 7:00 PM

NOTICE IS HEREBY GIVEN THAT THE SEABROOK CITY COUNCIL WILL MEET ON **TUESDAY JULY 5, 2016 AT 7:00 PM** IN THE CITY HALL CITY COUNCIL CHAMBERS, 1700 FIRST STREET, SEABROOK, TEXAS, **TO DISCUSS, CONSIDER, AND IF APPROPRIATE, TAKE ACTION** WITH RESPECT TO THE ITEMS LISTED BELOW.

THIS FACILITY IS WHEELCHAIR ACCESSIBLE AND ACCESSIBLE PARKING SPACES ARE AVAILABLE. REQUESTS FOR OTHER ACCOMMODATIONS OR INTERPRETIVE SERVICES, MUST BE MADE, 48 HOURS PRIOR TO THIS MEETING. PLEASE CONTACT THE CITY SECRETARY'S OFFICE AT (281) 291-5600 OR FAX (281) 291-5710 FOR FURTHER INFORMATION.

PLEDGE OF ALLEGIANCE

1. PRESENTATIONS

1.1. Presentation of a Proclamation recognizing and honoring the 100,000th orbit of the International Space Station. (Royal)

1.2. Presentation of the proposed Budget FY 2016-2017. (Cook)

2. PUBLIC COMMENTS AND ANNOUNCEMENTS

At this time we would like to listen to any member of the audience on any subject matter, whether or not that item is on the agenda. All comments are limited to a maximum of four minutes for each speaker. In accordance with the Open Meetings Act, members may not discuss or take action on any item that has not been posted on the agenda. When your name is called, please come to the podium and state your name and address clearly into the microphone before making your comments. Thank you.

2.1. Mayor, City Council and/or members of the city staff may make announcements about city/community events. (Council)

3. CONSENT AGENDA

Council will discuss, consider and if appropriate, take action on the items listed below.

3.1. Ordinance 2016-16 Overlay District Amendment

Approve on second reading proposed Ordinance 2016-16, amending the Seabrook City Code, Appendix A, "Comprehensive Zoning", Article 4, "Special Use Regulations", creating a new Section 4.16 "Seabrook Town Center Overlay District Regulations". (Landis)

AN ORDINANCE AMENDING THE SEABROOK CITY CODE, APPENDIX A, COMPREHENSIVE ZONING, ARTICLE 4, "SPECIAL USE REGULATIONS", CREATING A NEW SECTION 4.16 "SEABROOK TOWN CENTER OVERLAY DISTRICT REGULATIONS", SUCH DISTRICT CONSISTING OF THE AREA LYING WEST OF THE WESTERN EDGE OF STATE HIGHWAY 146 RIGHT-OF-WAY, NORTH OF VERMILLION DRIVE REAR PROPERY LINES, EAST OF ED WHITE ELEMENTARY SCHOOL, SOUTH OF OAK DALE WAY REAR PROPERTY LINES, AND SOUTH OF SEABROOK METHODIST CHURCH, AS FURTHER DEPICTED IN ATTACHMENT A, HEREIN, BY ADDING SITE AND ARCHITECTURAL REGULATIONS FOR THE AREA KNOWN COMMONLY AS "SEABROOK TOWN CENTER", AND AMENDING SECTION 3.15, "COMPREHENSIVE LAND USE MATRIX", ACCORDINGLY BY ADDING "SEABROOK TOWN CENTER OVERLAY DISTRICT" "USES" PERMITTED BY RIGHT AND BY CONDITIONAL USE WITHIN SUCH DISTRICT; RECODIFYING THE CURRENT SECTION 4.16 "TELECOMMUNICATION TOWERS AND ANTENNAE" UNDER A NEW SECTION 4.25 UNDER THE SAME TITLE, TO ALLOW FOR FUTURE EXPANSION OF ARTICLE 4; PROVIDING FOR A PENALTY IN AN AMOUNT NOT TO EXCEED $2000 PER OFFENSE FOR VIOLATION OF ANY PROVISION HEREOF BY INCLUSION INTO THE CODE; REPEALING ALL ORDINANCES OR PARTS OF ORDINANCES INCONSISTENT OR IN CONFLICT HEREWITH; AND PROVIDING FOR SEVERABILITY.

Documents: AGENDA BRIEFING FORM - OVERLAY DISTRICT.PDF, REPORT TO CC.PDF, ORD 2016-16 SEABROOK TOWN CENTER OVERLAY DISTRIC.PDF, ATTACHMENT A 063016.PDF, ATTACHMENT B.PDF

4. NEW BUSINESS

Council will discuss, consider and if appropriate, take action on the items listed below.

4.1. Agreement with Loomis for Cash Management Services

Consider approval of contract with Loomis US for Cash Management Services which include armored pick-up and safe vault, beginning July 2016 in an amount of $1,500 for FY 2015/16 and $6,500 for FY 2016/17 and authorize City Manager to execute same. Form 1295 has been submitted and verified. (Gibbs)

Documents: LOOMIS AGENDA BRIEFING FORM_FILLABLE.PDF, CERTIFICATE OF INTERESTED PARTIES-LOOMIS.PDF, LOOMIS CONTRACT.PDF

4.2. Remote Bank Deposit

Consider approval for an additional agreement to the Wells Fargo Bank contract which will provide the software for daily remote bank deposits, a security measure which coordinates with the Loomis service agreement. The increased cost will be partially offset by lower bank fees and will not exceed $3,000. (Gibbs)

5. OLD BUSINESS

Council will discuss, consider and if appropriate, take action on the items listed below.

5.1. Capital Improvements Projects

Discuss, consider, and if appropriate, take action on the proposed Capital Improvements Projects for Fiscal Year 2016/17, as recommended by consultant, Brad Matlock, Principal, Cobb Fendley & Associates, Inc. (Cook)

Documents: CIP SEABROOK FY 2017-22 FOR CC 7-5-2016 (2).PDF, SEABROOK CIP - PROJECT COSTS BY FISCAL YEAR JULY 2016.PDF

6. EXECUTIVE SESSION

The City Council will now hold a closed executive meeting pursuant to the provisions of the open meetings Act, Charter 551, Government Code, and Vernon's Texas Codes Annotated, in accordance with the authority contained in one or more of the following sections: Section 551.071, Consultation with Attorney; Section 551.072, Real Property; Section 551.073, Deliberation Regarding a Prospective Gift; Section 551.074, Personnel Matters; Section 551.076. Security Devices; and Section 551.087, Economic Development.

6.1. Consultation with Attorney

As provided by Section 551.071 of the Texas Government Code, consult with attorney on legal issues associated with the possible issuance of certificates of obligation, general obligation bonds, or other financing for city infrastructure. (Cook)

6.2. Consultation with Attorney

As provided by Section 551.071 of the Texas Government Code, consult with attorney on legal issues associated with water supply contract. (Cook)

7. OPEN MEETING

Council will reconvene in open session to allow for possible action on any of the agenda items listed above under "Executive Session."

8. ROUTINE BUSINESS

Council will discuss, consider and if appropriate, take action on the items listed below.

8.1. Reports

Reports and announcements concerning items of community interest. No discussion or action will be taken by Council.

Council Liaisons:

a. Bay Area Houston Convention & Visitors Bureau
b. Bay Area Houston Economic Partnership
c. Bay Area Transportation Partnership
d. Clear Lake Emergency Medical Corps
e. Economic Alliance, Port Region
f. Galveston Bay Foundation
g. Hotel Tax Liaison Committee
h. Houston-Galveston Area Council

8.2. Approve the Action Items Checklist which is attached and made a part of this Agenda.

Documents: 041116 ACTION ITEMS CHECKLIST.PDF

8.3. Establish future meeting dates and agenda items

Documents: CALENDARS.PDF

THE CITY COUNCIL RESERVES THE RIGHT TO HEAR ANY OF THE ABOVE DESCRIBED AGENDA ITEMS THAT QUALIFY FOR AN EXECUTIVE SESSION IN AN EXECUTIVE SESSION BY PUBLICLY ANNOUNCING THE APPLICABLE SECTION NUMBER OF THE OPEN MEETINGS ACT, (CHAPTER 551 OF THE TEXAS GOVERNMENT CODE) THAT JUSTIFIES EXECUTIVE SESSION TREATMENT.

I certify that this notice was posted on the bulletin board on or before Friday, July 1, 2016 no later than 5:00 p.m. and that this notice will remain posted until the meeting has ended.

Meredith Brant, TRMC
Assistant City Secretary

CITY OF SEABROOK

AGENDA BRIEFING

Date of Meeting: June 21, 2016

Submitter/Requestor: Sean Landis **Date Submitted:** June 9, 2016

Presenter: Sean Landis

Description/Subject: A request was made by the developer (Pacific Ridge Properties) to amend the Seabrook City Code, Appendix A, "Comprehensive Zoning", Article 4, "Special Use Regulations", by creating a new Section 4.16 "Seabrook Town Center Overlay District Regulations", and to amend Article 3, Section 3.15, "Comprehensive Land Use Matrix", by adding "Seabrook Town Center Overlay District", "Uses", permitted by right and by conditional use.

AN ORDINANCE AMENDING THE SEABROOK CITY CODE, APPENDIX A, COMPREHENSIVE ZONING, ARTICLE 4, "SPECIAL USE REGULATIONS", SECTION 4.16 "SEABROOK TOWN CENTER OVERLAY DISTRICT REGULATIONS", BY ADDING SITE AND ARCHITECTURAL REGULATIONS FOR THE AREA KNOWN COMMONLY AS "SEABROOK TOWN CENTER", AND AMENDING SECTION 3.15, "COMPREHESIVE LAND USE MATRIX", ACORDINGLY BY ADDING "SEABROOK TOWN CENTER OVERLAY DISTRICT" "USES" PERMITTED BY RIGHT AND BY CONDITIONAL USE WITHIN SUCH DISTRICT. FOR THE PURPOSES OF THIS ORDINANCE "SEABROOK TOWN CENTER" SHALL CONSIST OF THE AREA LYING WEST OF THE WESTERN EDGE OF STATE HIGHWAY 146 RIGHT-OF-WAY, NORTH OF VERMILLION DRIVE REAR PROPERTY LINES, EAST OF ED WHITE ELEMENTARY SCHOOL, SOUTH OF OAK DALE WAY REAR PROPERTY LINES, AND SOUTH OF SEABROOK METHODIST CHURCH, PROVIDING FOR A PENALTY IN AN AMOUNT NOT TO EXCEED $2000 PER OFFENSE FOR VIOLATION OF ANY PROVISION HEREOF BY INCLUSION INTO THE CODE; REPEALING ALL ORDINANCES OR PARTS OF ORDINANCES INCONSISTENT OR IN CONFLICT HEREWITH; AND PROVIDING FOR SEVERABILITY.

Name of Applicant (if applicable) : Pacific Ridge Properties

Legal Description (if applicable): A map of the proposed district is located within the attached Overlay District Ordinance Language.

Purpose/Need: Policy Issue

Background/Issue (What prompted this need?)**:** At the request of the Seabrook Town Center developer (Pacific Ridge Properties) text was drafted to create an "Overlay District". The Seabrook Town Center Commercial Development Overlay District ("STCOD") is intended to create rules that promote an attractive mixed-use retail

commercial development exhibiting an overall desirable appearance with enduring quality. The overlay will provide direction to the tenant/owner/developer by defining certain design elements and areas which should be common to the project and will unify its overall design.

Impacted Parties (Expected/Notified)**:** Surrounding properties located within 500'

Miscellaneous Comments: N/A

Recommended Action: The Planning and Zoning Commission at their regular scheduled meeting held on May 19th, 2016, considered an amendment to the Seabrook City Code, Appendix A, “Comprehensive Zoning”, Article 4, “Special Use Regulations”, by creating a new Section 4.16 “Seabrook Town Center Overlay District Regulations", and to amend Article 3, Section 3.15, "Comprehensive Land Use Matrix", by adding "Seabrook Town Center Overlay District", "Uses", permitted by right and by conditional use.

The Commission after hearing testimony from City Staff along with the General Public voted to recommend approval of the “Overlay District” as presented by city staff. The vote was six to approve with one abstaining vote.

Ayes: Miller, DeHart, Caradec, Hammann, Potts, and Sharpe
Nays:
Abstained: Davis

Attachments:
(1.)Copy of Proposed Seabrook Town Center Overlay District Ordinance Language.
(2.)Copy of Proposed Changes to the Zoning Land-Use Matrix.

Fiscal Impact:

Finance Officer Review	☐ Yes	☒ No
Budgeted	☐ Yes	☒ No
Budget Amendment Required	☐ Yes	☒ No

Budget Dept/Line Item Number: N/A
Future/Ongoing Impact: N/A

Funding Comments: N/A

Where on the agenda should this item be placed? Specific Public Hearing

Suggested Motion:

(All items are to be reviewed and approved by the city manager, except items submitted by the mayor or any council member or routine consent agenda items such as minutes and second & third readings of ordinances.)

All requests must be submitted to the City Secretary's Office no later than 12:00 p.m. on the Monday, one week prior to the regular Tuesday Council Meeting. All required attachments are to be submitted with the request. Incomplete items cannot be placed on the agenda.

Sent to City Attorney for review on

Approved by City Attorney on
(City Attorney should review all ordinances, resolutions, contracts and executive session items.)

All requests must be submitted to the City Secretary's Office no later than 12:00 p.m. on the Monday, one week prior to the regular Tuesday Council Meeting. All required attachments are to be submitted with the request. Incomplete items cannot be placed on the agenda.

Planning & Zoning Commission
OFFICIAL REPORT

The Planning and Zoning Commission of the City of Seabrook met on May 19, 2016 to hold a meeting to consider:

Request for an amendment to the Seabrook City Code, Appendix A, "Comprehensive Zoning", Article 4, "Special Use Regulations", Section 4.16 "Seabrook Town Center Overlay District Regulations".

THE PLANNING & ZONING COMMISSION MADE THE FOLLOWING RECOMMENDATION:

APPROVAL ■ **APPROVAL WITH AMENDMENTS/CONDITIONS (SEE BELOW)** □ **DENIAL** □
by a concurring vote of a majority of members of the Planning and Zoning Commission present at the meeting on May 19, 2016, as designated below and as certified by the signature of the Chairman. **This document is not valid unless signed by the Chairman/Presiding Commissioner.**

VOTE:	AYE	NAY	ABSTAINED	ABSENT	INITIAL
Rosebud Caradec	RC				RC
Laura Davis			LD		LD
Mike DeHart	MD				MD
Buddy Hammann					
Dodie Miller	DM				DM
Michael Potts	MP				MP
Michael Sharpe	MDS				MDS

Michael Potts
Michael Potts, Chairman
Planning & Zoning Commission

ATTEST:
Alesia L. Hammock
Alesia L. Hammock
Secretary

CITY OF SEABROOK
ORDINANCE NO. 2016-16

AN ORDINANCE AMENDING THE SEABROOK CITY CODE, APPENDIX A, COMPREHENSIVE ZONING, ARTICLE 4, "SPECIAL USE REGULATIONS", CREATING A NEW SECTION 4.16 "SEABROOK TOWN CENTER OVERLAY DISTRICT REGULATIONS", SUCH DISTRICT CONSISTING OF THE AREA LYING WEST OF THE WESTERN EDGE OF STATE HIGHWAY 146 RIGHT-OF-WAY, NORTH OF VERMILLION DRIVE REAR PROPERTY LINES, EAST OF ED WHITE ELEMENTARY SCHOOL, SOUTH OF OAK DALE WAY REAR PROPERTY LINES, AND SOUTH OF SEABROOK METHODIST CHURCH, AS FURTHER DEPICTED IN ATTACHMENT A, HEREIN, BY ADDING SITE AND ARCHITECTURAL REGULATIONS FOR THE AREA KNOWN COMMONLY AS "SEABROOK TOWN CENTER", AND AMENDING SECTION 3.15, "COMPREHESIVE LAND USE MATRIX", ACORDINGLY BY ADDING "SEABROOK TOWN CENTER OVERLAY DISTRICT" "USES" PERMITTED BY RIGHT AND BY CONDITIONAL USE WITHIN SUCH DISTRICT; RECODIFIYING THE CURRENT SECTION 4.16 "TELECOMMUNICATION TOWERS AND ANTENNAE" UNDER A NEW SECTION 4.25 UNDER THE SAME TITLE, TO ALLOW FOR FUTURE EXPANSION OF ARTICLE 4; PROVIDING FOR A PENALTY IN AN AMOUNT NOT TO EXCEED $2000 PER OFFENSE FOR VIOLATION OF ANY PROVISION HEREOF BY INCLUSION INTO THE CODE; REPEALING ALL ORDINANCES OR PARTS OF ORDINANCES INCONSISTENT OR IN CONFLICT HEREWITH; AND PROVIDING FOR SEVERABILITY.

WHEREAS, the City Council of the City of Seabrook is continually reviewing the provisions of the City Code of Ordinances relating to land use and other circumstances which generally impact the health, safety and well-being of residents, citizens and inhabitants; and

WHEREAS, the Planning and Zoning Commission, in cooperation with the property owners, have studied, reviewed and prepared special use regulations for consideration by City Council to address the uniform development in relation to uses for property within the area lying west of the western edge of State Highway 146 right-of-way, north of the Vermillion Drive rear property lines, east of Ed White Elementary School, south of Oak Dale Way rear property lines, and south of Seabrook Methodist Church as shown in Attachment A, which is made a part of this Ordinance, (the "Tract'); and

WHEREAS, all public notices have been published, mailed and provided in accordance with statute and the City Code of Ordinances, Appendix A of the City Code of Ordinances (Zoning Code); and

WHEREAS, the Planning and Zoning Commission recommended approval of this zoning change for the Tract, commensurate with the addition of site, architectural and related design standards and uses at its meeting of May 19, 2016, and has made its final report; and

WHEREAS, the City Council and the Planning and Zoning Commission of the City of Seabrook have studied the present provisions of the Code of Ordinances of the City of Seabrook and have determined the need to update the provisions relative to special uses of Tract for reference in the land use matrix; and

WHEREAS, the City Council now desires to recodify the current Section 4.16 entitled "Telecommunication Towers and Antennae" under a new Section 4.25 under the same title, to allow for future expansion of Article 4, "Special Use Regulations"; and

WHEREAS, all public notices have been posted, published and all required hearings on this matter have been held in accordance with the Comprehensive Zoning Ordinance and law; now, therefore,

BE IT ORDAINED BY THE COUNCIL OF THE CITY OF SEABROOK, STATE OF TEXAS:

SECTION 1. FINDINGS OF FACT.

That the facts and matters set forth in the preamble of this Ordinance are hereby found to be true and correct.

SECTION 2. AMENDMENT TO THE SEABROOK CITY CODE, APPENDIX A, ARTICLE 4, SECTION 4.16.

The Code of Ordinances of the City of Seabrook, Appendix A, "Comprehensive Zoning", Article 4, "Special Use Regulation", is hereby amended by creating a new Section 4.16 entitled "The Seabrook Town Center Overlay District Regulations" to establish design regulations, including site, architectural and related design standards and regulations for developments within the area lying west of the western edge of State Highway 146 right-of-way, north of the Vermillion Drive rear property lines, east of Ed White Elementary School, south of Oak Dale Way rear property lines, and south of Seabrook Methodist Church as shown in Attachment A, (the "Tract"), which is made a part of this Ordinance.

The Tract to be rezoned is shown in Attachment A, Section 4.16 which is incorporated herein by reference.

Upon passage of this Ordinance, the official zoning map of the City of Seabrook shall be amended to reflect this change.

<u>SECTION 3.</u> AMENDMENT TO THE SEABROOK CITY CODE, APPENDIX A, ARTICLE 3, SECTION 3.15.

The Code of Ordinances of the City of Seabrook, Appendix A, "Comprehensive Zoning", Article 3, "Establishment of Zoning Districts and Associated Regulations", Section 3.15 "Comprehensive Land Use Matrix", is hereby amended by adding "Seabrook Town Center Overlay District (STCOD)", "Uses", permitted by right and by conditional use within such district as shown in Attachment B, which is made part of this Ordinance.

<u>SECTION 4</u>. AMENDMENT TO THE SEABROOK CITY CODE TO RECODIFY THE CURRENT SECTION 4.16, UNDER A NEW SECTION 4.25.

The Code of Ordinances of the City of Seabrook, Appendix A, "Comprehensive Zoning", Article 4, "Special Use Regulation", is hereby amended to recodify the prior Section 4.16 entitled "Telecommunication Towers and Antennae" under a new Section 4.25 under the same title, to allow for future expansion of Article 4.

<u>SECTION 5</u>. INCORPORATION INTO THE CODE, PENALTY CLAUSE.

This Ordinance is hereby incorporated and made a part of the Seabrook City Code. Violation of this Ordinance is subject to the penalty section of said Code including, Section 11.06, "Criminal Enforcement" which provides that any person who shall violate any provision of this Ordinance shall be deemed guilty of a misdemeanor and, upon conviction, shall be fined in an amount not to exceed $2,000.00. Each day of violation shall constitute a separate offense.

<u>SECTION 6</u>. REPEAL OF CONFLICTING ORDINANCES.

All ordinances or parts of ordinances in conflict or inconsistent with this Ordinance are hereby expressly repealed.

<u>SECTION 7.</u> SEVERABILITY.

In the event any clause phrase, provision, sentence, or part of this Ordinance or the application of the same to any person or circumstances shall for any reason be adjudged invalid or held unconstitutional by a court of competent jurisdiction, it shall not affect, impair, or invalidate this Ordinance as a whole or any part or provision hereof other than the part declared to be invalid or unconstitutional; and the City Council of the City of Seabrook, Texas, declares that it would have passed each and every part of the same notwithstanding the omission of any such part thus declared to be invalid or unconstitutional, whether there be one or more parts.

<u>SECTION 8</u>. NOTICE.

The City Secretary shall give notice of the enactment of this Ordinance by promptly publishing it or its descriptive caption and penalty after final passage in the official newspaper of the City; the Ordinance to take effect upon publication.

PASSED AND APPROVED on first reading this _____ day of _____, 2016.

PASSED AND APPROVED on second and final reading this _____day of _____, 2016.

BY: _____
Glenn Royal, Mayor

ATTEST:

By: _____
Robin Hicks, TRMC
City Secretary

APPROVED AS TO FORM:

_____
Steven L. Weathered
City Attorney

Attachment A.

Sec. 4.16. The Seabrook town center commercial development overlay district regulations.

4.16.01. Purpose: The Seabrook Town Center Commercial Development Overlay District ("STCOD") is intended to promote an attractive mixed-use retail commercial development exhibiting an overall desirable appearance with enduring quality. The overlay will provide direction to the tenant/owner/developer by defining certain design elements and areas which should be common to the project and will unify its overall design. The standards that follow allow for and promote design integration. The city has conducted extensive study for the purposes of establishing the regulations that follow:

4.16.02. Applicability: All new developments and changes to existing developments in the district that require site plan or building permit approval are subject to the requirements of the overlay district in addition to other applicable regulations in the City's Code of Ordinances. Nothing contained in this section 4.16 shall be deemed to reduce applicable requirements contained in other sections of this Code, or any ordinance specifically applicable to a development (e.g., conditional use permit or planned unit development), but instead to enhance the aesthetics and associated uses of this overlay district.

4.16.03. Boundaries of the overlay district: The Seabrook Town Center Commercial Development overlay district ("STCOD") shall consist of the area lying west of the western edge of (State Highway 146 right-of-way, north of Vermillion Drive rear property lines, east of Loch Lake Drive rear property lines, east of Ed White Elementary School, south of Oak Dale Way rear property lines, and south of Seabrook Methodist Church.

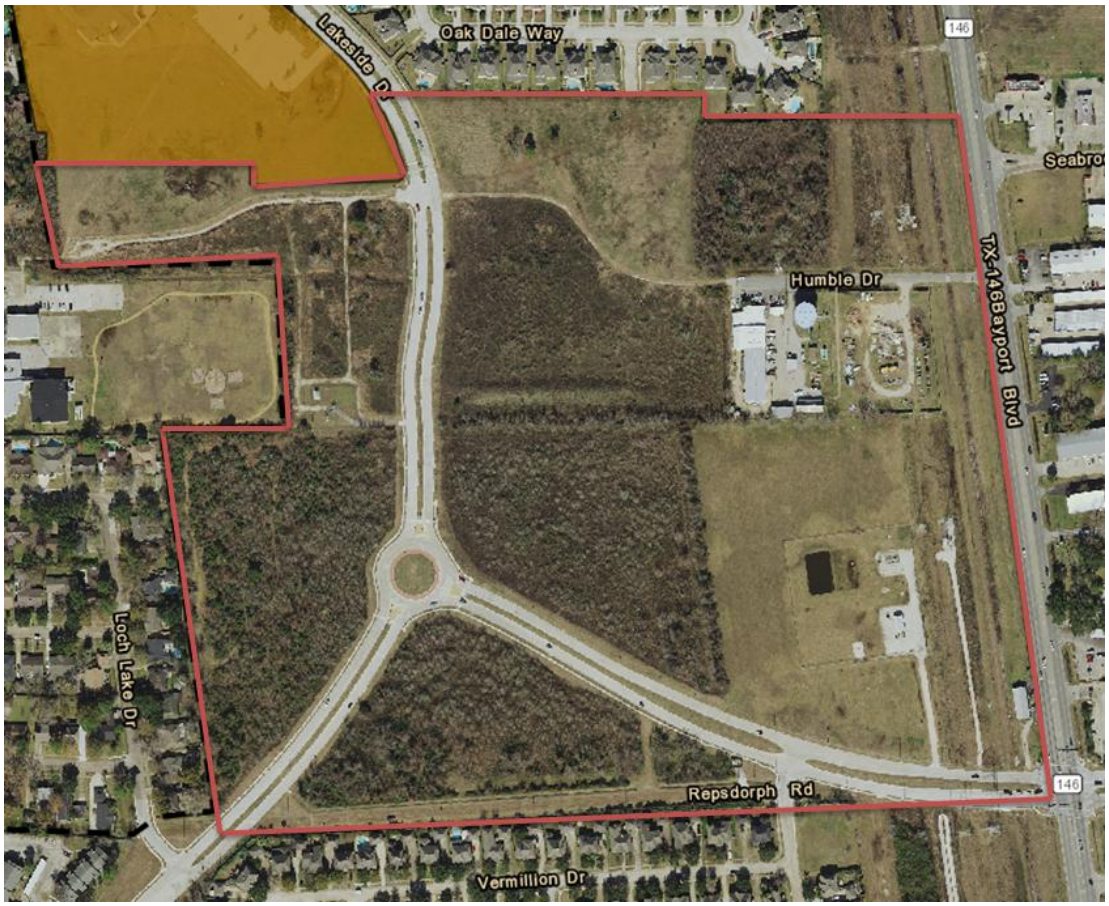

*4.*16.04. *Submission and plan review procedures:*

A. Application submittals*:* A completed building permit application form and three (3) sets of plans printed at a standard architectural sheet size of a minimum of (24”X 36”) along with one electronic copy in PDF format, and include the following:

1. Site Survey.

2. Site improvement details such as building(s), parking lot(s) and or garage, curbing, walks, culvert, fences, water quality elements, screens, and mechanical equipment.

3. Civil plans that include existing and proposed grades and wet/dry utilities with sizes and locations.

4. Building plans and elevations (one copy of a colored elevation is needed). Samples of all exterior building materials to show color, texture, and finish.

5. A separate Landscape Plan(s) showing all vegetation setbacks, existing and proposed plant material, and irrigation to be installed (irrigation should be to shoulder of road within jurisdictional codes, ordinances, etc).

6. Site and exterior building Lighting Plan with Lumens per acre calculations and photo metrics including average light levels achieved.

7. Location and details for all exterior signage whether freestanding or building mounted (Signage Plan).

8. Construction access and staging areas.

4.16.05. Uses: Uses permitted by right and by conditional use shall be governed by Section 3.15, “Comprehensive land use regulation matrix” STCOD District.

4.16.06. Area Regulations:

Street Setback Criteria						
	Landscape & Parking Setbacks			**Building Setbacks**		
	Front	Side**	Rear	Front	Side*	Rear
Streets						
SH 146	20’	5’	5’	40’	40’	10’
Repsdorph	15’	5’	5’	25’	25’	10’
Lakeside	15’	5’	5’	25’	25’	10’

*For Lots where buildings abut each other for a contiguous shopping center, the Building Side Setback can be 0’.

**For Lots where the lot line runs in the middle of a driveway for a contiguous shopping center, the Landscape Setback can be 0'.

	Side Building Setback Requirements			
Land Use	Adjoining Thoroughfare	Adjoining Collector	Adjoining R-1 – R-2 Single Family	Adjoining Commercial
Commercial	25'	25'	50'	Per IBC

	Rear Building Setback Requirements			
Land Use	Rearing Thoroughfare	Rearing Collector	Adjoining R-1 – R-2 Single Family	Adjoining Commercial
Office	10'	10'	50'	10'
Retail	10'	10'	50'	10'

4.16.07. Building height: No building or structure shall have a finished floor whose elevation exceeds 74 feet 11 inches above finished grade. Structures exceeding 50 feet in height shall require a conditional use permit and shall be set back from properties zoned R-1 and R-2 a distance equal to the height of the structure. This setback shall not apply to church steeples, spires, belfries, cupolas, or other normal appurtenances usually required to be placed above the roof level and not intended for human occupancy.

4.16.08. Buffering and screening:

A. Special Landscape Area: (Graphic 4-A delineates the Special Landscape Area boundaries) the area within 50' of contiguous and adjoining R-1 zoned properties located in the Special Landscape Area shall meet the following standards:

1. Pervious, landscaped area

2. No drives or parking

3. No commercial or retail use

4. Irrigated and maintained by the owner thereof in good order, appropriately trimmed and clear of trash/debris.

B. Special Screening /Buffering: Along the Boundary with contiguous and adjoining R-1 zoned properties located in the Special Landscape Area, the following requirement shall apply:

1. 8' masonry wall without openings

2. Trees no shorter than 8’ tall and in a quantity of no less than one tree per four feet of boundary wall shall be planted, maintained, and replaced as required. The lay out shall be approved by the City Planning Director at the time of plan approval for the Project. The trees shall be appropriately irrigated.

C. Special Setbacks for Certain Uses: The following uses must be setback 75’ from the following distances from contiguous and adjoining R-1 zoned properties located in the Special Landscape Area:

1. Loading Docks

2. Trash Dumpsters

3. Open Storage

Graphic 4-A
Special Landscape Area

4.16.09. Outside storage and display: Outside storage, display, and sales is only permitted for Single Tenants that exceed 50,000 SF of Gross Interior Square Footage. Outside Storage must be screened from view from all public streets with the use of screening walls, landscaping, or berms. Outside display and sales areas must be out of traffic circulation areas and maintained at all times to keep the area clean and free of debris and trash.

4.16.10. Parking: Concrete paving on any Lot shall be used for all paving surfaces of sufficient thickness to withstand the anticipated commercial traffic based on sound Geotechnical Engineering recommendations for the Lot. Paint Striping for Fire Lanes shall be per City requirements. Paint Striping for Parking and Traffic Control shall be 4" in width, White Traffic Paint, of the Best Commercial Quality. Pavers are required at all driveway entry points from a Public Right Of Way. Pavers shall be set on recessed 7" paving according to City standards. Pavers to start 15' inside of the Lot and extend to 25' inside the Lot and run the full width of the driveway. Pavers shall be modular concrete pavers, "Holland Stone – Antique Buff" color by Pavestone or approved equivalent. Paver areas shall be framed with 2 Soldier courses and then filled in with a Parquet pattern. Required parking shall be in accordance with Section 5, specifically including Section 5.04, Table 5-C, "Required Parking Spaces by Land Use Category" of Appendix "A" of the Code of Ordinances.

4.16.11. Landscaping: Each Lot shall have to be landscaped in accordance with the following guidelines and include a complete irrigation system. Preservation of healthy and desirable trees is encouraged where reasonable and should be considered in the design and layout of each Lot.

A. Plants shall be selected from Table 4-A "Approved Plant List". These materials have been selected because they are generally native, drought resistant, and non-invasive. These same characteristics should be considered for seasonal color plantings also. Landscaped Islands, Setback Areas, and Green Spaces to include Solid Sod Bermuda Grass where mulched beds are not used.

B. All Plant material shall be sound, healthy specimens typical of their species, free from injurious insects or disease. Plant proportions shall be those recognized as normal for a well grown plant of that species and size, as used by the American Standard for Nursery Stock. Caliper for sizes shall be taken on the trunk 6" to 12" above natural ground.

C. Street Trees and Shrubs: One Tree will be required for every 50' of Street Frontage per Lot to be placed in the Landscape Setback. These trees can be clustered for planting so long as the quantity is met. Street Trees shall be 65 gallon, 3 ½" minimum caliper, and 12'-14' in height at time of planting. (Street Trees and Shrubs will not be required for SH 146 Frontage.) Twenty-five (25) shrubs will be required for each 75' of Street Frontage per Lot to be placed in the Landscape Setback. These shrubs shall be planted at 36" on center. Shrubs shall be minimum 3 gallon size.

D. Planting Islands: Parking rows should have Landscaped Islands on each end of the rows which shall contain one to two trees in each island depending on the reasonable planting and island size. If, at anytime, the required vegetation becomes diseased, deteriorated, or dies, the owner of the premises must replace the vegetation within 30 days of written notice of the city.

Table 4-A
Approved Plant List

APPROVED PLANT LIST

Small Trees	Common Name	Reforestation Species
Bumelia celastrina	Tropical Buckthorn	Yes
Cercis canadensis	Redbud	Yes
Chionanthus virginicus Fringe Tree		
Comus florida	Dogwood	
Diospyros virginiana	Eastern Persimmon	
Hamameys Virginiana	Witch Hazel	
Lagerstroemia indica	Crepe Myrtle	
Malus Spp.	Crabapple	
Pistacia texana	Texas Pistache	Yes
Prunus mexicana Mexican Plum		
Pyrus calleryana bradfordii	Bradford Pear	
Sophora spp.	Mountain Laurel	

Medium & Large Trees

Acer Rubrum "Drummondii"	Swamp Maple	Yes
Betula nigra	River Birch	
Carya illinoinensis	Pecan	
Celtis laevigata	Southern Hackberry	Yes
Fraxinus americana	White Ash	
Fraxinus pennsylvanica	Green Ash	Yes
Juglans nigra	Black Walnut	
Liquidamber styraciflua	Sweetgum	Yes
Liriodendron tulipifera	Tulip Tree	
Magnolia grandiflora	Southern Magnolia	
Ostrya virginiana	American Hop Hornbeam	
Pinus taeda	Loblolly Pine	Yes
Platanus mexicana	Mexican Sycamore	
Platanus occidentalis	American Sycamore	
Quercus falcata	Swamp Red Oak	Yes
Quercus glaucoides	Lacey Oak	
Quercus michauxii	Swamp Chestnut Oak	
Quercus macrocarpa	Bur Oak	Yes
Quercus shumardii	Shumard Oak	
Quercus texana	Red Oak	
Quercus texana nuttall	Nuttall Oak	Yes
Quercus virginiana	Live Oak	
Sabal Texana (Mexicana)	Texas Sabal	
Taxodium distichum	Bald Cypress	Yes
Ulmus crassifolia	Cedar Elm	Yes

Shrubs, Dwarf Shrubs & Plants

Azalea	Azalea	
Abelia grandiflora prostrata	Dwarf Abelia	
Berberis thumbergii	Pigmy Barberry	
Gardenia radicans	Dwarf Gardenia	
Hesperaloe parviflora	Red Yucca	
Ilex Spp.	Holly-Yaupon	
Lantana horrida T	exas Lantana	
Nandina domestica nana	Dwarf Nandina	
Poliomintha longifolia	Mexican oregano	
Penstemon baccharifolius	Red Penstemon	
Pittosporum tobira	Dwarf Pittosporum	
Rosemarinus officinalis	Rosemary	
Salvia leucantha	Mexican Brush Sage	

Small Shrubs & Plants

Abelia Spp.	Abelia	
Anisacanthus wrightii	Hummingbird Bush	
Aucuba japonica	Aucuba	
Buxus Spp.	Boxwood	
Callicarpa americana	American Beauty Berry	Yes
Chaenomeles japonica	Flowering Quince	
Gardenia Spp.	Gardenia	
Hydrangea macrophylla	Hydrangea	
Opuntia compressa	Lowprickly pear cactus	
Malvaviscus drummondii	Turk's Cap	Yes
Opuntia engelmannii texana	Flaming prickly pear cactus	
Opuntia engelmannii linguiformis	Cow's tongue prickly pear cactus	
Opuntia leptocarpa Mackenson	prickly pear cactus	
Pavonia lasiopetala	Rock Rose	
Pistacia texana	Texas Pistachio	Yes
Raphiolepis indica	Indian Hawthorne	
Spiraea prunifolia	Bridal Wreath Spirea	
Yucca pallida	Paleleaf Yucca	
Yucca torreyi	Spanish Bayonet Yucca	

Medium Shrubs & Plants

Azalea indicum Indica	Azalea	
Buddleia Spp.	Butterfly Bush	
Camellia Spp.	Camellia	
Elaeagnus fruitlandi	Silverberry	
Feijoa sellowiana	Pineapple Guava	
Hibiscus coccineus	Texas Star Hibiscus	Yes
Hibiscus syriacus	Althea	
Ilex Spp.	Holly-Yaupon	Yes
Ilex decidua	Possumhaw	Yes
Jasminum Spp.	Jasmine	
Lagerstroemia indica "dwarf"	Dwarf Crepe Myrtle	
Leucophyllum frutescens	Texas Sage	
Lonicera fragrantissima	Winter Honeysuckle	

Malvaviscus drummondii	Turk's Cap	Yes
Crinum americanum	Crinum Lily	
Liriope Spp.	Lily Turf	
Lupinus texensis	Bluebonnet	
Lantana camara	Lantana	
Ophiopogon japonicum	Monkey grass	
Opuntia compressa	Low prickly pear cactus	
Opuntia engelmannii texana	Flaming prickly pear cactus	
Opuntia engelmannii linguiformis	Cow's tongue prickly pear cactus	
Opuntia leptocarpa	Mackenson prickly pear cactus	
Osmunda cinnamomea	Cinnamon Fern	Yes
Osmunda regalis	Royal Fern	Yes
Saururus cernuus	Lizardtail	
Sedum Spp.	Sedum	
Verbena peruviana	Peruvian Verbena	
Vinca minor and major	Vinca	
Woodwardia aereolata	Chain Fern	Yes

Grasses Lawn and Ornamental

Cynodon dactylon	Common Bermuda	
Buchloe dactyloides	Buffalo Grass	
Bouteloua gracilis	Blue Grama	Yes
Bouteloua curtipendula	Sideoats Grama	
Muhlenbergia capillaris	Gulf Muhly	Yes
Muhlenbergia lindheimeri	Lindheimer Muhly	Yes
Schizachyrium scoparium	Little Bluestem	
Stipa tenuissima	Mexican Feather Grass	Yes

4.16.12. Sidewalks: The pedestrian paving will be constructed either within appropriate public street rights-of-ways and/or within the Landscape Setbacks. All walks must be constructed in a consistent workmanlike manner.

A. Minimum construction requires sidewalks to be four inches (4") thick with #3 reinforcement at eighteen inches (18”) on center both ways. Public Sidewalks located within the City or County right-of -way shall be a minimum of five feet wide. No cold joints are permitted. Complete pours between expansion joints are required. Drill dowels into existing concrete curbs and driveways and use expansion joints with slip dowels at connections of existing and new concrete. Dowels are to be stubbed out where sidewalk is to be continued in the future.

B. Sidewalk elevations shall match with the existing manhole and valve box elevations. If adjustments of the height are required, Owner shall notify the Seabrook Public Works Department (24 hours) prior to sidewalk construction. If adjustments must be made, the Owner-builder/site developer will be responsible for such adjustments. Handicap ramps are required at every street and other locations required by **Americans with Disabilities Act of 1990 (ADA)** as amended.

4.16.13. Site lighting:

A. A lighting photometric drawing, as part of the Lighting Plan, shall be submitted depicting the design layout and illustrating a point-by-point foot-candle lighting to achieve a minimum average level of four foot (4') candles with a maximum/minimum uniformity ratio not to exceed (10:1). All office building lighting will achieve a minimum average lighting level of four foot (4') candles. The types, size, and style of the lighting fixtures shall also appear in the form of a schedule to the Lighting Plan.

B. All parking lot pole mounted lighting shall use the "GE Evolve LED lighting fixture with a minimum wattage of three hundred and fifteen (315) watts. Fixtures and poles shall have a powder-coated finish and shall be black color finish. Standards for parking lots shall be a maximum of thirty-nine feet (39') tall, on a 30" diameter, 30" tall concrete base that is painted white to match the traffic marking paint, and shall have a Glare light shield fixture. The arrangement of parking lot and drive way lights should provide adequate light coverage at all parcel entries and exits.

C. Buildings shall be adequately lit at night. Light fixtures shall be attractive, efficient, and shall not create Glare or spillover into adjacent properties. No flood lights shall be mounted on buildings except for wall packs at the rear of the buildings. Where used, the wall packs must be shielded to prevent light trespass onto adjoining properties.

D. Spillover at perimeter property lines shall be 0.00 foot-candles measured along the property line at a height of 30" above grade. Lighting fixtures located across or adjacent to R-1 and R-2 Single Family Residential Districts shall use "House Side Shields" to minimize glare.

E. Exterior lighting must enhance the atmosphere and safety of all public parking areas, walkways and entrances. Lighting shall be low key and placement of fixtures shall coincide with major walkway areas.

F. Choice of light fixtures and poles, other than parking lot light fixtures, must reflect the theme and architecture of the Project. Structure illumination shall be lit with a concealed, stationary-shielded light source.

G. All areas within the Property must be illuminated with area and decorative lighting continuously during operating hours or from dusk until at least 12:00 a.m. Each Owner of a Tract within the Project shall maintain at least one (1) exterior night light. Where multiple parcels/buildings are under one ownership, for the purposes of this exterior night light requirement, each tract shall be considered a separate tract.

H. Provided however, notwithstanding subsections (A) and (B) above, an applicant may present to the planning and zoning commission, on the site plan, specifications which include alternative materials if they meet or exceed the appearance and atmosphere requirements above and appear better suited under the circumstances.

4.16.15. Signage: Signage in the Overlay District shall be uniform in materials and general appearance.

A. Ground Sign Types: Three types of Multi Tenant on premise Ground Sign types will be allowed and must all be permitted through the City.

1. The signage shall be constructed in accordance with Graphic 4-B and 4-H.

Graphic 4-B
60’ Max Height Multi-Tenant Ground Sign.

Graphic 4-C
50’ Max Height Multi-Tenant Ground Sign.

Graphic 4-D

30’ Max Height Multi-Tenant Ground Sign.

2. The signage shall be located in accordance with Graphic 4-E.

Graphic 4-E
Multi-Tenant Ground Sign Location Map.

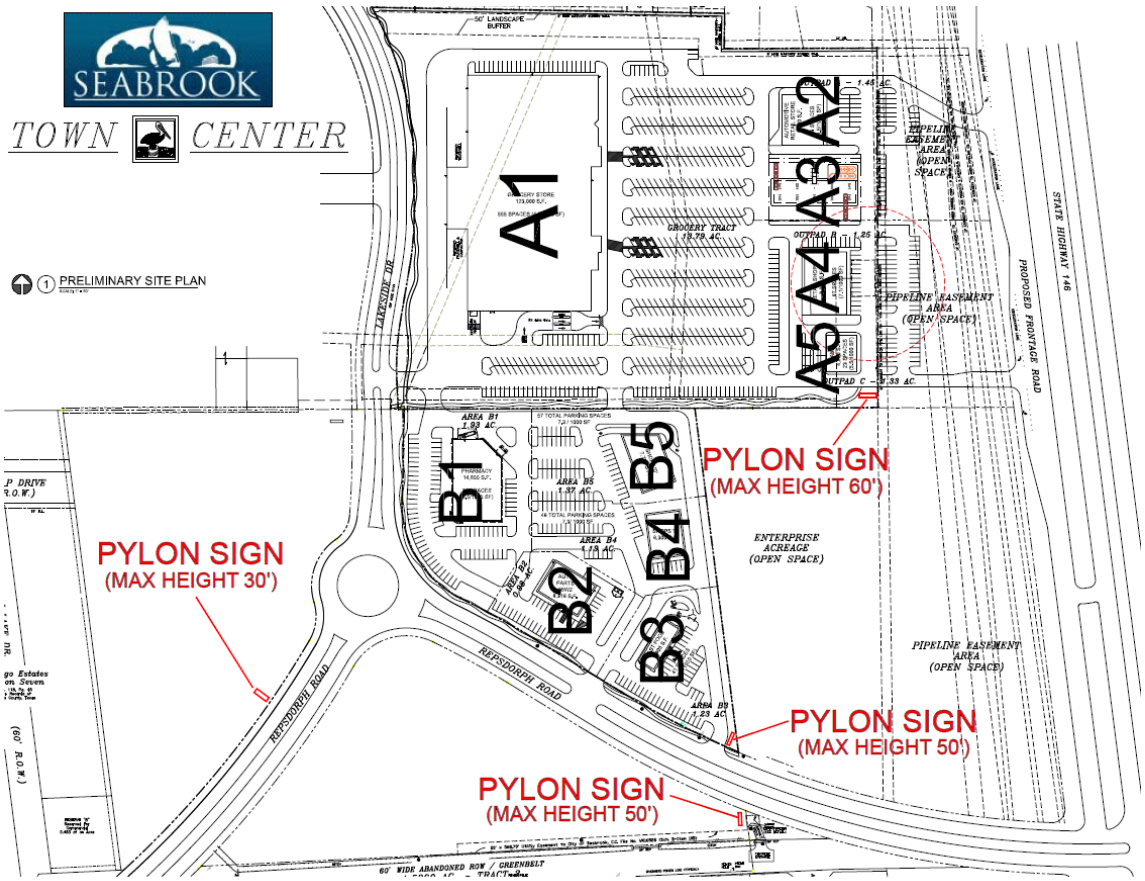

3. Multi-Tenant, Single Lot signage: One sign of this type will be permitted per applicable Lot. A sign of this type shall have a maximum height of 8’ and maximum width of 6’ including all structure and finishes.

Graphic 4-F

4. Single Tenant, Single Lot signage: One sign of this type will be permitted per applicable Lot. A sign of this type shall have a maximum height of 5’ and maximum width of 4’ including all structure and finishes.

Graphic 4-G

B. Building Signs:

1. Lettering shall not exceed 10’ high and must be in proportion to the building facade area on which they are being placed. Sign Area (created as a rectangle around all lettering and images) cannot exceed 80% of the width of the space being identified multiplied by a factor of 2.

2. Multi-tenant building signs lettering shall not exceed 36” when in a single row of text, and 54” total when in two rows of text (providing a 6” space between the two rows).

3. Signs may be Individual Channel Letters or Wireway mounted, provided the Wireway is bottom justified and colored to match the building facade. Box Signs will not be allowed. Internally lit or back lit signs are allowed. Logos will not be permitted except for nationally recognized businesses.

4. Businesses that have frontage on multiple streets shall be allowed one sign per frontage that they face.

C. Directional Signs: Small directional signs may be used where it helps circulation on site. No directions sign shall exceed 6 square feet in size or 36” tall, and lettering should be no more than 4” tall.

Graphic 4-H

4.16.16. External architectural finishes: Buildings located in the Overlay District must be uniform in materials and general appearance.

A. Acceptable Materials: Building Exterior Finishes, other than fenestrations, shall consist of Stone, Brick, Stucco, EIFS, Metal Panels, Painted Concrete Wall Panels, Painted or Decorative Concrete Block, and Cement Board Rain Screen Systems. A minimum of 18% of each façade shall consist of Brick or Stone. Main Field Colors should consist of earth-tone colors.

B. Specific Colors: When used in the facade of a building, Stone is to be Texas White Limestone in Random Ashlar Pattern, Brick is to be ACME Cinnamon Brown, Standing Seam Metal Roofing shall be Sierra Tan by Berridge Roofing, Aluminum Storefront is to be Clear Anodized, and Painted Concrete Block or Painted Concrete Wall Panels are to have heavy texture.

4.16.17. Supplementary regulations:

A. Dumpster enclosures: All trash and utility areas shall be screened from public view and backyard views with masonry wall and can also be further screened by landscape and other devices. Trash areas and dumpster locations shall be permanently fenced or screened with enclosures per Exhibits 2 thru 4 so that trash container / dumpster shall not be visible from any public street.

1. The enclosures shall be constructed in accordance with Graphic 4-I thru 4-L and kept closed at all times other than at trash pick-up times.

Graphic 4-I
Dumpster Enclosure

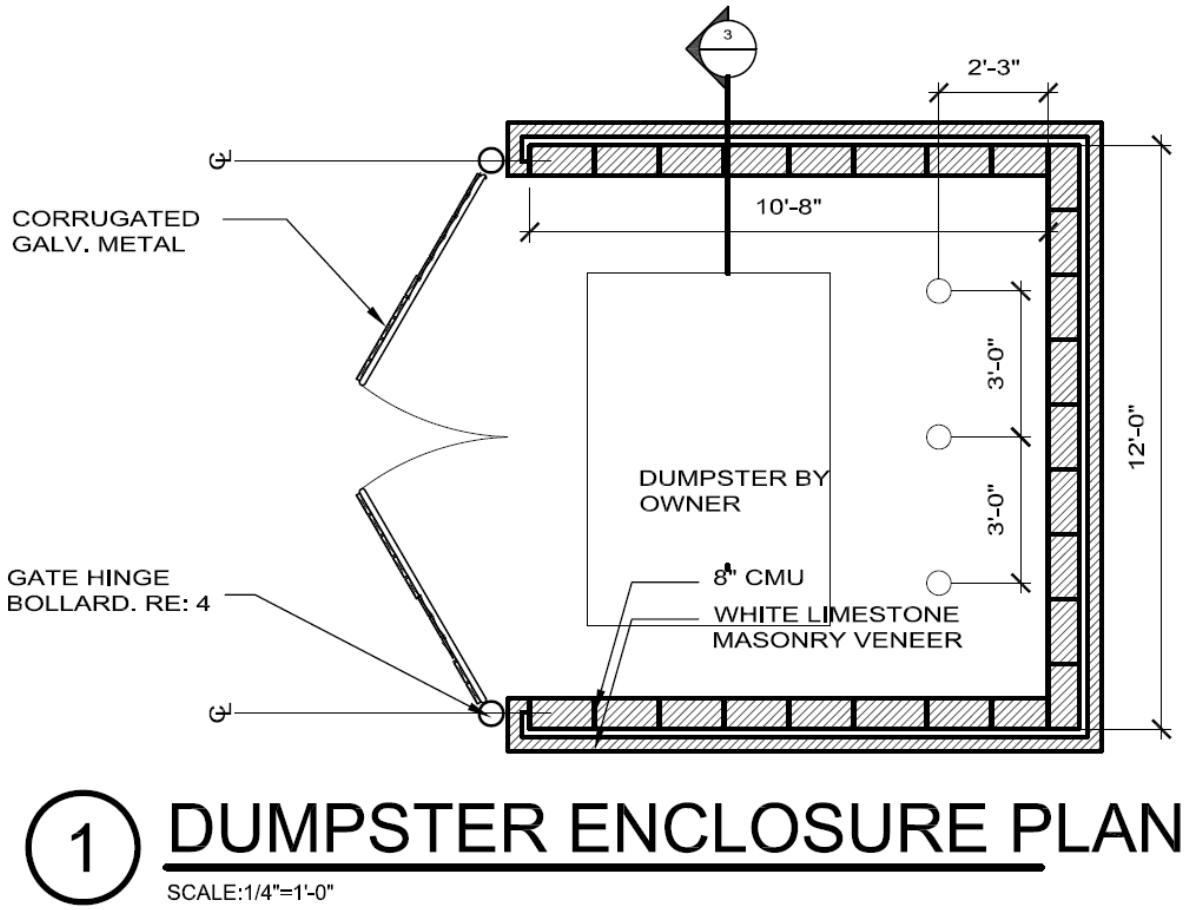

Graphic 4-J
Dumpster Enclosure

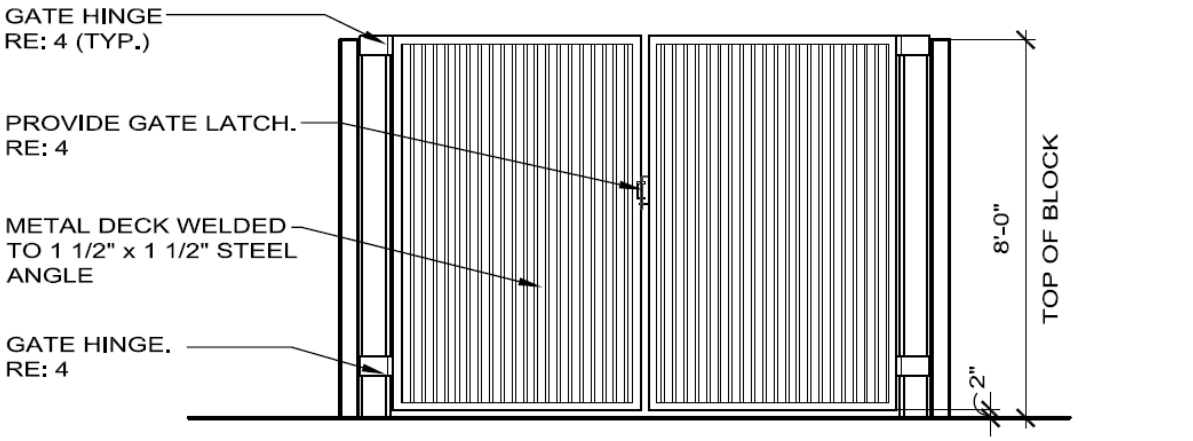

2 DUMPSTER ENCLOSURE PLAN

SCALE:1/4"=1'-0"

Graphic 4-K
Dumpster Enclosure

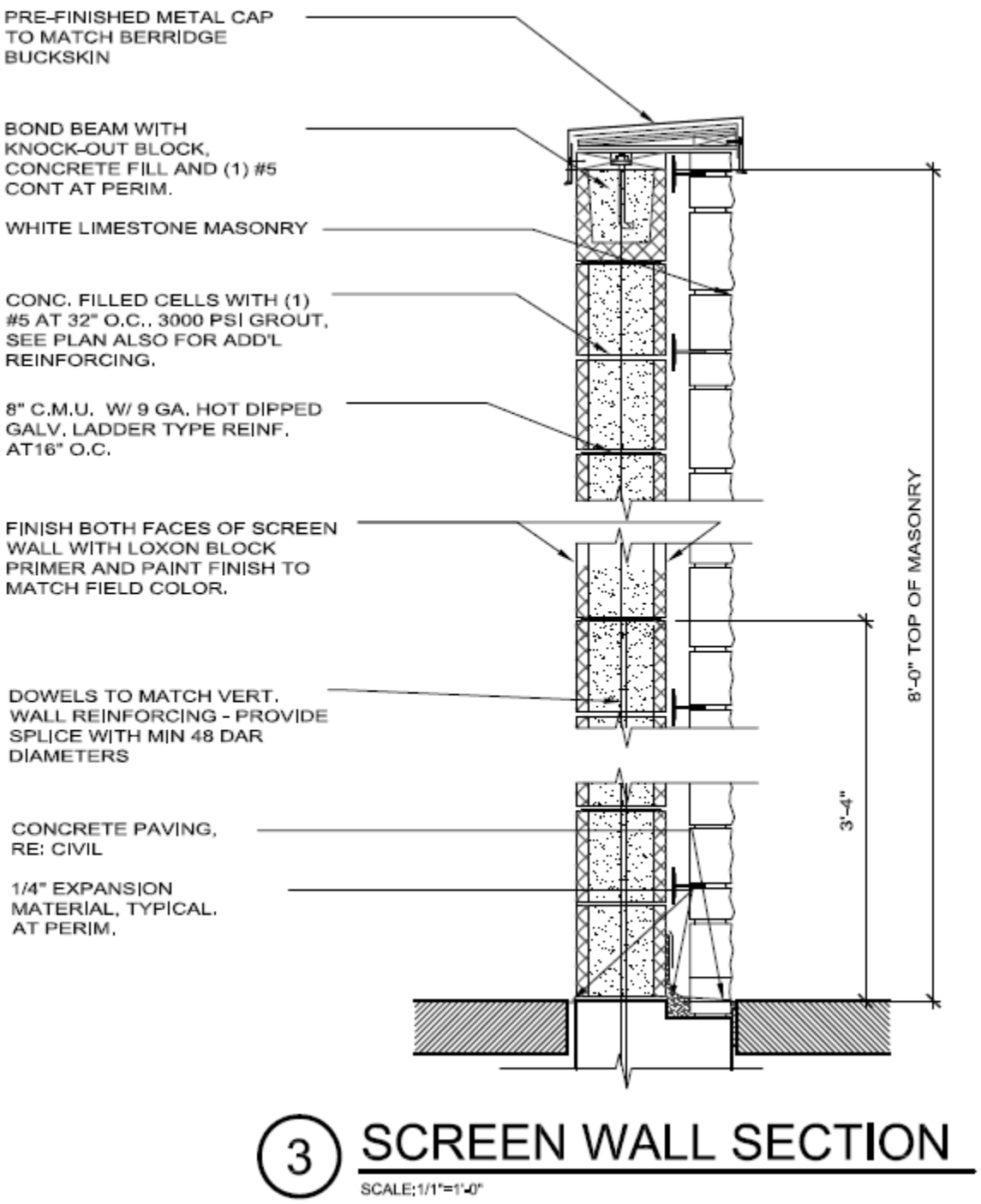

3 SCREEN WALL SECTION

SCALE: 1/1"=1'-0"

Graphic 4-L
Dumpster Enclosure

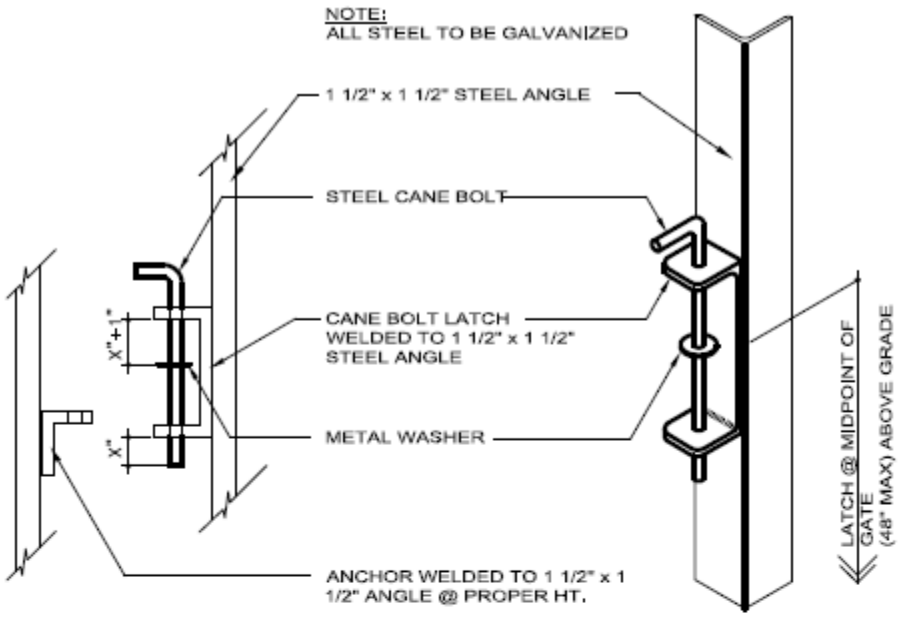

GATE LATCH DETAIL

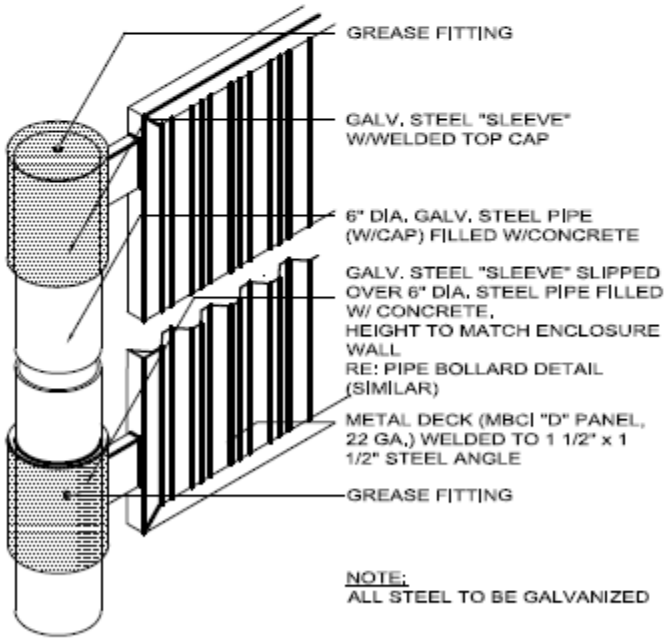

GATE HINGE DETAIL

4 GATE LATCH DETAIL

SCALE: N.T.S.

B. Temporary structures: Structures for uses incidental to construction work on the premises which are removed upon completion or abandonment of construction work are allowed upon permit from the building official.

C. Temporary structures: No structures, including recreational vehicles, construction trailers, or travel trailers may be used for on-site dwelling purposes.

Sec. 3.15 Comprehensive land use regulation matrix.

Attachment B.

TABLE 3-A

Uses Permitted by Right and Conditional Uses [1]

X = Use by right. **C = Conditional use permit required.** **PUD = Planned unit development.** *** = Active sales office required.**

Land Use Activity	R-LD	R-1	R-2	R-3	C-1	C-2	C-3	C-S	WAD	MMU	POD[2]	STCOD[3]	OS	MH	LI
Residential Uses															
Apartments				X											
Assisted Living Facilities				X	C	C									
Cluster housing			X	X									X		
Condominium				X					C	C					
Duplex				X									X		
Group homes	X	X	X	X											
Manufactured home / manufactured home park														X	
Single-family detached residence	X	X	X	X									X	X	
Townhouse				X						C					
Zero lot line homes			X	X											
Non-Residential Uses															
Accessory building/uses (all uses must be allowed per the zone)	X	X	X	X	X	X	X	X	X	X	X	X	X	X	X
Alterations, clothing					X	X	X	X	X	X		X	X		X
Ambulance service						X	X	X							X
Animal training schools						X	X	X							X
Appliance dealers / rental						X	X	X	X	X		X	X		X
Auction house						C	X						X		X
Auto body repair / painting							X								X
Auto dealers							X								X
Auto repair/detailing						X	X	X							X
Auto rental & leasing						X	X	X	C	C					X
Auto wrecker service							X								X
Bakers, wholesale							X								X
Banks or financial services					X	X	X	X	X	C		X	C		X
Banquet hall					C	X	X	X	X	C			C		
Barbers / beauty salons /day spa					X	X	X	X	X	X	X	X	X		X
Bars						C	C		C	C	C	C			C
Bed & breakfast				C	X	X	X	X	X	X	X		X		X
Bingo parlor						C	C		C	C					C
Boat engine repair & service						C	X	X	C	X					X
Boat hull repair & construction						C	X	C	C	X					X
Boat rental								X	X	X	X		X		X
Boat sales						C	X	X	X	X			C*		X
Bowling alleys						C	X			C					X

Land Use Activity	R-LD	R-1	R-2	R-3	C-1	C-2	C-3	C-S	WAD	MMU	POD[2]	STCOD[3]	OS	MH	LI
Cabinet makers & millwork shops					X	X	X	X	C	X			X		X
Candy & confection, wholesale							X					X			X
Caterers					X	X	X	X	X	X			X		X
Cellular communications tower							C								X
Cemetery or mausoleum	C	C	C	C	C	C	C								X
Charter boat-service					C				X	X	X				
Child day care center					C	X	X					X	X		X
Child day care family home				C	C								X		
Church / place of worship	X	X	X	X	X	X	X	X	X	X	X	X	X	X	X
Cigar lounge						X	X	X	X	X	X	X			X
Cigar & tobacco shop						X	X	X	X	X	X	X			X
Civic club						C	C	C	C	C			C		C
Commercial automobile parking lot / garage						C	X				X				X
Computer sales & service					X	X	X	X	X	X		X	X		X
Contractors (with outside storage)							X			C			C		X
Contractors (without outside storage)						X	X			X			X		X
Convenience stores (without fuel pumps)					C	X	X	X	X	X		X	X		X
Copy & duplicating services					X	X	X	X	X	X		X	X		X
Dancehalls						C	C		C	C	C				X
Dance instruction					X	X	X	X	X	X		X	X		X
Delivery services						X	X	X		X	X				X
Dinner theatre						X	X		X	X		X	X		X
Domestic animal training schools						X	X	X							X
Dry cleaners (pickup only)					X	X	X	X	X	X		X	X		X
Electrical equipment & supplies, wholesale						C	X								X
Electronics manufacturer															X
Exterminators & pest control						X	X	X							X
Farm	X														X
Fish & seafood, retail					C	X	X	X	X	X	X		C		X
Fish & seafood, wholesale						C	X		X	X					X
Fraternal organizations						C	C		C						C
Funeral home / mortuary					C	X	X								X
Game rooms & billiard parlors						C	C		C	C	C	C			C
Gasoline service stations / convenience stores						X	X					X			X
Glass sales, tinting & replacement						X	X	X							X
Golf course/country club	C	C	X	X											X
Greenhouse						X	X								X
Gunsmiths						X	X	X	X	X			X		X
Health club					C	X	X		X	X		X	C		X
Heavy machinery sales							X								X
High rise (all uses within must be allowed per the zone)									X	C	C		C		

Land Use Activity	R-LD	R-1	R-2	R-3	C-1	C-2	C-3	C-S	WAD	MMU	POD[2]	STCOD[3]	OS	MH	LI
Hospice	C					X	X								X
Hospital						X	X								X
Hotels & motels (with full service restaurant)						X	X		X	X	X				X
Hotels & motels (without full service restaurant)						C	C		C	C	C				C
Janitorial services & supplies						X	X	X				X			X
Kennel, outdoor							X								X
Laundry, self-service						X	X	X	C	C		X			X
Limousine service					X	X	X	X	C						X
Machine shops & welding							X	X							X
Mailbox rentals					X	X	X	X	C	X		X	X		X
Mailing service , bulk					X	X	X	X	X	X			X		X
Manufacturing															X
Marina									X	X	X		C		
Medical emergency clinics (w/ambulance)										X		X			X
Medical equipment and supplies						X	X	X		X		X			X
Medical laboratories					C	X	X	X							X
Monastery or convent	C			C		C	C								C
Motion picture theatre						X	X		C			X			X
Motorcycle sales & repair						C	X	X							X
Museums					C	C	X		X	X	X		X		X
Nurseries					X	X	X	X					X		X
Nursing homes	C			X	C	C									X
Office, professional					X	X	X	X	X	X	X	X	X		X
Open air market (all uses must be allowed per the zone)													C		
Pawnbrokers						X	X	X							X
Personal care home (assisted living)				X	X	X	X						C		X
Pet shops (Indoor kennels only)					X	X	X	X	X	X		X	X		X
Printers							X	X							X
Private clubs (as per TABC)						C	C		C	C	C				C
Private schools					X	X	X			X			X		X
Public use (governmental)	X	X	X	X	X	X	X	X	X	X	X	X	X	X	X
Pumps, industrial sales and service							X								X
Quick lube/oil change						X	X	X				X			X
Radio/television transmission tower (commercial)										C					X
Recreational vehicle park															C
Recreational vehicle sales, rental & repair							X								X
Recycling center															C
Rental service store (no heavy equipment)						X	X	X							X
Rental, trucks & heavy equipment							X								X
Restaurant equipment & supplies						X	X	X							X
Restaurants					C	X	X	X	X	X	X	X	X		X

Land Use Activity	R-LD	R-1	R-2	R-3	C-1	C-2	C-3	C-S	WAD	MMU	POD[2]	STCOD[3]	OS	MH	LI
Retail, heavy						X	X	X	X	X		X			X
Retail, light					X	X	X	X	X	X	X	X	X		X
Sailmakers					X	X	X	X	X	X			X		X
Sexually oriented business															X
Shipyard									X	X					X
Signs, manufacturing							X	X							
Skating rinks						C	X			X					X
Small engine repair						X	X	X							X
Smoke & head shop							X								X
Sports and recreational arenas										C					X
Stables	C														X
Storage, auto; inside							X								X
Storage, auto; outside							C								
Storage, boat; inside							X	X	X	X					X
Storage, boat; outside							X			X					X
Swimming pool & spa sales & supplies					C	X	X	X	C			X			X
Tele-video production						X	X	X	X	X					X
Theatre					C	X	X		X	X	X	X			X
Tire dealers and service						X	X	X							X
Trucking company															X
Upholstery shop					C	X	X	X	X	X			X		X
Veterinarians & animal hospitals (no outside kennels)					C	X	X	X	X	X		X			X
Veterinarians (with outside kennels)							X								X
Warehouse															X
Warehouses, offices & mini							X			X					X
Woodwork shops						X	X	X	X	X			X		X
Yacht/sailing club									X	X			X		

[1] **A property is prohibited from having an accessory use/structure without the presence of a principal use/structure.**

[2] **Please reference Seabrook Code of Ordinances, Appendix A, Comprehensive Zoning, Section 4.15. The Point Overlay District Regulations, 4.15.04. Uses.**

[3] **Please reference Seabrook Code of Ordinances, Appendix A, Comprehensive Zoning, Section 4.16. Seabrook Town Center Overlay District Regulations, 4.16.04. Uses.**

CITY OF SEABROOK

AGENDA BRIEFING

Date of Meeting: 7/05/2016

Submitter/Requestor: Gibbs **Date Submitted:** 6/22/2016

Presenter: Gibbs

Description/Subject: Remote Safe Deposit

Name of Applicant (if applicable) :

Legal Description (if applicable):

Purpose/Need: Administrative Issue

Background/Issue (What prompted this need?)**:** Employee bank runs

Impacted Parties (Expected/Notified)**:**

Miscellaneous Comments:

Recommended Action: Approve Contract with Loomis to provide safe vault and armored pickup from the city.

Attachments: Yes

Fiscal Impact:

Finance Officer Review	☒ Yes	☐ No
Budgeted	☐ Yes	☒ No
Budget Amendment Required	☒ Yes	☐ No

Budget Dept/Line Item Number: 107-5025
Future/Ongoing Impact: Increase in budget, safer work environment

Funding Comments: Possible increase to line of $1,500.00

Where on the agenda should this item be placed? Bid Awards

Suggested Motion: Approve

(All items are to be reviewed and approved by the city manager, except items submitted by the mayor or any council member or routine consent agenda items such as minutes and second & third readings of ordinances.)

Sent to City Attorney for review on Yes

Approved by City Attorney on Yes
(City Attorney should review all ordinances, resolutions, contracts and executive session items.)

All requests must be submitted to the City Secretary's Office no later than 12:00 p.m. on the Monday, one week prior to the regular Tuesday Council Meeting. All required attachments are to be submitted with the request. Incomplete items cannot be placed on the agenda.

CERTIFICATE OF INTERESTED PARTIES

FORM 1295

Complete Nos. 1 - 4 and 6 if there are interested parties.
Complete Nos. 1, 2, 3, 5, and 6 if there are no interested parties.

OFFICE USE ONLY
CERTIFICATION OF FILING

Certificate Number:
2016-64957

Date Filed:
06/02/2016

Date Acknowledged:

1 Name of business entity filing form, and the city, state and country of the business entity's place of business.

Loomis Armored US, LLC
Houston, TX United States

2 Name of governmental entity or state agency that is a party to the contract for which the form is being filed.

City of Seabrook

3 Provide the identification number used by the governmental entity or state agency to track or identify the contract, and provide a description of the services, goods, or other property to be provided under the contract.

2016-09
Armored Pickup and Safe Vault

4 Name of Interested Party	City, State, Country (place of business)	Nature of interest (check applicable)	
		Controlling	Intermediary

5 Check only if there is NO Interested Party. [X]

6 AFFIDAVIT

I swear, or affirm, under penalty of perjury, that the above disclosure is true and correct.

CRAIG L. ALBISTON
Notary Public, State of Texas
Comm. Expires 02-19-2020
Notary ID 8487899

AFFIX NOTARY STAMP / SEAL ABOVE

Signature of authorized agent of contracting business entity

Sworn to and subscribed before me, by the said SARAH KATTAPONG, this the 2ND day of JUNE, 20 16, to certify which, witness my hand and seal of office.

Signature of officer administering oath	Printed name of officer administering oath	Title of officer administering oath
	CRAIG L. ALBISTON	NOTARY PUBLIC

SAFEPOINT® AGREEMENT

The following paragraphs of this SafePoint® Agreement (the "Agreement") outline the agreements and understandings by and between

Loomis Armored US, LLC **("LOOMIS")** a Texas limited liability company, with offices at: 2500 City West Blvd., Ste. 900 Houston, TX 77042	and	**City of Seabrook** ("**CUSTOMER**") a(n) Texas corporation, with offices at: 1700 First Street Seabrook, TX 77586

This Agreement expresses and outlines the services, roles, and responsibilities of the parties. If additional locations are added to the scope of this Agreement, consistent terms and services will be maintained. These promises for such services and their related payments form the basis of this Agreement, made this 5th day of July, 2016. ("Effective Date").

Term: As used in this Agreement, the term "CUSTOMER" expressly includes any agents designated by CUSTOMER. The initial term of this Agreement will begin on the date of safe installation and shall continue for a period of 5 years per safe. ("Initial Term"). CUSTOMER agrees that LOOMIS is the exclusive provider for the services described in this Agreement at the location(s) contracted for. Except as expressly provided in this Agreement, this Agreement contains no provision for early termination in whole or in part, provided however, that (a) either party may terminate this Agreement upon five (5) days written notice to the other party in the event of the bankruptcy or insolvency of the other party and (b) LOOMIS may terminate this Agreement upon thirty (30) days written notice in the event of a material reduction or cancellation of insurance required pursuant to this Agreement.

Additional Safes and Safe: CUSTOMER acknowledges and agrees that any safes added to this Agreement after the Effective Date shall be subject to written amendment of this Agreement.

If additional or special services are required, CUSTOMER and LOOMIS agree to negotiate fees for these other services. Before these other services commence, a written amendment, signed by LOOMIS and CUSTOMER, will be attached to this Agreement confirming these additional services.

SERVICE SPECIFICATIONS

CUSTOMER and LOOMIS agree to the following Service Specifications:
Safe Specifications:
Description of Safe and/or equipment delivered (Safe hereinafter referred to as "Safe"):
TITAN, dual validator, single note feeder, on storage vault, wireless with integrated printer

Transportation Specifications:
Deposit and Conjunctive Change service and delivery of items at the following location(s) to/from CUSTOMER's designated, mutually agreed-upon location(s):

Loomis Branch	Customer Location	Maximum Liability Coverage	Service Frequency	Installation Date
3930 Houston	1700 First Street Seabrook, TX 77586	$75,000 per shipment	1X per week	On or before six weeks from the date this Agreement is executed.

Cash Management Specifications:

Services	
Deposit Processing & Verification	See Exhibit A
Change Order Preparation	See Exhibit A
Other	See Exhibit A

Total Monthly Package Fee: $435.56 per month per Safe unit, plus all applicable taxes and charges (e.g., fuel and Ancillary Items), due and payable as set forth in the terms and conditions.

This total package includes: Use of the Safe, transportation and cash management services. Also included is a manufacturer's warranty on the Safe.

Ancillary Items

Storage and Handling Fee: A fee of $275.00 per month per Safe will be charged starting on the month following the agreed upon Installation Date and shall continue until the month following the date that the Safe has been installed to offset the inventory storage, and handling cost associated with each unit. The Storage and Handling Fee shall only apply to the extent of installation delays arising from CUSTOMER'S delays or non-responsiveness.

Premise Time: Each service location under this Agreement (regardless of the number of Safes serviced at such location) is allotted seven (7) minutes of service time. Over seven (7) minutes, a fee of $2.50 per minute shall be assessed. Over fifteen (15) minutes, LOOMIS may elect to depart from the service location. Should LOOMIS be requested to return, the pick-up will be rescheduled as a Special Pick-up and will be charged at an agreed upon fee prior to rendering service.

Research, Special Request and Supply Fee: A fee of $65 per hour will be charged for research of LOOMIS' documents or receipts that have aged over sixty (60) days, unless it is determined to be solely an error of LOOMIS. Supplies provided by LOOMIS to CUSTOMER will be charged back to CUSTOMER at LOOMIS current cost plus 1%.

Excess Item Handling: A fee of $1.50 per Item is assessed when the number of Items exceeds 10 Items per shipment. An "Item" refers to the number of containers, sealed bags or other vessels LOOMIS is required to transport.

Non-Scheduled/Off-Day Service: $45.00 per trip, per location in Urban areas. Additional fees apply for off-route and remote locations.

Sunday/Holiday Service: $100.00 per trip, per location. Additional fees apply for off-route and remote locations.

Excess Liability: A fee of $0.35 per $1,000 or fraction thereof for any amounts which exceed the Maximum Liability Coverage amount per shipment.

Insurance Fee: A fee of 5% will be charged for all service provided.

New Account Setup Fee: WAIVED

If CUSTOMER does not desire Excess Liability Coverage, CUSTOMER must decline Excess Liability Coverage by initialing the box below:

☐ **Decline**

Reconstruction Obligations:
As explained in Section 5(c) of the Terms and Conditions, CUSTOMER has certain obligations regarding reconstruction of lost, damaged, or destroyed checks. If CUSTOMER prefers to opt-out of these reconstruction obligations, CUSTOMER must decline by initialing the box below.

☐ **Decline**

If CUSTOMER does NOT agree to reconstruction obligations or cannot meet its reconstruction obligations contained within Section 5(c), LOOMIS' liability for all checks contained within the shipment is limited to Ten Thousand Dollars ($10,000.00) regardless of the face value of the checks in shipment.

TERMS AND CONDITIONS

1. SERVICES and EQUIPMENT

a. **Services**. "**Services**" include the transportation and cash management services described below. The fees payable by CUSTOMER to LOOMIS for Services are described in this Agreement.

(1) Transportation Services. LOOMIS agrees to pick up, receive from, and/or deliver to CUSTOMER, or any designated agent of CUSTOMER, securely sealed or locked shipments which may contain any or all of the following: currency, coin, checks, securities, or other valuables. If the shipment container(s) received by LOOMIS from CUSTOMER or CUSTOMER's designated agent, do not appear to be securely locked or sealed, LOOMIS has the right to refuse to accept such shipment container(s). If LOOMIS accepts sealed container(s), LOOMIS will give CUSTOMER a receipt for said sealed container(s), and transport such sealed container(s) to the designated LOOMIS processing facility. CUSTOMER agrees that it will not conceal or misrepresent any material fact or circumstance concerning the contents of any shipment container. The fees payable under this Agreement are based upon the Maximum Liability Coverage amount and level(s) of service specified in this Agreement.

(2) Cash Management Services. Upon LOOMIS transportation and delivery of the shipment container(s) to LOOMIS facility, LOOMIS will verify the currency, coin, checks, securities, and/or other valuables received pursuant to the procedures as outlined in Exhibit A. If CUSTOMER has any specified procedure or condition to change this process, such procedure or condition shall be documented on Exhibit A. As part of the cash management services, LOOMIS will notify CUSTOMER by telephone (at the number listed on the Signature Page unless otherwise stated) within twenty-four (24) business hours of LOOMIS receipt of the relevant shipment container(s) if LOOMIS verification procedure indicates any of the following:

(a) Discrepancy in excess of $100.00; and/or
(b) Fraud of any kind.

LOOMIS' verification procedure includes confirming that the CUSTOMER's Deposit Ticket(s) matches the fine or actual count of funds contained in any sealed container as performed by LOOMIS pursuant to this Agreement. The term "Deposit Ticket" refers to the stated value supplied by the CUSTOMER at the time the shipment container is tendered to Loomis. Differences may include shortages, overages and/or counterfeit of any moneys processed by LOOMIS. LOOMIS agrees to be responsible for all verification errors discovered or claimed after the twenty-four (24) business hour period has expired.

(3) Additional or Special Services. If additional or special services are required, CUSTOMER and LOOMIS agree to negotiate fees for these other services. All additional or special services must be evidenced and agreed to in a signed amendment to this Agreement.

b. **Safe**. LOOMIS agrees to provide, and CUSTOMER agrees to take possession of, the Safe at each agreed upon service location.

(1) Inspection of Safe. CUSTOMER shall inspect the Safe within forty-eight (48) hours of delivery and installation. Unless CUSTOMER gives written notice to LOOMIS, specifying any defect in or other proper objection to the Safe, CUSTOMER agrees that it shall be deemed that the Safe is in good condition, repair and working order. During CUSTOMER'S normal business hours, LOOMIS shall have the right to request CUSTOMER to enter service location, inspect the Safe and observe its use.

(2) Suitability of Safe. CUSTOMER agrees that: (a) the Safe described herein is of the type and kind suitable for CUSTOMER's purpose and needs; (b) that unless otherwise provided herein, this Agreement is not subject to cancellation prior to the expiration of the Term; and, (c) CUSTOMER agrees to provide LOOMIS with forty-five (45) days prior written notice should it become necessary to move the Safe to a different location. CUSTOMER shall not move the Safe to another location without LOOMIS prior written consent, which shall not be unreasonably withheld or delayed. CUSTOMER further agrees to pay all costs associated with relocation of such Safe.

(3) Installation. CUSTOMER shall be responsible for any applicable permits or licenses which may be required for the installation and/or operation of Safes. CUSTOMER shall be responsible for any costs incurred by LOOMIS associated with delays and miscommunication associated with the Equipment installation date; and, if appointments are not kept, CUSTOMER may incur costs associated with Equipment redelivery and installation. Each Safe must be installed by LOOMIS or its designated agent. If necessary for the functionality of the Safe, CUSTOMER shall provide, at its own expense, and throughout the term of this Agreement: a dedicated, grounded electrical line and/or a dedicated phone line and/or data line, and any other necessary site preparation as may be required for appropriate installation and as needed to maintain the correct ongoing operation of the Safe. The Equipment is provisioned with a wireless modem which will serve as the primary source of remotely communicating with the Equipment; but, in the event a wireless solution is not available based on the conditions or physical location of the Equipment, LOOMIS will require the use of a dedicated data line provisioned with a static IP by CUSTOMER'S local Internet provider.

(4) Return or Repossession. Upon the expiration or earlier termination of this Agreement, CUSTOMER shall return the Safe to LOOMIS in good repair, condition and working order, ordinary wear and tear resulting from proper use excepted, by making the Safe available for de-installation and removal at CUSTOMER's cost and expense. In the event of loss or damage to the Safe, CUSTOMER shall, at LOOMIS option: (a) Pay the cost to place the Safe in good repair, condition and working order; or (b) Pay for a replacement Safe. No loss or damage to the Safe or any part thereof shall impair any obligation of CUSTOMER under this Agreement, which shall continue in full force and effect through the term of the Agreement. In the event that it becomes necessary, during, or at the end of the Agreement term for LOOMIS to take possession of and/or be required to remove the Safe, LOOMIS shall be entitled to reasonable reimbursement from CUSTOMER, of all expenses associated with removal and/or repossession of such Safe, and reasonable attorney's fees, if incurred to obtain appropriate authority for removal and/or repossession.

(5) Access to Safe. CUSTOMER shall provide LOOMIS or LOOMIS' agent, vendor, contractor or other designee access to the Safe during normal business hours, or at a mutually agreeable time to perform maintenance and service to ensure proper functionality and security of safe.

c. Certain Customer Representations and Agreements. Regarding the Services, CUSTOMER acknowledges and agrees that LOOMIS' count of all funds verified shall be deemed correct and final. CUSTOMER agrees that it will not conceal or misrepresent any material fact or circumstance concerning the property delivered to LOOMIS pursuant to this Agreement. Regarding the Equipment CUSTOMER agrees that title and right to possession of the Safe shall at no time pass to CUSTOMER. The Safe is and shall remain personal property of LOOMIS, notwithstanding the fact that the Safe may be affixed, attached to or imbedded in or upon real property or a building, whether by cement, bolts, or other means. The Safe must be firmly and securely attached to the concrete foundation. CUSTOMER represents and guarantees to LOOMIS that the physical location(s) where the Safe is located shall at a minimum have a fully functional monitored premise alarm, including at a minimum door contacts, and fire or smoke detection. Each CUSTOMER location shall also have reasonable and customary security measures for its industry, including, but not limited to, fully functional door locks and video camera recorded surveillance on the Safe. Video surveillance recordings must be retained a minimum of thirty (30) days. If at any time during this Agreement CUSTOMER is (i) negligent regarding CUSTOMER'S site security obligations of the service location where the Safe is located; (ii) in breach of the site security obligations set out in this Agreement; or (iii) if CUSTOMER fails at any time during this Agreement to maintain the security requirements in this Section 1(c), then any LOOMIS guarantee of funds shall be void and LOOMIS shall have no further obligation to reimburse CUSTOMER for any resulting loss of funds or Equipment. Failure by CUSTOMER to correct any site security or Equipment security deficiencies is an event of Default under Section 12 for which LOOMIS may terminate this Agreement.

2. BILLING AND PAYMENT

CUSTOMER agrees to pay LOOMIS the Total Monthly Package Fee, plus any Ancillary Items described in this Agreement or any Exhibit or Addendum hereto and any applicable federal, state or local taxes within fifteen (15) days of invoice. LOOMIS at its discretion may impose, and CUSTOMER agrees to pay, a service charge of one and one-half percent (1.5%) per month or eighteen percent (18%) per annum, or such lesser rate as may be required by law, on any late or unpaid invoice amounts due and payable to LOOMIS. CUSTOMER further agrees that undisputed portions of any invoice shall be remitted to LOOMIS in accordance with normal payment terms. However, should CUSTOMER fail to pay any undisputed amounts within thirty (30) days of the invoice date, LOOMIS may, in its sole discretion, terminate this Agreement upon ten (10) days written notice. CUSTOMER agrees to notify LOOMIS of dispute(s) arising from any

invoice within thirty (30) days after such invoice has been presented to CUSTOMER, or such claim shall be deemed waived. All amounts due hereunder shall be paid by cash, check or ACH unless otherwise agreed in this Agreement.

3 RATE ADJUSTMENT

LOOMIS shall annually increase the service fee(s) based upon the year to year changes in the Consumer Price Index (CPI) or other applicable economic factor(s).

To account for future movements in the price of diesel fuel LOOMIS shall assess a monthly fuel fee based on U.S. average diesel prices as measured and published by the Department of Energy (WWW.EIA.DOE.GOV). The monthly fuel fee shall equal the product of the applicable percentage (based on the chart below) multiplied by the aggregate monthly service fee (including any applicable Ancillary Items). LOOMIS established baseline is $1.91. Any cost above the $1.91 baseline cost will be adjusted on a monthly basis by 0.5% on price movements of 10 cents per gallon up to $2.41. At $2.41 per gallon the rate shall remain constant until fuel reaches $3.51 per gallon, upon which the .5% increment increase shall resume per each .10 cost increase per gallon (i.e. if diesel prices rise to $2.01, your fuel fee is increased by 0.5%) The applicable fuel fee percentage will be based on the national average of diesel fuel prices published on the Department of Energy Website averaged over the first four Mondays of the month rounded to the next cent. The table referenced below is for guidance only and does not reflect the maximum rate which might be accessed.

Minimum	Maximum	Per Gallon	Fee (%)
$ 3.91	$4.00	$ .10	5.0%
$ 3.81	$ 3.90	$ .10	4.5%
$ 3.71	$ 3.80	$ .10	4.0%
$ 3.61	$ 3.70	$ .10	3.5%
$ 3.51	$ 3.60	$ .10	3.0%
$ 3.41	$ 3.50	$ .10	2.5%
$ 3.31	$ 3.40	$ .10	2.5%
$ 3.21	$ 3.30	$ .10	2.5%
$ 3.11	$ 3.20	$ .10	2.5%
$ 3.01	$ 3.10	$ .10	2.5%
$ 2.91	$ 3.00	$ .10	2.5%
$ 2.81	$ 2.90	$ .10	2.5%
$ 2.71	$ 2.80	$ .10	2.5%
$2.61	$ 2.70	$ .10	2.5%
$ 2.51	$ 2.60	$ .10	2.5%
$ 2.41	$ 2.50	$ .10	2.5%
$ 2.31	$ 2.40	$ .10	2.0%
$ 2.21	$ 2.30	$ .10	1.5%
$ 2.11	$ 2.20	$ .10	1.0%
$ 2.01	$ 2.10	$ .10	0.5%
$ 1.91	$ 2.00	$ .09	0.00%

a. LOOMIS reserves the right in times of global economic downturn or due to changes in regulatory obligations to renegotiate rates and fees in good faith with CUSTOMER. In the event that CUSTOMER refuses to consent to such adjustment(s) or fee(s), LOOMIS shall have the right to terminate this Agreement upon thirty (30) days written notice to CUSTOMER.

4. LIABILITY

a. General Liability. LOOMIS agrees to assume the liability for any Cargo Loss, according to the terms of this Agreement: (1) for Manual Drop Shipments, from the time LOOMIS signs for and receives physical custody of the shipment container(s) or (2) for Validated Cash, when valuables are deposited into the Safe note validator. The term "Cargo Loss" shall mean any loss or destruction of currency ("Cargo") that occurs while the Cargo is under Loomis' sole care, custody and control. The term "Manual Drop Shipments" shall refer to the currency, coin or checks inserted into the manual drop section of the Safe. The term "Validated Cash" shall refer to the currency inserted and accepted by the Safe bill validator. LOOMIS' responsibility terminates when the CUSTOMER or CUSTOMER's designated agent takes physical possession of the shipment container(s) and signs LOOMIS receipt. If it is impossible to complete the delivery, LOOMIS shall be responsible for any Cargo Loss until the shipment container(s) is returned to the CUSTOMER and a signed receipt obtained. Before valuable(s) are deposited into the Safe, LOOMIS assumes no liability for any loss. Also, LOOMIS shall incur no liability whatsoever (i) for losses arising from the misuse, abuse, malfunction or destruction of the Safe and/or bill validator(s) caused by CUSTOMER, its employees, directors, agents, contractors or assigns, (ii) from loss(es) or destruction arising, in whole or part, from fraud, negligence, or willful or criminal misconduct on the part of CUSTOMER, its employees, contractors, agents, directors or assigns, (iii) from unexplained or ongoing patterns of loss, including losses arising from repeated or similar events, as defined or determined by LOOMIS in its sole discretion, or (iv) destruction including but not limited to counterfeit bills placed into safe as deposits. LOOMIS reserves the right to take any and all action as may be reasonably necessary to prevent money laundering to the extent permitted under applicable law or regulation or as may be required by any regulatory body that may exert a right of control over LOOMIS.

UNDER NO CIRCUMSTANCES WILL LOOMIS BE LIABLE TO THE OTHER PARTY FOR LOST PROFITS OR FOR ANY INDIRECT, INCIDENTAL, CONSEQUENTIAL, SPECIAL, PUNITIVE OR EXEMPLARY DAMAGES ARISING FROM OR RELATED TO THE SUBJECT MATTER OF THIS AGREEMENT OR SERVICES PROVIDED PURSUANT TO THIS AGREEMENT, REGARDLESS OF THE TYPE OF CLAIM AND EVEN IF THAT PARTY HAS BEEN ADVISED OF THE POSSIBILITY OF SUCH DAMAGES; SUCH AS, BUT NOT LIMITED TO LOSS OF REVENUE, LOSS OF INTEREST, LOST DATA, DATA TRANSMISSION ERROR OR ANTICIPATED PROFITS OR LOST BUSINESS. EXCEPT FOR A CARGO LOSS, WHICH IS SUBJECT TO THE MAXIMUM LIABILITY COVERAGE AMOUNT SPECIFIED HEREIN, IN NO EVENT SHALL LOOMIS' LIABILITY TO CUSTOMER ARISING OUT OF THIS AGREEMENT EXCEED THE AMOUNT REPRESENTED BY THAT PORTION OF THE SERVICE CHARGE CONTAINED HEREIN FOR THE SERVICE(S) PAID BY CUSTOMER FOR SUCH SERVICES.

5. CLAIM PROCEDURES

The following provisions shall control in the event of any Cargo Loss, notwithstanding anything to the contrary contained in this Agreement.

a. Notification. In the event of a Cargo Loss, CUSTOMER agrees to notify LOOMIS in writing within four (4) calendar days after the loss is discovered or should have been discovered in the exercise of due care and in no event later than forty-five (45) days after the pick-up by LOOMIS of the securely sealed shipment container in connection with which the loss is asserted. If notice of the loss is not received by LOOMIS within this forty-five (45) day period, the claim for the loss shall be deemed waived by CUSTOMER. It is agreed that both parties will work together to determine the extent of the loss, and if possible, the cause of loss.

b. Limitations. Notwithstanding anything set forth in this Agreement to the contrary, the sole liability of LOOMIS (except as stated in this Agreement) in the event of a Cargo Loss, from whatever cause, shall be subject to the Maximum Liability Coverage amount set forth in this Agreement or the Excess Liability Coverage amount, if not declined by CUSTOMER.

c. Check Reconstruction. CUSTOMER shall retain sufficient information to allow Reconstruction of checks in the event of a Cargo Loss. In no event shall LOOMIS' liability for any Cargo Loss, irrespective of the Maximum Liability Coverage amount, include the face value of any lost or destroyed check. CUSTOMER agrees it will cooperate and assist in reconstructing lost, damaged, or destroyed checks constituting a part of any Cargo Loss. LOOMIS' liability, unless otherwise stated in this Agreement, shall be limited to the payment to the CUSTOMER for the reasonable costs necessary to reconstruct the checks, but never to exceed ten thousand dollars ($10,000.00) per shipment. The term "Reconstruction" shall mean the identification of the face amount, the identity of the maker or endorser of the check, identification of the payee and identification of the financial institution upon which the check is drawn. CUSTOMER agrees

in the event of a loss, that any liability of LOOMIS shall be reduced by the face value of reconstructed or recovered item(s).

d. **Proof**. Upon the request of LOOMIS, CUSTOMER will furnish a proof of any Cargo Loss to LOOMIS or its insurance carrier. Once reimbursement has been made to CUSTOMER, LOOMIS and its insurer shall receive any and all of the CUSTOMER's rights and remedies of recovery.

6. LIMITATIONS & FORCE MAJEURE

a. **Limitations**. The CUSTOMER agrees that LOOMIS will not be liable for any loss caused by or resulting from Shortages claimed in the contents of the sealed or locked shipment(s) (in the case of manual drop deposits), for indirect, consequential or incidental damages or losses, non-performance or delays, or for the breakage of statuary, marble, glassware, bric-a-brac, porcelains and similar fragile articles. A "Shortage" shall mean any difference between the stated value on the Deposit Ticket and the actual value of the contents of any sealed shipment container. Likewise, LOOMIS shall not be liable to CUSTOMER for failure to render service if LOOMIS in its sole discretion determines the same may endanger the safety of CUSTOMER's property or personnel or LOOMIS' vehicles or employees.

b. **Force Majeure**. It is further agreed that LOOMIS shall not be held accountable or liable for any damages or losses, whether controlled or uncontrolled, and whether such loss be direct or indirect, proximate or remote, or be in whole or in part caused by, contributed to, or aggravated by the peril(s) for which liability is assumed by LOOMIS, resulting from:

(1) hostile or warlike action in time of peace or war, including action hindering, combating or defending against an actual, impending or expected attack; (i) by any government or sovereign power (de jure or de facto) or (ii) by any agent of any such government, power authority or forces;

(2) nuclear reaction, nuclear radiation, radioactive contamination or any weapon of war, insurrection, rebellion, revolution, civil war, acts of terrorism, usurped power, or action taken by governmental authority; seizure or destruction under quarantine or customs regulations; confiscation by order of any governmental or public authority; or risks of contraband or illegal transportation or trade; or

(3) acts of God, strikes, labor disturbances, while shipments are being transported by aircraft (including air piracy, explosion, crash or other incident on board the aircraft), impostor pick-up or deliveries, or other conditions or circumstances beyond LOOMIS reasonable control.

c. **Ownership.** CUSTOMER expressly understands and accepts that ownership (title) to cash or other valuables transported or stored by LOOMIS shall never transfer to LOOMIS.

7. DISPUTES

CUSTOMER and LOOMIS agree that except for disputes regarding over-payment or non-payment of fees for services under this Agreement, any controversy or claim, including any claim of misrepresentation, arising out of or related to this Agreement, or the furnishing of any service by LOOMIS to CUSTOMER, shall be settled by litigation. Jurisdiction and venue of any dispute under the Agreement shall exclusively be Houston, Harris County,Texas.

8. CONTAINER VALUE LIMITATION

CUSTOMER acknowledges and agrees that the maximum value which LOOMIS will transport in any individual container will not exceed two hundred & fifty thousand dollars ($250,000). If the total value of a shipment which CUSTOMER seeks to tender to LOOMIS exceeds two hundred & fifty thousand dollars ($250,000), such shipment must be broken down into separate shipment containers of two hundred fifty thousand dollars ($250,000) or less.

9. WARRANTIES & REPRESENTATIONS

CUSTOMER acknowledges that LOOMIS is not the manufacturer of the Safe and further agrees that any and all warranties on the Safe are limited to those warranties extended by manufacturer. The complete details of such warranty are available from your service representative. The remedy above shall be the EXCLUSIVE remedy in the event of a breach of this warranty or in the event of damages, action, demand or fee arising from malfunction or latent defect of the Safe, and it is expressly agreed that neither party shall be liable for special, incidental, indirect or consequential damages arising out of, or in any way connected with this Agreement. THIS LIMITED WARRANTY EXCLUDES ALL OTHER WARRANTIES; EXPRESS OR IMPLIED, INCLUDING ANY WARRANTY OF MERCHANTABILITY OR FITNESS FOR A PARTICULAR PURPOSE, WHETHER OR NOT SUCH PURPOSES OR SPECIFICATIONS ARE DESCRIBED HEREIN. LOOMIS FURTHER DISCLAIMS ANY DAMAGE OR LOSS OF PROPERTY OR VALUE CAUSED BY EQUIPMENT WHICH HAVE BEEN THE SUBJECT OF MISUSE, ABUSE, NEGLIGENCE, OR USED IN VIOLATION OF ANY PRODUCT MANUALS, INSTRUCTIONS OR WARNINGS, OR MODIFIED REPAIRED OR SERVICED BY PERSONS NOT AUTHORIZED BY LOOMIS OR THE MANUFACTURER, OR IMPROPERLY RELOCATED. ALL OBLIGATIONS OF LOOMIS UNDER THIS AGREEMENT SHALL BE VOID IF CUSTOMER IS IN BREACH OF ANY OF THE TERMS AND CONDITIONS OF THIS AGREEMENT.

For Validated Cash, LOOMIS guarantees that the amount reflected on any Safe's audit report will accurately reflect the contents of the Safe. LOOMIS shall not be responsible or liable for any consequential, indirect, punitive, lost profits or similar damages or losses caused by a malfunction, software failure or failure of equipment to work properly for any reason whatsoever. In addition, CUSTOMER agrees that under no circumstances will LOOMIS be liable for any loss of funds to the extent that such loss of funds arises from the removal, theft, damage to or unlawful taking of any Tidel Series 3 model safe, or smaller model or any safe that is materially similar in dimensions and size (a "Series 3 Non-Covered Loss" or "Non-Covered Loss"). Furthermore, to the extent that CUSTOMER'S banking institution has advanced provisional credit, CUSTOMER agrees to notify its banking institution and reverse the provisional credit so that CUSTOMER may be debited for any Series 3 Non-Covered Loss. And, in the event that any bank providing provisional credit files a claim against LOOMIS for a Series 3 Non-Covered Loss, CUSTOMER also agrees to fully reimburse LOOMIS within ten (10) business days of LOOMIS' request.

~~10. INDEMNITY~~

11. INSURANCE

With regard to the Safe provided hereunder, CUSTOMER shall procure, maintain and pay for: (a) all risk insurance against loss of and damage to the Safe for not less than the full replacement value of the Safe, naming LOOMIS as loss payee and (b) combined public liability and property damage insurance with limits as approved by LOOMIS, naming LOOMIS as an additional insured. The insurance shall be in such form and with such company or companies as shall be reasonably acceptable to LOOMIS, shall provide at least thirty (30) days advance written notice to LOOMIS of any cancellation, change or modification, and shall provide primary and non-contributory coverage for the protection of CUSTOMER and LOOMIS without regard to any other coverage carried by CUSTOMER or LOOMIS protecting against similar risks. CUSTOMER shall provide LOOMIS with an original policy or certificate evidencing such insurance. CUSTOMER hereby appoints LOOMIS as CUSTOMER's attorney in fact with power and authority to do all things, including, but not limited to, making claims, receiving payments and endorsing documents, checks or drafts necessary or advisable to secure payments due under any policy of insurance required under this Agreement. If CUSTOMER fails to purchase such insurance as required under this provision, LOOMIS shall have the right, in its sole option, to acquire same at CUSTOMER's sole expense and cost or terminate this Agreement. In case of failure of CUSTOMER to procure or maintain said insurance, as more fully outlined below, or to pay fees, assessments, charges and taxes, all as specified in this Agreement, LOOMIS shall have the right, but shall not be obligated, to effect such insurance, or pay said fees, assignments, charges and taxes, as the case may be. In that event, the cost thereof shall be repayable to LOOMIS with the next invoice, and failure to repay the same shall carry with it the same consequences as failure to pay any amount(s) due for service provided hereunder.

12. DEFAULT

a. The parties agree that any early termination of this Agreement by Customer, except in an event of default by Loomis would cause Loomis to incur monetary damages which are difficult or impossible to estimate. If CUSTOMER terminates this Agreement prior to the expiration of the term of this Agreement, CUSTOMER shall pay to LOOMIS liquidated damages ("Termination Fee") equal to seventy-five percent (75%) of the charges for each location multiplied by the remaining months contained in the initial or renewal term, as the case may be. The parties agree that this Termination Fee is a fair and reasonable estimate of the monetary damages incurred by LOOMIS as a result of early termination or breach of the Agreement by CUSTOMER. The parties agree that the Termination Fee is a form of liquidated damages and is not a penalty.

If (i) LOOMIS fails to perform any material obligation under this Agreement and such failure continues for sixty (60) days after LOOMIS receives written notice from CUSTOMER specifying in reasonable detail the nature of that failure or (ii) LOOMIS becomes the subject of a proceeding under the U.S. Bankruptcy Code, CUSTOMER may terminate this Agreement by giving written notice to LOOMIS without payment of any Termination Fee.

Upon expiration or termination of this Agreement for any reason, all Safes or materials provided by LOOMIS in connection with the expired or terminated Services will be made available to LOOMIS at the service location within five (5) business days after the effective date of expiration or termination and all earned, uninvoiced and unpaid fees and expenses will become due and payable sixty (60) days following such expiration or termination. The termination rights set forth in this Section are cumulative and are in addition to all other rights and remedies available to the parties.

b. If CUSTOMER terminates this Agreement, or its Agreement with LOOMIS for cash and/or armored car service(s) with regard to such Safe, prior to the end of the term, or fails to pay any invoices or other amount herein, or if CUSTOMER fails to observe, keep or perform any other provision of this Agreement required to be observed, kept or performed by CUSTOMER, LOOMIS shall have the right to exercise any one or more of the following remedies: (a) to declare the entire earned amount hereunder immediately due and payable without notice or demand to CUSTOMER; (b) to sue for and recover payments, then accrued or thereafter accruing; (c) to take possession of the Safe, without demand or notice, wherever same may be located, without any court order or other process of law; (d) to terminate this Agreement; or (e) to pursue any other remedy at law or in equity. If there are losses arising from repeated similar loss events, as determined by LOOMIS in its sole discretion, then LOOMIS shall have the right to (a) to sue for and recover payments, then accrued or thereafter accruing and unrecovered expenditure to install and de-install the Equipment; (b) to take possession of the Equipment, without demand or notice, wherever same may be located, without any court order or other process of law; (c) to terminate this Agreement; or (d) to pursue any other remedy at law or in equity. CUSTOMER hereby waives any and all damages occasioned by the removal and taking of possession of the Safe. Notwithstanding any repossession or any other action which LOOMIS may take, CUSTOMER shall be and remain liable for the full performance of all obligations on the part of the CUSTOMER to be performed under this Agreement. All of LOOMIS' remedies are cumulative, and may be exercised concurrently or separately.

13. MISCELLANEOUS

a. **Security Filings**. CUSTOMER hereby agrees to execute any and all documents requested by LOOMIS to perfect its security interest in the Safe. If LOOMIS consents to a change of service location of the Safe, CUSTOMER agrees to execute any further documentation necessary perfect LOOMIS' security interest. All costs and expenses associated with filing of LOOMIS security interest in the Safe shall be at the sole expense of CUSTOMER.

b. **Holiday Service**. CUSTOMER agrees that Holiday Service Rates shall apply to any service performed under this Agreement which falls on: New Year's Day, Martin Luther King Day, President's Day, Memorial Day, Independence Day, Labor Day, Veterans Day, Columbus Day, Thanksgiving Day, federal banking and any local applicable observed holiday. Charges for service on such dates will be as stated upon page 2 of this Agreement, excluding Christmas Day. LOOMIS will not provide Christmas Day service.

c. **Bankruptcy**. If any proceeding under the Bankruptcy Act, as amended, is commenced by or against the CUSTOMER, or if the CUSTOMER is declared insolvent, or if CUSTOMER makes any assignment for the benefit of its creditors, or if a writ of attachment or execution is levied on the Safe and is not released or satisfied within ten (10) days thereafter, or if a receiver is appointed in any proceeding or action to which the CUSTOMER is a party, any Safe provided hereunder shall not be treated as an asset of CUSTOMER. The Safe is, and shall at all times be and remain, the sole

and exclusive property of LOOMIS; and the CUSTOMER shall have no right, title or interest therein or thereto except as expressly set forth in this Agreement.

d. Non–Warranty Service Calls and Customer Routine Maintenance. CUSTOMER shall be responsible for all non-warranty SafePoint® costs associated with any repair or service call; including but not limited to the following non-warranty issues: abuse, damage to cassettes due to mishandling, tube/coin jams, bill jams, screen protector damage or replacement, network or phone line related problems, damage due to spillage or infestation, equipment resets, phone fixable problems, user programming problems, equipment upgrades, printer jams or printer issues related to incorrect paper type; along with any repairs or service call arising out of CUSTOMER's negligence, willful misconduct, or failure to perform any material obligation within this Agreement or normal CUSTOMER preventative maintenance. CUSTOMER shall also be responsible for the cost of any consumable items such as printer tape, bill trays, printer paper, cleaning cards, and screen protectors.

~~**e. Confidentiality.**~~

f. Entire Agreement. This Agreement: (a) shall be governed by and construed in accordance with the laws of the State of Texas without reference to conflict of laws principles; (b) constitutes the entire agreement and understanding of the parties with respect to its subject matter, except that the terms of any agreement regarding confidential information of the parties shall be deemed to be a part of this Agreement; (c) and the terms and conditions including fees set forth in it shall be treated as confidential information; (d) is not for the benefit of any third party; (e) may not be amended except by a written instrument signed by both CUSTOMER and LOOMIS; (f) may not be assigned by CUSTOMER without LOOMIS prior written consent; (g) may be assigned by LOOMIS, provided that LOOMIS shall furnish written notice of such assignment to CUSTOMER; (h) shall be binding upon any assignees, and defined terms used in this Agreement to apply to either party shall be construed to refer to such party's assignee; (i) is the product of negotiation; (j) is subject to a contractually agreed one (1) year statute of limitations on all claims or the minimum allowable by applicable law; (k) shall not be deemed to have been drafted by either party; (l) contains article and section headings which are for convenience of reference only and which shall not be deemed to alter or affect the meaning or interpretation of any provision of this Agreement; (m) does not make either party the agent, fiduciary or partner of the other; (n) does not grant either party any authority to bind the other to any legal obligation; (o) does not intend to nor grant any rights to any third party and (p) shall remain valid and enforceable despite the holding of any specific provision to be invalid or unenforceable, except for such specific provision. The waiver by either party of any rights arising out of this Agreement shall not cause a waiver of any other rights under this Agreement, at law or in equity. Any and all correspondence regarding this Agreement shall be delivered via certified mail (return receipt requested) or verifiable third-party courier (return receipt requested).

This Agreement may be executed in two or more identical counterparts, each of which shall be deemed to be an original and all of which taken together will be deemed to constitute one and the same agreement when a duly authorized representative of each party has signed a counterpart. The parties may sign and deliver this Agreement by facsimile or electronic (i.e., .pdf) transmission. Each party acknowledges that the delivery hereof by facsimile or electronic transmission will have the same force and effect as delivery of original signatures.

IN WITNESS WHEREOF, the parties hereto have caused this Agreement to be executed by their respective duly authorized representatives.

CUSTOMER

By _____

Printed Name _____

Title _____

Date _____

Tel _____

LOOMIS

By _____

Printed Name _____

Title _____

Date _____

EXHIBIT A

Cash Management Services:

Deposit Processing

- CUSTOMER Validated Cash will be processed at LOOMIS' local vault.
- CUSTOMER's Manual Drop Shipments, not verified by LOOMIS, will be delivered to the CUSTOMER's bank vault for processing.
- CUSTOMER's reports will indicate Safe's deposit totals segregated by Manual Drop Shipments and Validated Cash. It shall include the end of day totals and bank deposit totals.

Change Order Funds

- CUSTOMER will be responsible for ordering all change from their financial institution.

Change Order Delivery Fee *included in the rate*

CAPITAL IMPROVEMENT PROGRAM (CIP)

PROPOSED

FY 2017-22+

Table of Contents

Introduction 3
Authority 3
Purpose 4
Financing the Capital Budget 5
Role of the Comprehensive Plan in the Capital Improvement Program 5
Presentation Format 6
Funds - Overview 6
General Fund 7
Capital Impact Fees Fund 7
Enterprise Fund 7
Future Projects 7
CIP PROJECTS 9

Introduction

I am pleased to present the Capital Improvement Program (CIP) for FY2017-22 for consideration by the Seabrook City Council. Last year, we introduced an updated comprehensive CIP and we are continuing to make significant strides toward a more fiscally responsible and rational process for the prioritization and approval of the City's capital assets and addressing our long-term liabilities.

My goal for this comprehensive CIP is to continue use this document as a planning and budgeting tool to enhance the Council's understanding and decision making in regards to the capital budget. The overall goals of this tool are to:

- Present each year along with the draft budget document so that it can be reviewed by staff and council in separate workshops to address content and priorities
- Projects supported by Enterprise Fund are differentiated from the General Fund. The Enterprise Fund supports Water and Sewer projects.
- Detailed project information will be included on each project showing a brief description of project, timeline, proposed funding (if currently identified), and costs if project is approved and completed.

A Total Multi-Year Capital Budget for FY 2017-22 of $ **97,754,323** is proposed. Of the **$97 million** in FY 2016-17, **$4,685,911** is proposed by different funding sources.

Finally, this CIP was generated as a cohesive team that understands the City's overall goals and objectives from its Strategic Plan, Comprehensive Plan 2030 (June 2010), and new Draft Comprehensive Plan 2040 pending approval along with all applicable city financial policies.

Authority

The preparation of the Capital Improvement Program (CIP) is done in accordance with the Charter. As laid out in the Charter Section 5.02 (11), the City Manager submits the proposed CIP to City Council each year. The Capital Improvement Program consists of a capital budget for the ensuing fiscal year and a capital improvement program for the four fiscal years following. There is also a "2022+" column to depict additional projects that have been identified for potential longer range goals.

Seabrook City Charter

Section 5.02 (11)

> *A Five (5) Year Capital Program and Budget, which may be revised and extended each year to indicate capital improvements pending or in the process of construction or acquisition, and shall include the following items:*
>
> *a. A summary of proposed programs;*

b. A list of all capital improvements which are proposed to be undertaken during the five (5) fiscal years next ensuing, with appropriate supporting information as to the necessity for such improvements;

c. Cost estimates, method of financing and recommended time schedules for each such improvement; and

d. The estimated annual cost of operating and maintaining the facilities to be constructed or acquired.

e. Adoption of the budget is for the ensuing fiscal year only and does not constitute adoption for the subsequent four (4) fiscal years.

Purpose

The Capital Improvement Program (CIP) is a recommended schedule of improvements to City capital assets, including the planning and design thereof. The CIP is a 5-year plan, of which the first year represents the proposed capital budget for the current fiscal year. The remaining four years of the CIP serve as a financial plan for capital investments. The CIP will be updated annually, at which time the schedule of projects will be re-evaluated, and another fiscal year added with new projects, as appropriate.

Capital assets are comprised of facilities, infrastructure, equipment, and networks that enable or improve the delivery of public sector services. The procurement, construction, and maintenance of capital assets are critical activities in the management of those assets. The threshold for the City's definition of a capital asset is:

- The asset has a gross purchase price equaling $50,000 or more.
- The asset has a useful life of 5 years or more.

Capital projects are major projects undertaken by the City that fit one or more of the following categories:

1. Construction of new facilities or infrastructure.
2. Non-recurring rehabilitation or major repairs to a capital asset.
3. Acquisition of land for a public purpose.
4. All projects requiring debt obligation or borrowing.
5. Purchase of major equipment and vehicles meeting the threshold definition of a capital asset.
6. Any specific planning, engineering study or design work related to a project that falls in the above categories

The City's Capital Improvement Program serves as a useful budgeting and managing tool:

a. It allows the City to balance needed or desired capital investments with available financing, thereby receiving the optimum benefits for the available public revenue.
b. It allows the City to ensure a clear relationship between capital spending and government service delivery.
c. It allows the City to align its planning activity, programs, and operating resources with the capital improvement program and facilitate coordination between City departments.

d. It allows the City to take advantage of government, foundation, and other grant programs and leverage project-specific funding resources.
e. It provides for a logical process of assigning priorities to projects based on their overall importance to the City.
f. It allows other government sectors, the community and the private sector to anticipate when the City will undertake public improvements, and make decisions and plan investments accordingly.

Financing the Capital Budget

The City considers all forms of public financing when developing its CIP. These include:

General Obligation Bonds – Bonds are the primary source of funding by which capital projects are financed and are a long term debt instrument backed by the full faith and credit of the City and issued with the guarantee that the government will use its general taxing authority to pay principal and interest payments on the debt. Seabrook citizens must vote to approve the authorization to issue GO Bonds, and once authorized, the Bonds may only be used for project listed in propositions.

Revenue Bonds – Long term debt instrument secured by the revenues of the City's utilities. Revenue Bonds can only be issued for utility related capital projects and are issued with 5-20 year amortizations.

Government Loans and Grants – The City receives state grants and loans for various capital projects, including roads and community facilities.

Grants and Contributions – Funds contributed to a project via a project-specific grant program or by a local business or special interest group. This includes developer contributions, which are payments by developers for capital facilities that enhance their property.

Capital Impact Fees – A source of funding for Water and Wastewater projects only, these are user fees in the form of connection charges.

Community Development Block Grant (CDBG) Funds – Federal grant funds used primarily to facilitate the production and preservation of low and moderate income housing, but also utilized for capital projects that serve or benefit the City's low income population.

Operating Funds – Next to general obligation bonds, operating funds are the largest source of funding for capital projects. Transfer of funds from the operating to the capital budget for specific capital projects are noted in budget documents.

Role of the Comprehensive Plan in the Capital Improvement Program

The Seabrook Comprehensive Plan is the financially unconstrained long-range plan for the City. In accordance with Article XI, Section 11.24 of the Seabrook City Charter it identifies goals and policies for city land use, economic development, transportation, sensitive environmental resources, community facilities, including parks and recreation, and water resources. The Comprehensive Plan is recognized as a key component of the Capital Improvement Program because it assists in determining the strategic goals that the City aims to achieve over the long term via its program of capital investments. The link between the Comprehensive Plan, the Annual Strategic Plan and CIP is supported by various planning documents

and studies, including functional master plans that inventory and assess particular types of physical infrastructure, identify deficiencies, and prioritize needed investments.

- Encourage a More Economically Viable City
- Preserve Neighborhoods
- Enhance Seabrook's Sense of Community
- Maintain and Improve City Buildings and Infrastructure
- Implement a Safe and Efficient Transportation System
- Enhance the Recreation and Open Space System
- Maintain and Improve the Quality of Seabrook's natural and Manmade Environments
- Improve Public Safety
- Support Education at All Levels

Presentation Format

The sections which follow represent the capital improvement projects grouped category by schedule of funding and then in a table format that includes the funding possibilities and what those impacts could be to the citizen.

Additional capital needs anticipated over the long term are noted. Those potential projects may be included in the CIP in future years, depending on priorities, funding availability, and other considerations. They are included in this document to convey to City leaders and other interested parties the general parameters and breadth of upcoming capital needs.

Within each of the projects, they are further sorted into project stages. This allows like projects to be considered together, so as to determine overall City priorities and allow for resources to be allocated accordingly.

- Project Engineering/Planning/Design Stage: includes the development of the project scope, feasibility study, a design budget, and order of magnitude construction budget. It includes the development of any environmental documents, legal documents, construction plans and specifications, and a detailed construction budget.
- Land/Easement Acquisition: includes the surveying and negotiating phase of acquiring land and easements necessary for the completion of a project.
- Construction Stage: includes site preparation, utility and infrastructure placement, equipment installation, construction, and environmental mitigation.

Funds - Overview

The City considers all funds when developing its CIP. Sources of financing include operating funds, General Obligation Bonds, Revenue Bonds, government loans and grants, Community Development Block Grant (CDBG) funds, revenue from fees, and revenue from Capital Impact Fees. The capital projects presented in the CIP are grouped by the funds which support them – the General Fund and Enterprise Fund.

General Fund

Capital projects supported by the General Fund generally fall into the following categories:

- City Buildings/Facilities
- Information Technology systems and infrastructure
- Roadways, Sidewalks, and Infrastructure assets located in the public right of way
- Recreation Facilities and Parks
- Special projects addressing Economic Development, Revitalization, and Redevelopment

Capital Impact Fees Fund

The Capital Impact Fees Fund generates revenue through Water and Sewer Impact fees for funding or recouping the cost of capital improvements that have a life expectancy of five or more years, including water supply, treatment and distribution facilities and wastewater collection and treatment facilities, for new development in the city.

Capital projects supported by the Capital Impact Fees Fund generally include:

- Facility expansions, including construction, surveying and engineering, land acquisition
- Principal and interest on bonds, notes or other obligations issued by or on behalf of the city

Enterprise Fund

The Enterprise Fund supports capital projects related to the water distribution system and wastewater treatment plant. The fund's primary sources of revenue are user charges levied on water and sewer services.

The Enterprise Fund also supports the following: the Water, Sewer and Utility Billing Departments. The Enterprise fund is responsible for the end point transmission, testing, storage, and distribution of all potable water for customers of the City. The Water Department is responsible for meter reading and operating, maintaining and repairing the City's water distribution system, including service lines, water meters and fire hydrants. The Sewer Department is responsible for operating, maintaining and repairing the City's sewage conveyance system and pumping stations.

Future Projects

Projects below include those identified for a future long-term capital program. Many of these projects are subject to more careful scope definition and management review. These projects generally identified via area plans or other planning activity will be included in the capital budget in future years, depending on priorities, funding availability, and other considerations. They are listed in no particular order.

Project Name	*Budget Commitment would allow:*	*Year Proposed for Funding:*
SH 146 Corridor Hardscape, Landscape and Branding Project	Define Seabrook from surrounding communities and enhance natural	2018+

	elements	
Police Station	Flooding and surge protection of essential service department	2022+
CVE/DOT Substation under the Red Bluff Overpass	Public Safety site north of the new rail line	2018+
Trail: SH 146 Pedestrian Crossing	Safe connectivity between east and west trails	2018+
Trail: East Meyer Trail	Safe connectivity between east and west (SafeRoutes)	2017+
Trail: Trailhead at Old SH 146 and Red Bluff	Trail Enhancement	2017+
Trail: Centerpoint Trail System along SH 146 Corridor	Trail connectivity on the west side of SH 146	2018+
Back Bay Green Core	Sustaining a walkable and livable community in the Old Seabrook/Back Bay District	Ongoing
Boardwalk in Slough/Old Seabrook Area	Encourage pedestrian access to the Slough and Back Bay	2019+
Kayak Launches	Promote safe and secure launch areas for waterfront access	2018+
Boardwalk/Coastal Footpath along Clear Lake	Promote public access and connection to future waterfront developments	2022+
Park Irrigation System along Trails	Foster ongoing and future new tree growth	2017+

CIP PROJECTS 2017-22+

FULL CIP PROJECTS DESCRIPTIONS AND EXHIBITS

WATER PROJECTS			
CIP #	PROJECT DESCRIPTION		PROJECT COST
W1	TODVILLE ROAD 12-INCH WATER LINE	$	1,619,520
W2	SHIPYARDS WATER SERVICE PHASE 1	$	667,420
W3	SHIPYARDS WATER SERVICE PHASE 2	$	778,280
W4	HUMBLE DRIVE WATER PLANT RELOCATION	$	2,860,873
W5	TAYLOR LAKE WATER LINE CROSSING	$	2,065,000
W6	OLD SEABROOK WATER LINE IMPROVEMENTS	$	429,560
W7	STATE HIGHWAY 146 WATER LINE IMPROVEMENTS	$	2,608,731
W8	WATER PLANT BOOSTER PUMPS	$	540,000
W9	RED BLUFF 12-INCH WATER LINE	$	534,380
W10	PINE GULLY AREA WATER LINE IMPROVEMENTS	$	1,087,600
	TOTAL WATER PROJECTS	**$**	**13,191,364**

WASTEWATER PROJECTS			
CIP #	**PROJECT DESCRIPTION**	**PROJECT COST**	
WW1	EAST MEYER PIPE BURSTING	$	1,434,282
WW2	SHIPYARDS SEWER SERVICE PHASE 1	$	1,277,400
WW3	SHIPYARDS SEWER SERVICE PHASE 2	$	659,000
WW4	TODVILLE SEWER LINE REPLACEMENT	$	2,476,000
WW5	WASTEWATER TREATMENT PLANT UPGRADES PHASE 1		COMPLETE
WW6	WASTEWATER TREATMENT PLANT UPGRADES PHASE 2	$	1,406,090
WW7	RED BLUFF SANITARY SEWER EXTENSION	$	538,080
WW8	STATE HIGHWAY 146 SANITARY SEWER IMPROVEMENTS	$	2,272,632
WW9	PINE GULLY WASTEWATER TREATMENT PLANT PHASE 1A	$	4,439,520
WW10	PINE GULLY WASTEWATER TREATMENT PLANT PHASE 1B	$	3,690,000
WW11	PINE GULLY WASTEWATER TREATMENT PLANT PHASE 2	$	9,720,000
WW12	PINE GULLY WASTEWATER TREATMENT PLANT PHASE 3	$	14,383,500
WW13	PINE GULLY WASTEWATER TREATMENT PLANT PHASE 4	$	366,500

TOTAL WASTEWATER PROJECTS $ 42,663,004

DRAINAGE PROJECTS			
CIP #	**PROJECT DESCRIPTION**	**PROJECT COST**	
D1	TODVILLE ROAD BRIDGE	$	3,869,240
D2	EL MAR DITCH	$	4,377,800
D3	RED BLUFF ROAD DRAINAGE CHANNEL	$	10,240,625
D4	WILDLIFE PARK DRAINAGE EXPANSION	$	596,600
D5	BAYBROOK SECTION 1 - DRAINAGE IMPROVEMENTS	$	1,114,750
D6	LOWER PINE GULLY DRAINAGE IMPROVEMENTS	$	3,038,244
D7	HESTER'S GULLY DRAINAGE IMPROVEMENTS	$	623,330
D8	SURF OAKS DRIVE	$	281,600
	TOTAL DRAINAGE PROJECTS	**$**	**24,142,189**

STREET PROJECTS			
CIP #	**PROJECT DESCRIPTION**	**PROJECT COST**	
S1	BAYBROOK SECTION 1 - DELABROOK CT	$	254,019
S2	BAYBROOK SECTION 1 - CEDARBROOK CT	$	264,515
S3	BAYBROOK SECTION 1 - BROOKWOOD CT	$	271,753
S4	MIRAMAR STREETS - DOLPHIN DRIVE	$	697,083
S5	MIRAMAR STREETS - CAPRI LANE	$	690,643
S6	MIRAMAR STREETS - BIMINI WAY	$	696,123
S7	MIRAMAR STREETS - ASPEN LANE	$	701,283
S8	SEASCAPE II STREET IMPROVEMENTS	$	4,235,408
S9	BAYBROOK SECTION III STREET IMPROVEMENTS	$	3,783,300
	TOTAL STREET PROJECTS	**$**	**11,594,127**

FACILITY PROJECTS			
CIP #	**PROJECT DESCRIPTION**	**PROJECT COST**	
FAC1	SCADA SYSTEM UPGRADES	$	705,672
FAC2	CITY HALL PARKING LOT	$	178,421
FAC3	COMMUNITY CENTER PARKING LOT	$	459,429
FAC4	MIRAMAR PARK PARKING LOT	$	335,110
FAC5	SEABROOK SPORTS COMPLEX PARKING LOT	$	539,647
FAC6	SMART WATER METER CONVERSION	$	1,700,000
FAC7	FRIENDSHIP PARK WATER TANK REHABILITATION	$	655,000
FAC8	REPSDORPH WATER TANK REHABILITATION	$	714,000
FAC9	CHLORAMINE CONVERSION	$	189,060
	TOTAL FACILITY PROJECTS	**$**	**5,476,339**

PARK AND TRAIL PROJECTS			
CIP #	**PROJECT DESCRIPTION**	**PROJECT COST**	
P1	PINE GULLY HIKE AND BIKE TRAIL	$	542,300
P2	WILDWOOD PLAYGROUND REPLACEMENT	$	25,000
P3	MIRAMAR PLAYGROUND REPLACEMENT	$	50,000
P4	MEADOR PARK TRAIL LIGHTING	$	70,000
	TOTAL PARK PROJECTS	**$**	**687,300**

TOTAL WATER PROJECTS	**$**	**13,191,364**
TOTAL WASTEWATER PROJECTS	**$**	**42,663,004**
TOTAL DRAINAGE PROJECTS	**$**	**24,142,189**
TOTAL STREET PROJECTS	**$**	**11,594,127**
TOTAL FACILITY PROJECTS	**$**	**5,476,339**
TOTAL PARK AND TRAIL PROJECTS	**$**	**687,300**
TOTAL CAPITAL IMPROVEMENT PROJECTS	**$**	**97,754,323**

SEABROOK

CAPITAL IMPROVEMENT PROJECTS
FY17 – FY22+

July 2016

STATE OF TEXAS
BRAD S. MATLOCK
102246
LICENSED
PROFESSIONAL ENGINEER

7-1-16

Submitted By:

CobbFendley
TBPE Firm Registration No. 274 | TBPLS Firm Registration No. 100467

1920 Country Place Pkwy, Suite 310 | Pearland, Texas 77584 | 281.993.4952 | fax 713.993.8086 | www.cobbfendley.com

WATER PROJECTS			
CIP #	**PROJECT DESCRIPTION**	**PROJECT COST**	
W1	TODVILLE ROAD 12-INCH WATER LINE	$	1,619,520
W2	SHIPYARDS WATER SERVICE PHASE 1	$	667,420
W3	SHIPYARDS WATER SERVICE PHASE 2	$	778,280
W4	HUMBLE DRIVE WATER PLANT RELOCATION	$	2,860,873
W5	TAYLOR LAKE WATER LINE CROSSING	$	2,065,000
W6	OLD SEABROOK WATER LINE IMPROVEMENTS	$	429,560
W7	STATE HIGHWAY 146 WATER LINE IMPROVEMENTS	$	2,608,731
W8	WATER PLANT BOOSTER PUMPS	$	540,000
W9	RED BLUFF 12-INCH WATER LINE	$	534,380
W10	PINE GULLY AREA WATER LINE IMPROVEMENTS	$	1,087,600

TOTAL WATER PROJECTS	**$**	**13,191,364**

WASTEWATER PROJECTS			
CIP #	**PROJECT DESCRIPTION**	**PROJECT COST**	
WW1	EAST MEYER PIPE BURSTING	$	1,434,282
WW2	SHIPYARDS SEWER SERVICE PHASE 1	$	1,277,400
WW3	SHIPYARDS SEWER SERVICE PHASE 2	$	659,000
WW4	TODVILLE SEWER LINE REPLACEMENT	$	2,476,000
WW5	WASTEWATER TREATMENT PLANT UPGRADES PHASE 1		COMPLETE
WW6	WASTEWATER TREATMENT PLANT UPGRADES PHASE 2	$	1,406,090
WW7	RED BLUFF SANITARY SEWER EXTENSION	$	538,080

WW8	STATE HIGHWAY 146 SANITARY SEWER IMPROVEMENTS	$	2,272,632
WW9	PINE GULLY WASTEWATER TREATMENT PLANT PHASE 1A	$	4,439,520
WW10	PINE GULLY WASTEWATER TREATMENT PLANT PHASE 1B	$	3,690,000
WW11	PINE GULLY WASTEWATER TREATMENT PLANT PHASE 2	$	9,720,000
WW12	PINE GULLY WASTEWATER TREATMENT PLANT PHASE 3	$	14,383,500
WW13	PINE GULLY WASTEWATER TREATMENT PLANT PHASE 4	$	366,500

TOTAL WASTEWATER PROJECTS	**$**	**42,663,004**

DRAINAGE PROJECTS

CIP #	PROJECT DESCRIPTION		PROJECT COST
D1	TODVILLE ROAD BRIDGE	$	3,869,240
D2	EL MAR DITCH	$	4,377,800
D3	RED BLUFF ROAD DRAINAGE CHANNEL	$	10,240,625
D4	WILDLIFE PARK DRAINAGE EXPANSION	$	596,600
D5	BAYBROOK SECTION 1 - DRAINAGE IMPROVEMENTS	$	1,114,750
D6	LOWER PINE GULLY DRAINAGE IMPROVEMENTS	$	3,038,244
D7	HESTER'S GULLY DRAINAGE IMPROVEMENTS	$	623,330
D8	SURF OAKS DRIVE	$	281,600
	TOTAL DRAINAGE PROJECTS	**$**	**24,142,189**

STREET PROJECTS			
CIP #	**PROJECT DESCRIPTION**	**PROJECT COST**	
S1	BAYBROOK SECTION 1 - DELABROOK CT	$	254,019
S2	BAYBROOK SECTION 1 - CEDARBROOK CT	$	264,515
S3	BAYBROOK SECTION 1 - BROOKWOOD CT	$	271,753
S4	MIRAMAR STREETS - DOLPHIN DRIVE	$	697,083
S5	MIRAMAR STREETS - CAPRI LANE	$	690,643
S6	MIRAMAR STREETS - BIMINI WAY	$	696,123
S7	MIRAMAR STREETS - ASPEN LANE	$	701,283
S8	SEASCAPE II STREET IMPROVEMENTS	$	4,235,408
S9	BAYBROOK SECTION III STREET IMPROVEMENTS	$	3,783,300
	TOTAL STREET PROJECTS	**$**	**11,594,127**

FACILITY PROJECTS			
CIP #	**PROJECT DESCRIPTION**		**PROJECT COST**
FAC1	SCADA SYSTEM UPGRADES	$	705,672
FAC2	CITY HALL PARKING LOT	$	178,421
FAC3	COMMUNITY CENTER PARKING LOT	$	459,429
FAC4	MIRAMAR PARK PARKING LOT	$	335,110
FAC5	SEABROOK SPORTS COMPLEX PARKING LOT	$	539,647
FAC6	SMART WATER METER CONVERSION	$	1,700,000
FAC7	FRIENDSHIP PARK WATER TANK REHABILITATION	$	655,000
FAC8	REPSDORPH WATER TANK REHABILITATION	$	714,000
FAC9	CHLORAMINE CONVERSION	$	189,060
	TOTAL FACILITY PROJECTS	**$**	**5,476,339**

PARK PROJECTS			
CIP #	**PROJECT DESCRIPTION**		**PROJECT COST**
P1	PINE GULLY HIKE AND BIKE TRAIL	$	542,300
	TOTAL PARK PROJECTS	**$**	**542,300**

TOTAL WATER PROJECTS	**$**	**13,191,364**
TOTAL WASTEWATER PROJECTS	**$**	**42,663,004**
TOTAL DRAINAGE PROJECTS	**$**	**24,142,189**
TOTAL STREET PROJECTS	**$**	**11,594,127**
TOTAL FACILITY PROJECTS	**$**	**5,476,339**
TOTAL PARK PROJECTS	**$**	**542,300**
TOTAL CAPITAL IMPROVEMENT PROJECTS	**$**	**97,609,323**

Seabrook Capital Improvement Projects
FY17-FY22+
July 2016

CIP #	PROJECT DESCRIPTION	SOURCE	PROJECT COST							
			PREVIOUS	FY17	FY18	FY19	FY20	FY21	FY22+	TOTAL
	WATER PROJECTS									
W1	TODVILLE ROAD 12-INCH WATER LINE	TBD	$ -	$ -	$ 225,000	$ 1,394,520	$ -	$ -	$ -	$ 1,619,520
W2	SHIPYARDS WATER SERVICE PHASE 1	TBD	$ -	$ -	$ -	$ 98,500	$ 568,920	$ -	$ -	$ 667,420
W3	SHIPYARDS WATER SERVICE PHASE 2	TBD	$ -	$ -	$ -	$ 110,000	$ 668,280	$ -	$ -	$ 778,280
W4	HUMBLE DRIVE WATER PLANT RELOCATION	Cert Oblig	$ 275,000	$ 1,049,278	$ 1,536,595	$ -	$ -	$ -	$ -	$ 2,860,873
W5	TAYLOR LAKE WATER LINE CROSSING	TBD	$ -	$ -	$ -	$ -	$ -	$ -	$ 2,065,000	$ 2,065,000
W6	OLD SEABROOK WATER LINE IMPROVEMENTS	Impact Fees	$ -	$ -	$ 35,000	$ 394,560	$ -	$ -	$ -	$ 429,560
W7	STATE HIGHWAY 146 WATER LINE IMPROVEMENTS	SIB	$ -	$ 171,351	$ 133,273	$ 785,213	$ 1,095,803	$ 423,090	$ -	$ 2,608,731
W8	WATER PLANT BOOSTER PUMPS	TBD	$ -	$ -	$ -	$ -	$ 540,000	$ -	$ -	$ 540,000
W9	RED BLUFF 12-INCH WATER LINE	TBD	$ -	$ -	$ -	$ 534,380	$ -	$ -	$ -	$ 534,380
W10	PINE GULLY AREA WATER LINE IMPROVEMENTS	Impact Fees	$ -	$ -	$ -	$ -	$ -	$ 1,087,600	$ -	$ 1,087,600
	TOTAL WATER PROJECTS		**$ 275,000**	**$ 1,220,629**	**$ 1,929,868**	**$ 3,317,173**	**$ 2,873,003**	**$ 1,510,690**	**$ 2,065,000**	**$ 13,191,364**
	WASTEWATER PROJECTS									
WW1	EAST MEYER PIPE BURSTING	HOLD**	$ 73,969	$ 1,360,313	$ -	$ -	$ -	$ -	$ -	$ 1,434,282
WW2	SHIPYARDS SEWER SERVICE PHASE 1	TBD	$ -	$ -	$ 1,277,400	$ -	$ -	$ -	$ -	$ 1,277,400
WW3	SHIPYARDS SEWER SERVICE PHASE 2	TBD	$ -	$ -	$ -	$ -	$ -	$ -	$ 659,000	$ 659,000
WW4	TODVILLE SEWER LINE REPLACEMENT	Cert Oblig	$ -	$ 376,000	$ 2,100,000	$ -	$ -	$ -	$ -	$ 2,476,000
WW5	WASTEWATER TREATMENT PLANT UPGRADES PHASE 1	COMPLETE	$ -	$ -	$ -	$ -	$ -	$ -	$ -	COMPLETE
WW6	WASTEWATER TREATMENT PLANT UPGRADES PHASE 2	Cert Oblig	$ -	$ 214,490	$ 238,320	$ 953,280	$ -	$ -	$ -	$ 1,406,090
WW7	RED BLUFF SANITARY SEWER EXTENSION	Impact Fees	$ -	$ -	$ 538,080	$ -	$ -	$ -	$ -	$ 538,080
WW8	STATE HIGHWAY 146 SANITARY SEWER IMPROVEMENTS	SIB	$ -	$ 148,280	$ 115,329	$ 694,637	$ 948,261	$ 366,124	$ -	$ 2,272,632
WW9	PINE GULLY WASTEWATER TREATMENT PLANT PHASE 1A	Decision?	$ -	$ -	$ 369,960	$ 1,479,840	$ 2,589,720	$ -	$ -	$ 4,439,520
WW10	PINE GULLY WASTEWATER TREATMENT PLANT PHASE 1B	Restore Act	$ -	$ -	$ -	$ -	$ -	$ 307,500	$ 3,382,500	$ 3,690,000
WW1	PINE GULLY WASTEWATER TREATMENT PLANT PHASE 2	Restore Act	$ -	$ -	$ -	$ -	$ -	$ -	$ 9,720,000	$ 9,720,000
WW12	PINE GULLY WASTEWATER TREATMENT PLANT PHASE 3	Restore Act	$ -	$ -	$ -	$ -	$ -	$ -	$ 14,383,500	$ 14,383,500
WW13	PINE GULLY WASTEWATER TREATMENT PLANT PHASE 4	Restore Act	$ -	$ -	$ -	$ -	$ -	$ -	$ 366,500	$ 366,500
	TOTAL WASTEWATER PROJECTS		**$ 73,969**	**$ 2,099,083**	**$ 4,639,089**	**$ 3,127,757**	**$ 3,537,981**	**$ 673,624**	**$ 28,511,500**	**$ 42,663,004**
	DRAINAGE PROJECTS									
D1	TODVILLE ROAD BRIDGE	Restore Act	$ -	$ 575,000	$ 3,294,240	$ -	$ -	$ -	$ -	$ 3,869,240
D2	EL MAR DITCH	TBD	$ -	$ -	$ -	$ -	$ -	$ 600,000	$ 3,777,800	$ 4,377,800
D3	RED BLUFF ROAD DRAINAGE CHANNEL	TBD	$ -	$ -	$ -	$ -	$ -	$ -	$ 10,240,625	$ 10,240,625
D4	WILDLIFE PARK DRAINAGE EXPANSION	TBD	$ -	$ -	$ 89,000	$ 507,600	$ -	$ -	$ -	$ 596,600
D5	BAYBROOK SECTION 1 - DRAINAGE IMPROVEMENTS	TBD	$ -	$ -	$ -	$ 1,114,750	$ -	$ -	$ -	$ 1,114,750
D6	LOWER PINE GULLY DRAINAGE IMPROVEMENTS	TBD	$ -	$ -	$ -	$ -	$ 679,000	$ 2,359,244	$ -	$ 3,038,244
D7	HESTER'S GULLY DRAINAGE IMPROVEMENTS	GLO Grant	$ 451,400	$ 171,930	$ -	$ -	$ -	$ -	$ -	$ 623,330
D8	SURF OAKS DRIVE	TBD	$ -	$ -	$ -	$ -	$ -	$ -	$ 281,600	$ 281,600
	TOTAL DRAINAGE PROJECTS		**$ 451,400**	**$ 746,930**	**$ 3,383,240**	**$ 1,622,350**	**$ 679,000**	**$ 2,959,244**	**$ 14,300,025**	**$ 24,142,189**
	STREET PROJECTS									
S1	BAYBROOK SECTION 1 - DELABROOK CT	Sanit Franch	$ 254,019	$ -	$ -	$ -	$ -	$ -	$ -	$ 254,019
S2	BAYBROOK SECTION 1 - CEDARBROOK CT	Sanit Franch	$ -	$ 264,515	$ -	$ -	$ -	$ -	$ -	$ 264,515
S3	BAYBROOK SECTION 1 - BROOKWOOD CT	Sanit Franch	$ -	$ -	$ 271,753	$ -	$ -	$ -	$ -	$ 271,753
S4	MIRAMAR STREETS - DOLPHIN DRIVE	Sanit Franch	$ -	$ -	$ -	$ -	$ -	$ -	$ 697,083	$ 697,083
S5	MIRAMAR STREETS - CAPRI LANE	Sanit Franch	$ -	$ -	$ -	$ -	$ -	$ -	$ 690,643	$ 690,643
S6	MIRAMAR STREETS - BIMINI WAY	Sanit Franch	$ -	$ -	$ -	$ -	$ -	$ -	$ 696,123	$ 696,123
S7	MIRAMAR STREETS - ASPEN LANE	Sanit Franch	$ -	$ -	$ -	$ -	$ -	$ -	$ 701,283	$ 701,283
S8	SEASCAPE II STREET IMPROVEMENTS	Franch/TBD	$ -	$ -	$ -	$ 2,440,744	$ 1,794,664	$ -	$ -	$ 4,235,408
S9	BAYBROOK SECTION III STREET IMPROVEMENTS	Franch/TBD	$ -	$ -	$ -	$ -	$ 1,378,660	$ 2,404,640	$ -	$ 3,783,300
	TOTAL STREET PROJECTS		**$ 254,019**	**$ 264,515**	**$ 271,753**	**$ 2,440,744**	**$ 3,173,324**	**$ 2,404,640**	**$ 2,785,132**	**$ 11,594,127**
	FACILITY PROJECTS									
FAC1	SCADA SYSTEM UPGRADES	Water Board	$ -	$ 235,224	$ 235,224	$ 235,224	$ -	$ -	$ -	$ 705,672
FAC2	CITY HALL PARKING LOT	TBD	$ -	$ -	$ 178,421	$ -	$ -	$ -	$ -	$ 178,421
FAC3	COMMUNITY CENTER PARKING LOT	TBD	$ -	$ -	$ -	$ -	$ -	$ -	$ 459,429	$ 459,429
FAC4	MIRAMAR PARK PARKING LOT	TBD	$ -	$ -	$ 335,110	$ -	$ -	$ -	$ -	$ 335,110
FAC5	SEABROOK SPORTS COMPLEX PARKING LOT	TBD	$ -	$ -	$ 539,647	$ -	$ -	$ -	$ -	$ 539,647
FAC6	SMART WATER METER CONVERSION	TBD	$ -	$ -	$ 1,700,000	$ -	$ -	$ -	$ -	$ 1,700,000
FAC7	FRIENDSHIP PARK WATER TANK REHABILITATION	Cert Oblig	$ -	$ -	$ -	$ -	$ 655,000	$ -	$ -	$ 655,000
FAC8	REPSDORPH WATER TANK REHABILITATION	Cert Oblig	$ -	$ -	$ 714,000	$ -	$ -	$ -	$ -	$ 714,000
FAC9	CHLORAMINE CONVERSION	GF Budget	$ -	$ 94,530	$ 94,530	$ -	$ -	$ -	$ -	$ 189,060
	TOTAL FACILITY PROJECTS		**$ -**	**$ 329,754**	**$ 3,796,932**	**$ 235,224**	**$ 655,000**	**$ -**	**$ 459,429**	**$ 5,476,339**
	PARK AND TRAIL PROJECTS									
P1	PINE GULLY HIKE AND BIKE TRAIL	New Grant	$ -	$ -	$ -	$ -	$ -	$ -	$ 542,300	$ 542,300
P2	WILDWOOD PLAYGROUND REPLACEMENT	Park Impact		$ 25,000						
P3	MIRAMAR PLAYGROUND REPLACEMENT	Park Impact			50,000					
P4	MEADOR PARK TRAIL LIGHTING	Park Impact			70,000					
	TOTAL PARK PROJECTS		**$ -**	**$ -**	**$ 120,000**	**$ -**	**$ -**	**$ -**	**$ 542,300**	**$ 542,300**
	TOTAL COST PER YEAR		**$ 1,054,388**	**$ 4,685,911**	**$ 14,140,882**	**$ 10,743,248**	**$ 10,918,308**	**$ 7,548,198**	**$ 48,663,386**	**$ 97,754,323**

ACTION ITEM CHECK LIST STATUS

#		STATUS	DATE ASSIGNED	NEXT REVIEW DATE	PROPOSED CLOSURE DATE	RESPONSIBLE ORGANIZATION	City Council RESPONSIBILITY	PLANNING OBJECTIVE #	AGENDA ITEM NUMBER	DESCRIPTION OF ACTION ITEM	STATUS AND DATE
23		OPEN/IN WORK	11/4/2014			Mayor/ City Mgr.			5.1	Provide periodic updates on TxDOT's progress to improve/widen SH 146.	
30		OPEN/IN WORK	11/18/2014			Staff			4.2	Provide periodic updates of Strategic Plan	
32		OPEN/IN WORK	2/17/2015			Staff			6.1	Provide periodic project updates	

July 2016

Sun	Mon	Tue	Wed	Thu	Fri	Sat
					1	2
3	4 **4th of July Kids Parade** **City Hall Closed**	5 **Regular Council Meeting 7:00 pm**	6	7 **Open Space & Trails 5:00 pm**	8	9
10	11 **Budget Review Meeting 6:00 pm**	12 Swim Lessons Second Session **Budget review meeting, if needed 6:00 pm**	13 **Budget Review Meeting, if needed 6:00 pm**	14 **EDC 7:00 pm**	15	16 **Swim n Movie night—Goonies**
17	18	19 **Regular Council Meeting 7:00 pm**	20	21 **P&Z 7:00 pm**	22	23
24	25	26	27	28	29	30
31						

August 2016

Sun	Mon	Tue	Wed	Thu	Fri	Sat
	1	2 **Regular Council Meeting 7:00 pm**	3	4 **Open Space & Trails 5:00 pm**	5	6
7	8	9	10	11 **EDC 7:00 pm**	12	13
14	15	16 **Regular Council Meeting 7:00 pm**	17	18 **P&Z 7:00 pm**	19	20
21	22	23	24	25	26	27
28	29	30	31			