SEABROOK

CONTRACT DOCUMENTS AND TECHNICAL SPECIFICATIONS FOR WATER PLANT RELOCATION

CFA PROJECT NO. 1112-001-15
CITY OF SEABROOK PROJECT NO. 2016-11

AUGUST 2016

8/17/16

STATE OF TEXAS
AMBER R. HURD
94679
LICENSED
PROFESSIONAL ENGINEER

CobbFendley

TBPE Firm Registration No. 274 | TBPLS Firm Registration No. 100467

Construction Management ▪ Geographic Information Systems ▪ Hydraulics and Hydrology ▪ Land Development
Public Works ▪ Right-of-Way Acquisition ▪ Site Development ▪ Subsurface Utility Engineering
Surveying ▪ Telecommunications ▪ Transportation ▪ Utility Coordination and Design

1920 Country Place Parkway, Ste. 310 | Pearland, Texas 77584 | 281.993.4952 | fax 281.993.8086 | www.cobbfendley.com

ADDENDUM NO. 1
DATED SEPTEMBER 6, 2016

CONSTRUCTION DOCUMENTS AND
TECHNICAL SPECIFICATIONS FOR
THE CONSTRUCTION OF THE
SEABROOK WATER PLANT RELOCATION

CITY OF SEABROOK PROJECT NO. 2016-11

The attention of all prospective Bidders is directed to the following modifications to Drawings, Specifications, and Contract Documents for the above-referenced project. The information contained in this Addendum supersedes information contained in the Drawings, Specifications, and Contract Documents to the extent indicated. All information contained in the Drawings, Specifications, and Contract Documents remains in full force and effect unless specifically modified herein.

CONTRACT DOCUMENTS:

SPECIFICATIONS:

16496 – Specification 16496 – Automatic Transfer Switch is now included.

DRAWINGS:

Sheet 17 of 35

1) Ground Storage Tank Foundation Detail has been revised to "Excavate and replace with select fill per geotechnical report"

CLARIFICATIONS:

This section is intended to clarify or provide additional information and does not supersede the Contract Documents and Construction Plan Sheet.

1) Q – The drawings note the GST drain is to be a flush type per API-650, but show a 4" min. dimension from the floor to the bottom of the opening (sheet 15 of 35). An API-650 flush opening is flush with the bottom plate, and will require prefabrication in the shell plate and stress relieving the same as the 48" flush manway (anything over 12" diameter must be stress relieved per D100). Please clarify if a flush drain opening is required, or simply a flanged shell opening.
A – Provide 4 inches between the bottom of the drain line and the tank floor, with a flanged shell opening.

2) Q – Please clarify. The Water Plant #1 MCC is shown in Bid Item #7 and Bid Item #12. Is Bid Item #7 for the MCC cost and Bid Item #12 for the Installation cost?
A – Yes. Use Item #7 for the MCC cost and Item #12 for Installation

3) Q – What bid item does the piping in the Booster Pump Station go in? Suction, discharge and drain lines.
A – Item #22 include suction, discharge and booster pump piping, Item #19 includes drain lines

4) Q – What is the scale for the electrical drawings?
A – Scales are: Sheet 22 1"=5', Sheet 24 1"=10', Sheet 25 1"=2' (use structural drawings for exact dimensions inside of the building)

5) Q - Specification for floor drains and drain pipe for Booster Pump Building?
A - Floor drains shall be Watts FD-100-A or equal. Drain piping shall be AWWA C900 PVC pipe per Section 02506.

6) Q - Specification for eye wash and shower station?
A - Provide a Guardian G1902P Safety Shower with Eyewash Station, or equal.

7) Q – Can you clarify WP-520 2.0a third paragraph and 8.0c.
A - Section 2.0.a.2 is referring to the first horizontal joint after a piping section has gone below grade.

From 2.0.a: Flanged joints shall be used for the suction and discharge header, all above ground piping and also for the first horizontal joint after a piping section has gone below grade.

Section 8.0 is saying in general no flanged joints are allowed below grade. The only exception is 2.0.a.

8) Q – What are the wage rates associated with this project
A – There are no specific wage rates for this project

9) Q – Who is the Owner's preferred SCADA System contractor?
A – The City's preferred Scada vendor is Fitch Services Inc., Attn: Ray Fitch, PO Box 278, Cypress TX 77410, (832) 467-0926

10) Q – Are the salvaged ATSs to be reinstalled at the new locations or are new ones to be provided?
A – New ATSs are to be provided by the contractor. The salvaged ATSs shall be turned over to the owner.

11) Q – For the Water Plant #1 service of parallel 350MCM outdoor CT's on a single concrete pole can be used in lieu of the two pole structure/bus weather head setup shown on the drawings saving several thousand dollars. Will this be acceptable?

A – Please bid the project per plans and specifications. Cost savings and changes will be discussed after award.

12) Q – Drawing Sheet 8 has conflicting notes about the fence height.
A – At Water Plant No. 2, provide an 8-foot tall chain link fence with PVC privacy slats. At Water Plant No. 1, provide an 8-foot tall architectural CMU block fence.

13) Q – The existing fire hydrant along Humble Road may be in conflict with the proposed Water Plant No. 1 driveway.
A – The proposed driveway is a temporary crushed concrete rock installation. It may be field adjusted if necessary.

Please note receipt of this addendum by inserting its number in the Proposal and Document 00300 – Bid Form. **FAILURE TO DO SO MAY SUBJECT BIDDER TO DISQUALIFICATION.**

Direct any questions concerning this Addendum to Cobb, Fendley & Associates Inc. to Amber Hurd at (713) 462-3242.

END OF ADDENDUM NO.1

APPROVED FOR ISSUE: _____
By Cobb, Fendley & Associates, Inc.
Firm No. 274

STATE OF TEXAS
AMBER R. HURD
94679
LICENSED
PROFESSIONAL ENGINEER
9/6/16

END OF DOCUMENT

1.0 GENERAL

1.1 SUMMARY

a. Section Includes:

1. Delayed transition automatic transfer switches to automatically transfer between normal and standby power sources.

1.2 REFERENCES

a. National Fire Protection Association (NFPA)

1. NFPA 70 - National Electrical Code (NEC)

b. National Electrical Manufacturer's Association (NEMA)

1. NEMA ICS 2-447- AC Automatic Transfer Switches

c. Underwriters Laboratories (UL)

1. UL 1008 - Standard for Automatic Transfer Switches

1.3 SUBMITTALS

a. Manufacturer shall submit shop drawings for review, which shall include the following, as a minimum:

1. Descriptive literature

2. Plan, elevation, side, and front view arrangement drawings, including overall dimension, weights and clearances, as well as mounting or anchoring requirements and conduit entrance locations.

3. Schematic diagrams.

4. Wiring diagrams.

5. Accessory list.

2.0 PRODUCTS

2.1 ACCEPTABLE MANUFACTURERS

a. Zenith

b. ASCO

c. Onan

d. Lexington

e. Pre-approved equal

2.2 CONSTRUCTION

a. General

1. The delayed transition automatic transfer switch shall be furnished as shown on the drawings. Voltage and continuous current ratings and number of poles shall be as shown. Switches shall be UL listed in accordance with UL-1008.

2. On 3 phase, 4 wire systems, utilizing ground fault protection, a true 4 pole switch shall be supplied with all four poles mounted on a common shaft. The continuous current rating and the closing and withstand rating of the fourth pole shall be identical to the rating of the main poles.

3. The transfer switch shall be mounted in a NEMA 1 enclosure, for indoors and NEMA 4X S.S. for outdoors, unless otherwise indicated. Enclosures shall be fabricated from 12 gauge steel. The enclosure shall be sized to exceed minimum wire bending space required by UL 1008. Outdoor enclosures shall have no exposed controls.

4. The transfer switch shall be equipped with an internal welded steel pocket, housing an operations and maintenance manual.

5. The transfer switch shall be top and bottom accessible.

6. The main contacts shall be capable of being replaced without removing the main power cables.

7. The main contacts shall be visible for inspection without any major disassembly of the transfer switch.

8. All bolted bus connections shall have Belleville compression type washers.

9. When a solid neutral is required, a fully rated bus bar with required AL-CU neutral lugs shall be provided.

10. Control components and wiring shall be front accessible. All control wires shall be multiconductor 18 gauge 600 volt SIS switchboard type point to point harness. All control wire terminations shall be identified with tubular sleeve-type markers.

11. The switch shall be equipped with 90 degrees C rated copper/aluminum solderless mechanical type lugs.

12. The complete transfer switch assembly shall be factory tested to ensure proper operation and compliance with the specification requirements. A copy of the factory test report shall be available upon request.

b. Automatic Transfer Switch

1. The transfer switch shall be double throw, actuated by two electric operators momentarily energized, and connected to the transfer mechanism by a simple over center type linkage. Minimum transfer time shall be 400 milliseconds.

2. The normal and emergency contacts shall be positively interlocked mechanically and electrically to prevent simultaneous closing. Main contacts shall be mechanically locked in both the normal and emergency positions without the use of hooks, latches, magnets, or springs, and shall be silver-tungston alloy. Separate arcing contacts with magnetic blowouts shall be provided on all transfer switches. Interlocked, molded case circuit breakers or contactors are not acceptable unless specifically shown on plans.

c. Automatic Transfer Switch Controls

1. The transfer switch shall be equipped with a microprocessor based control system, to provide all the operational functions of the automatic transfer switch. The controller shall have two asynchronous serial ports. The controller shall have a real time clock with Nicad battery back-up.

2. The CPU shall be equipped with self diagnostics which perform periodic checks of the memory I/O and communication circuits, with a watchdog/power fail circuit

3. The controller shall use industry standard open architecture communication protocol for high speed serial communications via multidrop connection to other controllers and to a master terminal with up to 4000 ft of cable, or further, with the addition of a communication repeater. The serial communication port shall be RS422/485 compatible.

4. The serial communication port shall allow interface to either the manufacturer's or the owner's furnished remote supervisory control.

5. The controller shall have password protection required to limit access to qualified and authorized personnel.

6. The controller shall include a 20 character, LCD display, with a keypad, which allows access to the system.

7. The controller shall include three phase over/under voltage, over/under frequency, phase sequence detection and phase differential monitoring on both normal and emergency sources.

8. The controller shall be capable of storing the following records in memory for access either locally or remotely:

   (a) Number of hours transfer switch is in the emergency position (total since record reset).
   (b) Number of hours emergency power is available (total since record reset).
   (c) Total transfer in either direction (total since record reset).
   (d) Date, time, and description of the last four source failures.
   (e) Date of the last exercise period.
   (f) Date of record reset.

d. Sequence of Operation

1. When the voltage on any phase of the normal source drops below 80% or increases to 120%, or frequency drops below 90%, or increase to 110%, or 20% voltage differential between phases occurs, after a programmable time delay period of 0-9999 seconds factory set at 3 seconds to allow for momentary dips, the engine starting contacts shall close to start the generating plant.

2. The transfer switch shall transfer to emergency when the generating plant has reached specified voltage and frequency on all phases.

3. After restoration of normal power on all phases to a preset value of at least 90% to 110% of rated voltage, and at least 95% to 105% of rated frequency, and voltage differential is below 20%, an adjustable time delay period of 0-9999 seconds (factory set at 300 seconds) shall delay retransfer to allow stabilization of normal power. If the emergency power source should fail during this time delay period, the switch shall automatically return to the normal source.

4. After retransfer to normal, the engine generator shall be allowed to operate at no load for a programmable period of 0-9999 seconds, factory set at 300 seconds.

e. Automatic Transfer Switch Accessories

1. Programmable three phase sensing of the normal source set to pickup at 90% and dropout at 80% of rated voltage and overvoltage to pickup at 120% and dropout out at 110% of rated voltage. Programmable frequency pickup at 95% and dropout at 90% and over frequency to pickup at 110% and dropout at 105% of rated frequency. Programmable voltage differential between phases, set at 20%, and phase sequence monitoring.

2. Programmable three phase sensing of the normal source set to pickup at 90% and dropout at 80% of rated voltage and overvoltage to pickup at 120% and dropout out at 110% of rated voltage programmable frequency pickup at 95% and dropout at 90% and over frequency to pickup at 110% and dropout at 105% of rated frequency. Programmable voltage differential between phases set at 20%, and phase sequence monitoring.

3. Time delay for override of momentary normal source power outages (delays engine start signal and transfer switch operation). Programmable 0-9999 seconds. Factory set at 3 seconds, if not otherwise specified.

4. Time delay to control contact transition time on transfer to either source. Programmable 0-9999 seconds, factory set at 10 seconds.

5. Time delay on retransfer to normal, programmable 0-9999 seconds, factory set at 300 seconds if not otherwise specified, with overrun to provide programmable 0-9999 second time delay, factory set at 300 seconds, unloaded engine operation after retransfer to normal.

6. Time delay on transfer to emergency, programmable 0-9999 seconds, factory set at 10 seconds.

7. A maintained type load test switch shall be included to simulate a normal power failure, keypad initiated.

8. A remote type load test switch shall be included to simulate a normal power failure, remote switch initiated.

9. A time delay bypass on retransfer to normal shall be included. Keypad initiated.

10. Contact, rated 10 Amps 30 volts DC, to close on failure of normal source to initiate engine starting.

11. Contact, rated 10 Amps 30 volts DC, to open on failure of normal source for customer functions.

12. Light emitting diodes shall be mounted on the microprocessor panel to indicate: switch is in normal position, switch is in emergency position and controller is running.

13. A plant exerciser shall be provided with (10) 7 day events, programmable for any day of the week and (24) calendar events, programmable for any month/day, to automatically exercise generating plant programmable in one minute increments. Also include selection of either "no load" (switch will <u>not</u> transfer) or "load" (switch will transfer) exercise period. Keypad initiated.

14. Provision to select either "no commit" or "commit" to transfer operation in the event of a normal power failure shall be included. In the "no commit position," the load will transfer to the emergency position unless normal power returns before the emergency source has reach 90% of it's rated values (switch will remain in normal). In the "commit position" the load will transfer to the emergency position after any normal power failure. Keypad initiated.

15. Two auxiliary contacts rated 10 Amp, 120 volts AC (for switches 100 to 800 amps) 15 amp, 120 volts AC (for switches 1000 to 4000 amps), shall be mounted on the main shaft, one closed on normal, the other closed on emergency. Both contacts will be wired to a terminal strip for ease of customer connections.

16. A three phase digital LCD voltage readout, with 1% accuracy shall display all three separate phase to phase voltages simultaneously, for both the normal and emergency source.

17. A digital LCD frequency readout with 1% accuracy shall display frequency for both normal and emergency source.

18. An LCD readout shall display normal source and emergency source availability.

19. Contacts for "Transfer Impending", adjustable 0-120 SEC.

f. Ratings

1. Delayed transition automatic transfer switches shall have the following 3 cycle short circuit closing and withstand as follows:

RMS Symmetrical Amperes 480 VAC

Amperes	Closing and Withstand	Current Limiting Fuse Rating
100-400	42,000	200,000
600-800	65,000	200,000
1000-1200	85,000	200,000
1600-4000	100,000	200,000

2. During the 3 cycle closing and withstand tests, there shall be no contact welding or damage. The 3 cycle tests shall be performed without the use of current limiting fuses. The test shall verify that contacts separation has not occurred, and there is contact continuity across all phases. Test procedures shall be in accordance with UL-1008, and testing shall be certified by Underwriters' Laboratories, Inc.

3. When conducting temperature rise tests to UL-1008, the manufacture shall include post-endurance temperature rise tests to verify the ability of the transfer switch to carry full rated current after completing the overload and endurance tests.

4. The microprocessor controller shall meet the following requirements:

- Storage conditions - 25 degrees C to 85 degrees C
- Operation conditions - 20 degrees C to 70 degrees C ambient
- Humidity 0 to 99% relative humidity, noncondensing
- Capable of withstanding infinite power interruptions
- Surge withstand per ANSI/IEEE C-37.90A-1978

5. Manufacturer shall provide copies of test reports upon request.

g. Manufacturer

1. The transfer switch manufacturer shall employ a nationwide factory-direct, field service organization, available on a 24-hour a day, 365 days a year, call basis.
2. The manufacture shall include an 800 telephone number, for field service contact, affixed to each enclosure.
3. The manufacturer shall maintain records of each transfer switch, by serial number, for a minimum 20 years.

h. Warranty

1. Provide 5 year standard manufacturer's warranty consisting of 2 years parts and labor, and an additional 3 years of replacement parts. Warranty shall be "on site" and warranty service shall be available by the factory service department on an emergency basis if required. Depot or non site warranties are not acceptable.

3.0 EXECUTION

3.1 INSTALLATION

a. Automatic Transfer Switches shall be provided with adequate lifting means for ease of installation of wall or floor mounted enclosures.

b. Provide access and working space as indicated or as required.

3.2 ADJUSTMENTS

a. Tighten assembled bolted connections with appropriate tools to manufacturer's torque recommendations prior to first energization.

3.3 START-UP AND TESTING

a. Provide the services of a factory representative to check-out, test, and start-up the automatic transfer switch in conjunction with the standby generator. Fully function test the automatic transfer switch to verify proper operation.

- - o 0 o - -

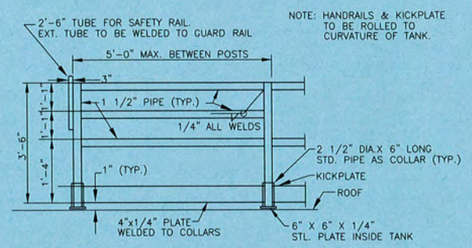

DETAIL OF GUARD RAIL

N.T.S.

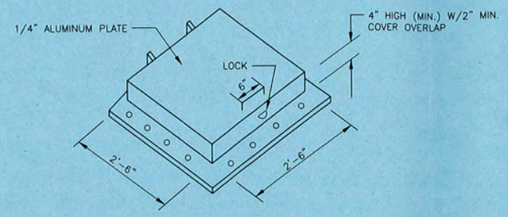

ROOF HATCH

N.T.S.

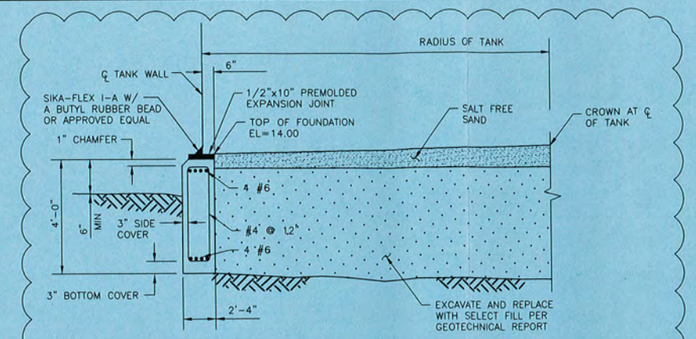

GROUND STORAGE TANK FOUNDATION

N.T.S.

NOTES:

1. EXCAVATE AND REMOVE A MINIMUM OF THREE FEET OF EXISTING SUBGRADE SOILS BENEATH THE TANK UNTIL COMPETENT SOIL IS LOCATED. LIMITS OF EXCAVATION SHALL EXTEND HORIZONTALLY FIVE FEET BEYOND THE EDGE OF THE PROPOSED TANK FOUNDATION. SELECT FILL SHALL BE NON-ACTIVE INORGANIC UNIFORM SANDY LEAN CLAY WITH A MAXIMUM LIQUID LIMIT OF 35, PLASTICITY INDEX BETWEEN 7 AND 20, AND NOT MORE THAN 50 PERCENT RETAINED ON THE NO. 200 SIEVE. THE SELECT FILL SHALL BE PLACED IN LOOSE LIFTS NOT EXCEEDING 8 INCHES AND SHOULD BE UNIFORMLY COMPACTED TO 95% MAXIMUM DRY DENSITY WITH +/- 2 PERCENTAGE POINTS OF THE OPTIMUM MOISTURE CONTENT.
2. FOLLOWING EXCAVATION AND PLACEMENT OF SELECT FILL, THE EXPOSED SUBGRADES ARE TO BE PROOF-ROLLED WITH A 15 TON PNEUMATIC ROLLER TO DETECT ANY SOFT OR POORLY COMPACTED AREAS. ALL WEAK AREAS IN THE SUBGRADE ARE TO BE REMOVED AND REPLACED WITH SELECT FILL. SHAPE SURFACE TO RECEIVE SAND FILL AS SHOWN ON PLANS AND DESCRIBED BELOW.
3. FILL FOR GRADE ADJUSTMENTS (BELOW CLEAN SAND) IS TO BE SELECT FILL, FREE OF ORGANIC AND DELETERIOUS MATERIAL AND HAVE A PLASTICITY INDEX BETWEEN 7 AND 20.
4. PLACE CLEAN SAND OR CLEAN BANK SAND BASE UNDER FLOOR PLATE IN 4-INCH MAXIMUM LIFTS, MEASURED LOOSE, AND COMPACT WITH PNEUMATIC, VIBRATORY OR MECHANICAL TAMPS. COMPACT TO 95% STANDARD PROCTOR MAXIMUM DRY DENSITY WITH +/-2 PERCENTAGE POINTS OF THE OPTIMUM MOISTURE CONTENT IN ACCORDANCE ASTM D698. AFTER COMPACTION, SLOPE SURFACE AREA OF SAND SUBGRADE 1 INCH PER 10 FEET FROM THE CENTER TO THE EDGE OF THE TANK.
5. CLEAN SAND OR CLEAN BANK SAND THAT IS FREE FROM CLAY LUMPS, SHALE, LOAM, ORGANIC MATTER, SALT OR CHLORIDES, AND OTHER DELETERIOUS MATERIALS IN ACCORDANCE WITH ASTM C33 SHALL BE USED BENEATH THE TANK FLOOR. WATER SOLUBLE IONIC (SALT) CONTAMINATION OF THE SAND SHALL BE DETERMINED AND LIMITED IN ACCORDANCE WITH AWWA D100-96, SECTION 12.6. MAXIMUM SULFATE LEVEL NOT TO EXCEED 200 PPM. SAND TO HAVE MAXIMUM PLASTICITY INDEX OF 7 IN ACCORDANCE WITH ASTM D-4318 AND NOT MORE THAN 15% PASSING A NO. 200 SIEVE, IN ACCORDANCE WITH ASTM C117. WATER, IF USED TO OBTAIN MOISTURE CONTENT, TO BE CLEAN AND FRESH.
6. THE OWNER SHALL PROVIDE FOR DENSITY TESTING AND WILL BE PERFORMED ON EACH LIFT OR FILL FOR GRADE ADJUSTMENTS AND FILL UNDER TANK FLOOR AS DIRECTED BY THE ENGINEER.
7. CONTRACTOR SHALL NOTIFY THE ENGINEER AT LEAST TWENTY-FOUR (24) HOURS PRIOR TO PROOF ROLLING AND DENSITY TESTING.

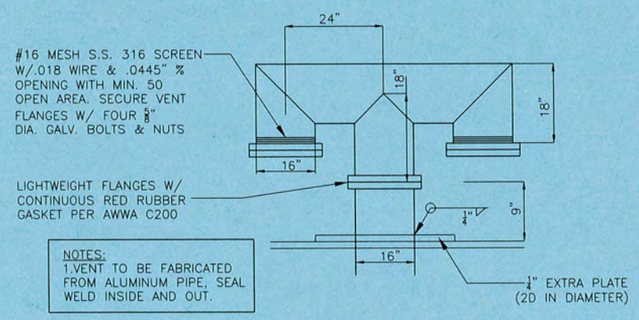

NOTES:
1.VENT TO BE FABRICATED FROM ALUMINUM PIPE, SEAL WELD INSIDE AND OUT.

CENTER ROOF VENT DETAIL

N.T.S.

NOTES:
1. W IS THE OVERFLOW PIPE DIAMETER OR 12" MIN
2. WHEN WEIR ELEVATION IS NOT SPECIFIED ON PLANS SET WEIR ELEVATION EQUAL TO ADJACENT TANK WEIR ELEVATION WHERE APPLICABLE OR 1 FOOT BELOW TANK RAFTERS WHICHEVER IS LOWER.

LENGTH (L)	DEPTH (D)	WIDTH (W)
3'-0"	12"	24"

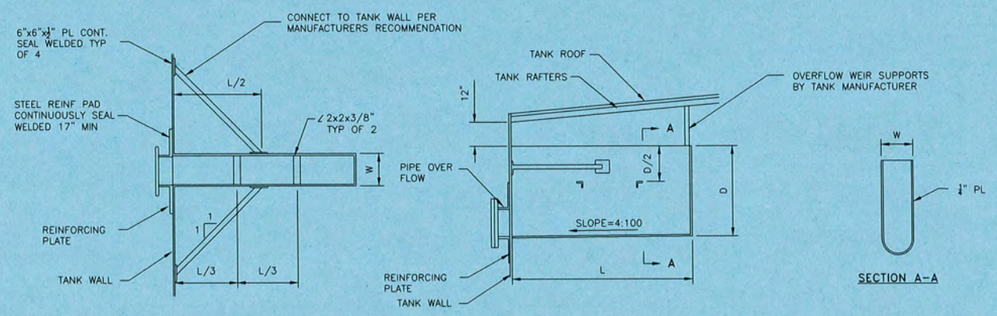

OVERFLOW WEIR

N.T.S.

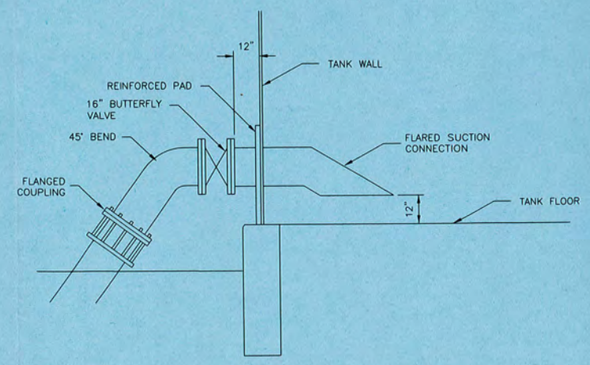

TANK SUCTION DETAIL

N.T.S.

No.	DATE	REVISION
1	9/6/16	ADDENDUM 1: SELECT FILL

8/17/16
STATE OF TEXAS
AMBER R. HURD
94679
LICENSED
PROFESSIONAL ENGINEER

SEABROOK

CobbFendley
TBPE Firm Registration No. 274
TBPLS Firm Registration No. 100467
13430 Northwest Freeway, Suite 1100
Houston, Texas 77040
713.462.3242 | fax 713.462.3262
www.cobbfendley.com

WATER PLANT RELOCATION

STEEL GROUND STORAGE TANK DETAILS (SHEET 3 OF 3)

SUBMITTED:	DESIGNED BY: MAL
SCALE:	DRAWN BY: MAL
DATE: 8/1/16	SHEET No.: 17 OF 35
SURVEY BY: CFA	DWG. NO:
F B NO:	

Section 00003

TABLE OF CONTENTS

Section	Title	No. of Pages
DIVISION 0 - BIDDING AND CONTRACT REQUIREMENTS		
00020	Notice to Bidders	1
00100	Instructions to Bidders	8
00300	Bid Form	7
00500	Agreement	5
00590	Ethics Certification Form 1295	1
00610	Performance Bond	2
00620	Payment Bond	2
00700	General Conditions	62
00800	Supplementary Conditions	5
DIVISION 1 - GENERAL REQUIREMENTS		
01010	Summary of Work	3
01255	Change Order Procedures	5
01270	Measurement & Payment	3
01321	Construction Photographs	3
01330	Submittal Procedures	4
01340	Shop Drawings, Product Data and Samples	2
01410	TPDES Requirements	11
01450	Contractor's Quality Control	2
01452	Inspection Services	1
01454	Testing Laboratory Services	3
01502	Mobilization	2
01555	Traffic Control and Regulation	3
01561	Trench Safety System	3
01562	Tree and Plant Protection	4
01570	Storm Water Pollution Control	13
01575	Stabilized Construction Exit	4
01576	Waste Material Disposal	2
01578	Control of Ground Water and Surface Water	8
01731	Cutting and Patching	3
01770	Closeout Procedures	2
01785	Project Record Documents	1
DIVISION 2 – SITE WORK		
02084	Frames, Grates, Rings and Covers	4
02221	Removing Existing Pavements, Structures, Wood, and Demolition Debris	4
02317	Excavation and Backfill for Utilities	14

02318 Extra Unit Price Work for Excavation and Backfill 2
02320 Utility Backfill Materials 10
02321 Cement Stabilized Sand 7
02336 Lime Stabilized Subgrade 7
02506 Polyvinyl Chloride Pipe 8
02511 Water Lines 20
02512 Water Tap and Service Line Installation 6
02513 Wet Connection 2
02514 Disinfection of Water Lines 3
02515 Hydrostatic Testing of Pipelines 2
02516 Cut Plug and Abandonment of Water Lines 2
02520 Fire Hydrants 5
02521 Gate Valves 6
02525 Tapping Sleeves and Valves 5
02611 Reinforced Concrete Pipe 3
02631 Storm Sewers 6
02633 Precast Concrete Inlets, Headwalls, and Wingwalls 4
02751 Concrete Paving 14
02752 Concrete Pavement Joints 6
02753 Concrete Pavement Curing 3
02754 Concrete Driveways 2
02771 Curb, Curb and Gutter, and Headers 3
02775 Concrete Sidewalks 5
02911 Topsoil 2
02922 Sodding 6

CONSTRUCTION SPECIFICATIONS

WP-200 Fiberglass Building 14
WP-210 Welded Ground Storage Tank 4
WP-225 Painting 10
WP-240 Chlorination 4
WP-275 Cleaning 2
WP-520 Piping 4

CITY OF SEABROOK

Approved Products List:
- Water & Sanitary
- Storm
- Street

DIVISION 16 – ELECTRICAL SPECIFICATIONS (SEE NEXT PAGE)

END OF SECTION

TABLE OF CONTENTS

DIVISION 16 - ELECTRICAL SPECIFICATIONS

16012	ELECTRICAL WORK	7
16111	CONDUIT, FITTINGS AND BODIES	9
16120	600-VOLT BUILDING WIRE AND CABLE	5
16131	DEVICE, PULL AND JUNCTION BOXES	3
16135	CABINETS, BOXES AND FITTINGS	7
16140	WIRING DEVICES	3
16195	ELECTRICAL IDENTIFICATION	8
16401	ELECTRIC SERVICE	2
16402	UNDERGROUND DUCT BANKS	4
16410	POWER FACTOR CORRECTION	4
16452	GROUNDING	9
16462	MOTOR CONTROL PANEL (MCP)	4
16475	OVERCURRENT PROTECTIVE DEVICES	13
16476	DISCONNECTS AND CIRCUIT BREAKERS	5
16481	MOTOR CONTROLLERS	8
16482	MOTOR-CONTROL CENTERS (600 V OR LESS)	10
16525	EXTERIOR LIGHTING	9

Coastal Bend Consultants, Inc.
TBPE Firm Reg. No. F-1069

Section 00020

NOTICE TO BIDDERS

Sealed BIDS for the construction of the Water Plant Relocation Project, Seabrook Project No. 2016-11, will be received until 10:00 a.m., September 9, 2016, in the office of the City Secretary, City Hall, 1700 First Street, Seabrook, Texas 77586. Bids must be received and time stamped by the City Secretary prior to the aforementioned time, when they will be publicly opened and read aloud at the City Hall, City of Seabrook, 1700 First Street, Seabrook, Texas 77586. Bidding Documents may be obtained upon payment of $75 (non-refundable) at the office of the Engineer, Cobb, Fendley & Associates, Inc., 13430 Northwest Freeway, Suite 1100, Houston, TX 77040, with checks made payable to the **City of Seabrook** or at www.civcastusa.com without charge. Documents can also be examined without charge at the office of the City Secretary.

A Cashier's Check, Certified Check, or acceptable Bid Bond, payable to **City of Seabrook** in an amount not less than 5% of the maximum Bid price submitted, must accompany each Bid as a guarantee that, if awarded the Contract, the Bidder will within 15 calendar days of award of Contract enter into a Contract and execute Bonds on the forms provided in the Contract Documents.

The successful Bidder must furnish PERFORMANCE and PAYMENT BONDS on the forms furnished with the PROPOSAL, in the amount of 100% of the total Contract price.

A **non-mandatory** pre-bid conference will be held at City Hall, City of Seabrook, 1700 First Street, Seabrook, Texas 77586, on September 1, 2016, at 9:00 a.m. All prospective Bidders are **encouraged** to attend.

Until final award of the Contract, the OWNER reserves the right to reject any or all Bids, to waive irregularities or technicalities, to re-advertise, or proceed to do the Work otherwise when in the best interests of the OWNER.

Section 00100

INSTRUCTIONS TO BIDDERS

The City may not accept this bid until it has received from the bidder a completed, signed, and notarized TEC Form 1295 complete with a certificate number assigned by the Texas Ethics Commission ("TEC"), pursuant to Texas Government Code § 2252.908 and the rules promulgated thereunder by the TEC. The undersigned understands that failure to provide said form complete with a certificate number assigned by the TEC will result in a non-conforming bid and will prohibit the City from considering this bid for acceptance.

Provision of Texas Ethics Commission Form 1295 ("TEC Form 1295") by Bidders: Effective January 1, 2016, pursuant to Texas Government Code § 2252.908 (the "Interested Party Disclosure Act" or the "Act"), the City may not award the contract to a bidder unless the bidder has provided to the City a completed, signed and notarized TEC Form 1295 which has been assigned a certificate number by the Texas Ethics Commission (the "TEC"). Pursuant to the rules prescribed by the TEC, the TEC Form 1295 must be completed online through the TEC's website, assigned a certificate number, printed, signed and notarized, and provided to the City. The TEC Form 1295 may accompany the bid or may be submitted separately, but must be provided to the City prior to the award of the contract. For purposes of completing the TEC Form 1295, the entity's name is City of Seabrook; the contract ID number is 2016-06 and the description of goods and services is, "Paving Improvements." Neither the City nor its consultants have the ability to verify the information included in a TEC Form 1295, and neither have an obligation nor undertake responsibility for advising any bidder with respect to the proper completion of the TEC Form 1295.

Refer to 00590 – Ethics Certification Form 1295 for completion.

1. DEFINITIONS

A. Terms used in these Instructions to Bidders which are defined in the Standard General Conditions of the Construction Contract (General Conditions) have the meanings assigned to them in the General Conditions. Other terms used in the Bidding Documents and not defined elsewhere have the following meanings, which are applicable to both the singular and plural thereof:

1. Bidder: One who submits a bid directly to the Owner.

2. Successful Bidder: The most qualified, responsible and responsive bidder to whom the Owner makes an award.

3. Bidding Documents: The Notice to Bidders, Instructions to Bidders, Supplementary Conditions to General Conditions, Special Conditions (Underground Utilities), Special Conditions to the Agreement, Proposal and the Proposed Contract Documents (including Addenda issued prior to receipt of Bids).

2. PREPARATION OF BIDS

A. Complete sets of bidding documents must be used in preparing bids. Neither the Owner nor Engineer assumes any responsibility for errors or misinterpretations resulting from the use of incomplete sets of bidding documents. Copies of bidding documents are made available only for the purpose of obtaining bids on the work and do not confer a license or grant for any other use.

3. QUALIFICATIONS OF BIDDERS

A. Each bidder must submit with the bid a Financial and Experience Statement. The statement shall be filed with the proposal in a separate sealed envelope marked "Financial and Experience Statement".

B. Financial statements from the three most qualified bidders will be retained by the Owner until award of the contract. NO FINANCIAL STATEMENT WILL BE READ ALOUD AT THE BID OPENING. Upon award of the contract, the statements of all unsuccessful bidders will be returned.

C. Additional written evidence of qualifications, such as financial data, previous experience, present commitments, and other such data as may be called for by the OWNER.

4. EXAMINATION OF CONTRACT DOCUMENTS AND SITE

A. It is the responsibility of each Bidder before submitting a Bid to (a) examine the Contract Documents thoroughly, (b) visit the site to become familiar with local conditions that may affect cost, progress, performance, or furnishing of the Work, (c) consider federal, state and local Laws and Regulations that may affect cost, progress, performance or furnishing of the Work, (d) study and carefully correlate Bidder's observations with the Contract Documents, and (e) notify ENGINEER of all conflicts, errors, or discrepancies in the Contract Documents discovered by the Bidder.

B. Information and data reflected in the Contract Documents with respect to Underground Facilities at or contiguous to the site is based upon information and data furnished to OWNER and ENGINEER by owners of such Underground Facilities or others, and OWNER does not assume responsibility for the accuracy or completeness thereof unless it is expressly provided otherwise in the Supplementary Conditions.

C. Provisions concerning responsibilities for the adequacy of data furnished to prospective Bidders on subsurface conditions, underground facilities, and other physical conditions, and possible changes in the Contract Documents due to differing conditions appear in Paragraphs 4.02, 4.03, and 4.04 of the General Conditions.

D. Before submitting a Bid, each Bidder will, at Bidder's own expense, make or obtain any additional examinations, investigations, explorations, tests, and studies, and obtain any additional information and data which pertain to the physical conditions (surface, subsurface, and Underground Facilities) at or contiguous to the site or otherwise which

may affect cost, progress, performance, or furnishing of the Work, and which Bidder deems necessary to determine its Bid for performing and furnishing the Work in accordance with the time, price, and other terms and conditions of the Contract Documents.

E. On request in advance, OWNER will provide each Bidder access to the site to conduct such explorations and tests as each Bidder deems necessary for submission of a Bid. Bidder shall clean up and restore the site to its former condition upon completion of such explorations.

F. Failure to perform such investigations during the Bid period shall not relieve Bidder from responsibility for investigations, interpretations and proper use of available information in preparation of Bidder's proposal.

G. The lands upon which the Work is to be performed, rights-of-way, and easements for access thereto and other lands designated for use by CONTRACTOR in performing the Work are identified in the Contract Documents. All additional lands and access thereto required for temporary construction facilities or storage of materials and equipment are to be provided by CONTRACTOR. Easements for permanent structures or permanent changes in existing structures are to be obtained and paid for by OWNER unless otherwise provided in the Contract Documents.

H. The submission of a Bid will constitute an incontrovertible representation by Bidder that Bidder has complied with every requirement of this Article 4, that without exception the Bid is premised upon performing and furnishing the Work required by the Contract Documents and such means, methods, techniques, sequences, or procedures of construction as may be indicated in or required by the Contract Documents, and that the Contract Documents are sufficient in scope and detail to indicate and convey understanding of all terms and conditions for performance and furnishing of the Work.

5. INTERPRETATION OF DOCUMENTS AND ADDENDA

A. All questions about the meaning or intent of the Contract Documents must be submitted to the Engineer in writing at least ten (10) days prior to the opening of bids. Interpretations or clarifications considered necessary by ENGINEER in response to such questions will be issued by Addenda at least 48 hours prior to Bid Opening.

B. Any interpretation of the Contract Documents will be made only by Addendum duly issued, and a copy of such addendum will be made available to each prospective bidder recorded by ENGINEER as having received a set of Contract Documents. Each Bidder is responsible for obtaining Addenda. Only questions answered by formal written Addenda will be binding. Oral and other interpretations or clarifications will be without legal effect.

C. Addenda may also be issued to modify the Contract Documents as deemed advisable by OWNER and ENGINEER.

6. BID SECURITY

A. Each Bid shall be accompanied by Bid security made payable to OWNER in an amount of five percent of the Bidder's maximum Bid price and in the form of a bid bond, cashier's check, or certified check. Bid Bond shall have a "B+" rating from Best's Key Rating Guide, and shall be duly authorized by the State of Texas to execute Bid Security.

B. The Bid security of the Successful Bidder will be retained until such Bidder has executed the Agreement and furnished the required contract security, whereupon the Bid security will be returned. If the Successful Bidder fails to execute and deliver the Agreement and furnish the required contract security with 15 calendar days after the Notice of Award, OWNER may annul the Notice of Award and the Bid security of that Bidder will be forfeited. The Bid security of other Bidders whom OWNER believes to have a reasonable chance of receiving the award may be retained by OWNER until the earlier of the seventh day after the Effective Date of the Agreement or the forty-sixth day after the Bid opening, whereupon Bid security furnished by such Bidders will be returned. Bid security with Bids which are not competitive will be returned within 7 days after the Bid opening.

7. CONTRACT TIME

A. The number of days within which, or the dates by which, the Work is to be substantially completed and also completed and ready for final payment (the Contract Time) are set forth in the Agreement.

8. LIQUIDATED DAMAGES

A. Provisions for liquidated damages, if any, are set forth in the Agreement.

9. SUBSTITUTE OR "OR EQUAL" ITEMS

A. The Contract, if awarded, will be on the basis of materials and equipment described in the DRAWINGS or specified in the Specifications without consideration of possible substitute or "or equal" items. Whenever it is indicated in the Drawings or specified in the Specifications that a substitute or "or equal" item of material or equipment may be furnished or used by CONTRACTOR if acceptable to ENGINEER, application for such acceptance will not be considered by ENGINEER until after the Effective Date of the Agreement. The procedure for submission of any such application by CONTRACTOR and consideration by ENGINEER is set forth in Paragraph 6.05 of the General Conditions and may be supplemented in the General Requirements (Division 1).

10. SUBCONTRACTORS, SUPPLIERS AND OTHERS

A. If the Supplementary Conditions require the identity of certain Subcontractors, Suppliers, and other person and organizations (including those who are to furnish the principal items of material and equipment) to be submitted to OWNER in advance of the specified date prior to the Effective Date of the Agreement, the apparent Successful Bidder, and any other Bidder so requested, shall within 7 days after the Bid opening, submit to OWNER a

list of all such Subcontractors, Suppliers, and other persons and organizations proposed for those portions of the Work for which such identification is required. Such list shall be accompanied by an experience statement with pertinent information regarding similar projects and other evidence of qualification for each such Subcontractor, Supplier, person, or organization, either may, before the Notice of Award is given, request the apparent Successful Bidder to submit an acceptable substitute without an increase in Bid price.

B. If apparent Successful Bidder declines to make any such substitution, OWNER may award the Contract to the next lowest Bidder that proposes to use acceptable Subcontractors, Suppliers, and other persons and organizations. The declining to make requested substitutions will not constitute grounds for sacrificing the Bid security of any Bidder. Any Subcontractor, Supplier, other person, or organization listed and to whom OWNER or ENGINEER does not make written objection prior to the giving of the Notice of Award will be deemed acceptable to OWNER and ENGINEER subject to revocation of such acceptance after the Effective Date of the Agreement as provided in Paragraph 6.06.B of the General Conditions.

C. In Contracts where the Contract Price is on the basis of Cost of Work Plus a Fee, the apparent Successful Bidder, prior to the Notice of Award, shall identify in writing to OWNER those portions of the Work that such Bidder proposes to subcontract and after the Notice of Award may only subcontract other portions of the Work with OWNER'S written consent.

D. No CONTRACTOR shall be required to employ any Subcontractor, Supplier, other person, or organization against whom CONTRACTOR has a reasonable objection.

11. BID FORMS

A. All Bids shall be completely filled out on the specified bid forms without modification or provisions unless otherwise required.

B. The Bids shall be completed in duplicate. The original shall be filed with the OWNER and the Bidder shall keep the duplicate.

C. The Bids must be clearly and legibly filled out in ink or typed.

D. All Bids must be officially executed. Bids by Corporations must be executed in the corporate name by the president or vice president (or other corporate officer, accompanied by evidence of authority to sign) and the corporate seal must be affixed and attested by the secretary or assistant secretary. The corporate address and state of incorporation must be shown below the signature. Bids by partnerships must be executed in the partnership name and signed by a partner, whose title must appear under the signature, and the official address of the partnership must be shown below the signature. All business entity names must be registered with the Secretary of State of Texas and appropriate office of registration.

E. The Bid shall contain an acknowledgement of receipt of all Addenda (the numbers of which must be filled in on the Bid Form).

12. SUBMISSION OF BIDS

A. Bids shall be submitted at the time and place indicated in the Notice to Bidders, and shall be enclosed in an opaque sealed envelope marked with the Project title, name and address of the Bidder and containing Bid security and other required documents. Bids will be securely kept unopened, until the specified time. The bids received after the specified time will not be considered. All incomplete Bids shall be considered non-responsive. If the Bid is sent through the mail or other delivery system, the sealed envelope shall be enclosed in a separate envelope with the notation "BID ENCLOSED" on the face of it.

13. MODIFICATION AND WITHDRAWAL OF BIDS

A. Bids may be modified or withdrawn by an appropriate document duly executed (in the manner that a Bid must be executed) and delivered to the place where Bids are to be submitted at any time prior to opening of Bids.

B. If, within 24 hours after Bids are opened, any Bidder files a duly signed, written notice with OWNER and promptly thereafter demonstrates to the reasonable satisfaction of OWNER that there was a material and substantial mistake in the preparation of its Bid, that Bidder may withdraw its Bid and the Bid security will be returned. Thereafter, that Bidder will be disqualified from further bidding on the Work to be provided under the Contract Documents.

14. OPENING OF BIDS

A. Bids will be opened and read aloud publicly. An abstract of the amounts of the base Bids and major alternates (if any) will be made available to Bidders within 7 calendar days after the date of Bid opening.

15. BIDS TO REMAIN SUBJECT TO ACCEPTANCE

A. The apparent Successful Bid and the next two lowest Bids will remain subject to acceptance for 45 calendar days after the day of the Bid opening. All other Bids will be released and the Bid security returned within 7 days. OWNER may, in its sole discretion, release any Bid and return the Bid security prior to that date.

16. AWARD OF CONTRACT

A. Contract will be awarded on basis of low Base Bid. Selection of alternates or deductive Bid Items by the OWNER will not be used to displace the low Bidder.

B. The Owner reserves the right to reject any and all bids, to waive any and all informalities not involving price, time or changes in the Work, to negotiate contract terms with the Successful Bidder, and to disregard all non-conforming, non-responsive, unbalanced or conditional Bids. Also, OWNER reserves the right to reject the Bid of any Bidder if OWNER believes that it would not be in the best interest of the Project to make an award to that Bidder, whether because the Bid is not responsive or the Bidder is unqualified or of

doubtful financial ability or fails to meet any other pertinent standard or criteria established by OWNER. Discrepancies in the multiplication of units of Work and unit prices will be resolved in favor of the unit prices. Discrepancies between the indicated sum of any column of figures and the correct sum thereof will be resolved in favor of the correct sum.

C. In evaluating Bids, OWNER will consider the qualifications of the Bidders, whether or not the Bids comply with the prescribed requirements and such alternates, unit prices, and other data, as may be requested in the Bid Form or prior to the Notice of Award.

D. OWNER may consider the qualifications and experience of Subcontractors, Suppliers, and other persons and organizations proposed for those portions of the Work as to which the identity of Subcontractors, Suppliers, and other persons and organizations must be submitted as provided in the Supplementary Conditions. OWNER also may consider the operating costs, maintenance requirements, performance data, and guarantees of major items of materials and equipment proposed for incorporation in the Work when such data is required to be submitted prior to the Notice of Award.

E. OWNER may conduct such investigations as OWNER deems necessary to assist in the evaluation of any Bid and to establish the responsibility, qualifications, and financial ability of Bidders, proposed Subcontractors, Suppliers, and other persons and organizations to perform and furnish the Work in accordance with the Contract Documents to OWNER'S satisfaction within the prescribed time.

F. Alternate bid items are included in the Bid Form. The Successful Bidder will be determined based on either the low Base Bid (Part C of the Bid), or the low Base Bid Plus Alternate Bid (Part E of the Bid), at the discretion of the OWNER.

G. If the Contract is to be awarded, OWNER will give the Successful Bidder a Notice of Award within 60 calendar days after the day of the Bid opening.

17. CONTRACT SECURITY

A. Paragraph 5.1 of the General Conditions and the Supplementary Conditions set forth OWNER'S requirements as to performance and payment Bonds. When the Successful Bidder delivers the executed Agreement to OWNER, it must be accompanied by the required performance and payment Bonds.

18. INSURANCE CERTIFICATES

A. The CONTRACTOR shall provide and maintain a minimum coverage as defined in the Contract Documents (Article 5 of the General Conditions). The companies providing the coverage shall be acceptable to the OWNER (Certificate of Insurance Section 00650).

19. SIGNING OF AGREEMENT

A. When OWNER gives a Notice of Award to the Successful Bidder, it will be accompanied by the required number of unsigned counterparts of the Agreement with all other written Contract Documents attached. Within 15 calendar days thereafter, CONTRACTOR shall sign and deliver the required number of counterparts of the Agreement, and attached documents to OWNER with the required Bonds. Within 10 calendar days thereafter, OWNER shall deliver one fully signed counterpart to CONTRACTOR. Each counterpart is to be accompanied by a complete set of the Drawings with appropriate identification.

20. PRE-BID CONFERENCE

A. A pre-bid conference will be held at the time and place indicated in the Invitation to Bid (Section 00020). Representatives of OWNER and ENGINEER will be present to discuss the Project. All prospective bidders are encouraged to attend and participate in the conference. ENGINEER will notify all prospective Bidders of record of any such Addenda as ENGINEER considers necessary in response to questions arising at the conference.

21. SALES TAX

A. Owner is exempt from Texas sales and use taxes pursuant to Texas Tax Code §151.309 as a political subdivision of the State of Texas. OWNER shall provide CONTRACTOR with a completed Texas Sales and Use Tax Exemption Certification as evidence of the applicability of such exemption and, accordingly, CONTRACTOR shall not collect Texas sales and use taxes from OWNER with respect to this Contract. CONTRACTOR and all Subcontractors to CONTRACTOR shall issue a Texas Sales and Use Tax Exemption Certification with respect to, and shall not pay Texas sales and use taxes on, all purchases of the following items that are exempt from Texas sales and use taxes pursuant to Texas Tax Code §151.311: (i) tangible personal property that will be incorporated into OWNER'S realty; (ii) tangible personal property that is necessary and essential for the performance of this Contract and is consumed entirely on the job site; and (iii) taxable services for use in the performance of this Contract that are performed at the job site and are either integral to the performance of this Contract or expressly required to be provided by this Contract. In addition, CONTRACTOR and all Subcontractors to CONTRACTOR (i) shall not include any provision for Texas sales and use taxes with respect to such exempt items in any bid or contract amount, and (ii) shall pass on to OWNER cost savings due to the exempt status of such exempt items. CONTRACTOR'S contracts with all Subcontractors to CONTRACTOR shall include the foregoing provision regarding the exemption from Texas sales and use taxes.

END OF SECTION

Section 00300

BID FORM

TO: City of Seabrook
City Hall
1700 First Street
Seabrook, Texas 77586

PROJECT: Water Plant Relocation

PROJECT NO.: 2016-11

BIDDER: Lowy & Son, Inc.
(Print or Type full name of proprietorship, partnership, corporation, or joint venture.)

1. The undersigned bidder proposes and agrees, if this Bid is accepted, to enter into an Agreement with OWNER in the form included in the Contract Documents to perform and furnish all Work as specified or indicated in the Contract Documents for the Contract Price and within the Contract Time indicated in this Bid and in accordance with the other terms and conditions of the Contract Documents.

2. BIDDER accepts all of the terms and conditions of the Advertisement or Invitation to Bid and Instructions to Bidders, including without limitation those dealing with the deposition of Bid Security. This Bid will remain subject to acceptance for 60 calendar days after the day of Bid opening. BIDDER will sign and submit the Agreement with the Bonds and other documents required by the Bidding Requirements within 15 calendar days after the date of OWNER'S Notice of Award.

3. In submitting this Bid, BIDDER represents, as more fully set forth in the Agreement, that:

   A. BIDDER has examined copies of all the Bidding Documents and of the following Addenda (receipt of all which is hereby acknowledged):

Date	Number
9/6/16	1

   B. BIDDER has familiarized itself with the nature and extent of the Contract Documents, Work, site, locality, and all local conditions and Laws and Regulations that in any manner may affect cost, progress, performance, or furnishing of the Work.

   C. BIDDER has studied carefully all reports and drawings of subsurface conditions and drawings of physical conditions as provided in Paragraph 4.02 of the General Conditions,

and accepts the determination of the technical data contained in such reports and drawings upon which BIDDER is entitled to rely.

D. BIDDER has obtained and carefully studied (or assumes responsibility for obtaining and carefully studying) all such examinations, investigations, explorations, tests, and studies (in addition to or to supplement those referred to in C above) which pertain to the subsurface or physical conditions at the site or otherwise may affect the cost, progress, performance, or furnishing of the Work as BIDDER considers necessary for the performance or furnishing of the Work at the Contract Price, within the Contract Time, and in accordance with the other terms and conditions of the Contract Documents, including specifically the provisions of Paragraph 4.02 of the General Conditions; and no additional examinations, investigations, explorations, tests, reports, or similar information or data are or will be required by BIDDER for such purposes.

E. BIDDER has reviewed and checked all information and data shown or indicated on the Contract Documents with respect to existing underground facilities at or contiguous to the site and assumes responsibility for the accurate location of said underground facilities. No additional examinations, investigations, explorations, tests, reports, or similar information or data in respect to said underground facilities are or will be required by BIDDER in order to perform and furnish the Work at the Contract Price, within the Contract Time, and in accordance with the other terms and conditions of the Contract Documents, including specifically the provisions of Paragraph 4.03 of the General Conditions.

F. BIDDER has correlated the results of all such observations, examinations, investigations, explorations, tests, reports, and studies with the terms and conditions of the Contract Documents.

G. BIDDER has given ENGINEER written notice of all conflicts, errors, or discrepancies that it has discovered in the Contract Documents, and the written resolution thereof by ENGINEER is acceptable to BIDDER.

H. This Bid is genuine and not made in the interest of or on behalf of any undisclosed person, firm, or corporation, and is not submitted in conformity with any Agreement or rules of any group, association, organization, or corporation; BIDDER has not directly or indirectly induced or solicited any other BIDDER to submit a false or sham Bid; BIDDER has not solicited or induced any person, firm, or corporation to refrain from bidding; and BIDDER has not sought by collusion to obtain for itself any advantage over any other BIDDER or over OWNER.

4. BIDDER will complete the Work for the following price: (Note: Bid item is for work complete in place). These prices are to cover all expenses incurred in performing the work required under the Contract Documents, including related work that may not be specifically mentioned.

A. BASE BID ITEMS

Item No.	Item Description	Unit	Quantity	Unit Price	Extended Price
	WATER PLANT 1				
1	Mobilization (5% max)	LS	1	38,000.00	38,000.00
2	Demolition of Existing GST, Pump Building, yard piping, generator foundation, fence	LS	1	47,350.00	47,350.00
3	Site Preparation and Final Grading	LS	1	4,500.00	4,500.00
4	TPDES Requirements	LS	1	4,500.00	4,500.00
5	Architectural CMU Fence with limestone veneer and Gate	LF	230	400.00	92,000.00
6	Crushed Concrete Driveway 6-inch thick	LS	1	11,000.00	11,000.00
7	Motor Control Center with concrete slab and awning	LS	1	123,950.00	123,950.00
8	Generator Foundation and relocation of generator from WP2	LS	1	14,250.00	14,250.00
9	Relocate 2-inch gas service to new generator location	LS	1	2,250.00	2,250.00
10	Relocate Chlorine Disinfection system into a new fiberglass enclosure on a concrete pad	LS	1	13,200.00	13,200.00
11	Plant Yard Piping	LS	1	41,800.00	41,800.00
12	Complete Electrical System, including MCC, conduit, ductbank and wire	LS	1	36,150.00	36,150.00
13	Proposed 10" well collection line, abandonment of 12" well collection line and 12' water line	LF	1188	34.80	41,104.80
	SUBTOTAL WATER PLANT 1				470,054.80
	WATER PLANT 2				
14	Demolition of yard piping, driveway, fence	LS	1	6,550.00	6,550.00
15	Site Preparation and Final grading	LS	1	4,500.00	4,500.00
16	TPDES Requirements	LS	1	4,500.00	4,500.00
17	1 MG Welded Steel Ground Storage Tank and Foundation	LS	1	604,250.00	604,250.00
18	Install 500 gpm Booster Pump (supplied by the City)	EA	4	650.00	2,600.00
19	Concrete Block Building and Foundation including roof, doors, trolley hoist, floor drains, HVAC, lighting, sidewalk, emergency eye wash/shower	LS	1	131,000.00	131,000.00
20	Complete Electrical System, including MCC, conduit, ductbank and wire	LS	1	269,100.00	269,100.00

21	Relocation of generator from WP1	LS	1	2,550.00	2,550.00
22	Water plant yard piping and connection to distribution system	LS	1	183,650.00	183,650.00
23	Chlorine gas disinfection system	LS	1	35,500.00	35,500.00
24	Concrete driveway, 7-inch thick	SY	532	81.00	44,600.00
25	Storm sewer improvements including inlets, splash boxes, and storm sewer	LS	1	31,000.00	31,000.00
26	Relocate 2-inch gas service line	LS	1	2,250.00	2,250.00
27	8-foot tall Chainlink Fence and swing gate with PVC privacy slats	LF	725	37.40	27,115.00
				SUBTOTAL WATER PLANT 2	1,349,253.00
				TOTAL BASE BID PRICE	1,819,307.00

B. CASH ALLOWANCES

Item No.	Item Description	Unit	Quantity	Unit Price	Extended Price
28	Painting two City logos on the ground storage tank (2 colors)	LS	1	$20,000	$20,000
29	Upgrade and relocation of electrical services by Electric Service Provider	LS	1	$50,000	$50,000
30	SCADA equipment and integration into existing system by vendor of Owner's choice	LS	1	$15,000	$15,000
				SUBTOTAL CASH ALLOWANCES	85,000.00

C. ALTERNATE BID ITEMS

Item No.	Item Description	Unit	Quantity	Unit Price	Extended Price
31	Remove 12-inch Well Collection, 12-inch Water Lines, 4-inch Forcemain, and 6-inch Sewer Line within 18-foot Water and Sewer Easement	LF	1200	15.00	18,000.00
				SUBTOTAL ALTERNATE BID ITEMS	18,000.00

D. TOTAL BID PRICE

Subtotal Base Bid Items $ 1,819,307.00

Subtotal Cash Allowances $ 85,000.00

Subtotal Alternate Bid Items $ 18,000.00

TOTAL BID PRICE $ 1,922,307.00

E. DEDUCTIONS FROM BID ITEMS

BIDDER acknowledges that OWNER has a maximum funding limitation and that OWNER may adjust the total quantity of the items listed above to conform to that limitation. Reducing the quantity of items listed in this BID shall not invoke the provisions of Paragraph 11.03D.1 of the General Conditions unless such reduction exceeds 20% of any individual item.

5. BIDDER agrees that the Work will be substantially complete and completed and ready for final payment in accordance with Paragraph 14.07 of the General Conditions on or before the dates or within the number of calendar days indicated in the Agreement.

6. The following documents are attached to and made a condition of this Bid:

   A. Required Bid Security in the form of a Bid Bond, Cashier's Check, or Certified Check.

7. Communications concerning this Bid shall be addressed to the business address of BIDDER indicated herein.

8. The terms used in this Bid which are defined in the General Conditions of the Construction Contract included as part of the Contract Documents have the meanings assigned to them in the General Conditions.

SUBMITTED on Sept 9, 2016.

Bidder: Brown & Son Inc.
(Print or Type full name of your proprietorship, partnership, corporation, or joint venture.*)

**By: [signature] 9/9/16
Signature Date

Name: Charles W. Brown President
(Print or Type name) Title

Address: 13014 Queensbury Ln.
(Mailing)
Houston, Tx 77079
(Street, if different)

Telephone and Fax Number: 713-461-7032 713-935-6278
(Print or Type numbers)

* If Bid is a joint venture, add additional Bid Form signature sheets for each member of the joint venture.

** Bidder certifies that the only person or parties interested in this offer as principals are those named above. Bidder has not directly or indirectly entered into any agreement,

participated in any collusion, or otherwise taken any action in restraint of free competitive bidding.

Note: This document constitutes a government record, as defined by § 37.01 of the Texas Penal Code. Submission of a false government record is punishable as provided in § 37.10 of the Texas Penal Code.

END OF SECTION

Section 00500

AGREEMENT

THIS AGREEMENT is dated as of _September 20, 2016_, by and between City of Seabrook (hereinafter called OWNER) and _Long & Son, Inc._ (hereinafter called CONTRACTOR).

OWNER and CONTRACTOR, in consideration of the mutual covenants hereinafter set forth, agree as follows:

Article 1. WORK

CONTRACTOR shall complete all Work as specified or indicated in the Contract Documents. The work is generally described as follows:

"Water Plant Relocation"

Article 2. ENGINEER

The project has been designed by Cobb Fendley & Associates, who is hereinafter called ENGINEER and who is to act as OWNER'S representative, assume all duties and responsibilities and have the rights and authority assigned to ENGINEER in the Contract Documents in connection with completion of the Work in accordance with the Contract Documents.

Article 3. CONTRACT TIMES

3.1 The Work will be substantially completed within 300 days after the date when the Contract Times commence to run as provided in paragraph 2.03 of the General Conditions, and completed and ready for final payment in accordance with paragraph 14.07 of the General Conditions within 330 days after the date when the Contract Times commence to run.

3.2 Liquidated Damages. OWNER and CONTRACTOR recognize that time is of the essence of this Agreement and that OWNER will suffer financial loss if the Work is not completed within the times specified in paragraph 3.1 above, plus any extensions thereof allowed in accordance with Article 12 of the General Conditions. They also recognize the delays, expense and difficulties involved in proving in a legal or arbitration preceding the actual loss suffered by OWNER if the Work is not completed on time. Accordingly, instead of requiring any such proof, OWNER and CONTRACTOR agree that as liquidated damages for delay (but not as a penalty) CONTRACTOR shall pay OWNER Five Hundred and no/100 dollars ($ 500.00) for each day that expires after the time specified in paragraph 3.1 for Substantial Completion until the Work is substantially complete. After Substantial Completion, if CONTRACTOR shall neglect, refuse or fail to complete the remaining Work within the time specified in Paragraph 3.1 for completion and readiness for final payment or any proper extension thereof granted by OWNER, CONTRACTOR shall pay OWNER Five Hundred and no/100 dollars ($500.00) for each day that expires after the time specified in paragraph 3.1 for completion and readiness for final payment.

Article 4. CONTRACT PRICE

The OWNER shall pay to the CONTRACTOR in current funds the price or prices shown in CONTRACTOR'S Bid, which forms a part of this Contract, such payments to be subject to the General and Special Conditions of the Contract. The total amount awarded is $_1,922,307.80_.

Article 5. PAYMENT PROCEDURES

CONTRACTOR shall submit Applications for Payment in accordance with Article 14 of the General Conditions. Applications for Payment will be processed by ENGINEER as provided in the General Conditions.

5.1. Progress Payments. OWNER shall make progress payments on account of the Contract Price on the basis of CONTRACTOR'S Applications for Payment as recommended by ENGINEER, on or about the last day of each month during construction as provided below. All progress payments will be on the basis of the progress of the Work measured by the schedule of values established in Paragraph 2.07 of the General Conditions (and in the case of Unit Price Work based on the number of units completed) or, in the event there is no schedule of values, as provided in the General Requirements.

5.1.1. Prior to Substantial Completion, progress payments will be made in an amount equal to 95% of Work completed, but, in each case, less the aggregate of payments previously made and less such amounts as ENGINEER shall determine, or OWNER may withhold, in accordance with paragraph 14.7 of the General Conditions. Payment will not be made for materials on site but not construction in place.

5.1.2. Upon Substantial Completion, in an amount sufficient to increase total payments to CONTRACTOR to 95% of the Contract Price, less such amounts as ENGINEER shall determine, or OWNER may withhold, in accordance with paragraph 14.7 of the General Conditions.

5.2 Final Payment. Upon final completion and acceptance of the Work in accordance with paragraph 14.07 of the General Conditions, OWNER shall pay the remainder of the Contract Price as recommended by ENGINEER as provided in said paragraph 14.07.

Article 6. INTEREST

All moneys not paid when due as provided in Article 14 of the General Conditions shall bear interest at the maximum rate allowed by law at the place of the Project.

Article 7. CONTRACTOR'S REPRESENTATIONS

In order to induce OWNER to enter into this Agreement CONTRACTOR makes the following representations:

7.1 CONTRACTOR has familiarized itself with the nature and extent of the Contract Documents, work, site, locality, and all local conditions and Laws and Regulations that in any manner may affect costs, progress, performance or furnishing the Work.

7.2 CONTRACTOR has studied carefully all reports of explorations and tests of subsurface conditions and drawings of physical conditions provided in paragraph 4.02 of the General Conditions, and accepts the determination of the technical data contained in such reports and drawings upon which CONTRACTOR is entitled to rely.

7.3 CONTRACTOR has obtained and carefully studied (or assumes responsibility for obtaining and carefully studying) all such examinations, investigations, explorations, tests, reports and studies (in addition to or to supplement those referred to in paragraph 7.2 above) which pertain to the subsurface or physical conditions at or contiguous to the site otherwise may affect the cost, progress, performance or furnishing of the Work as CONTRACTOR considers necessary for the performance or furnishing of the Work at the Contract Price, within the Contract Time and in accordance with other terms and conditions of the Contract Documents, including specifically the provisions of paragraph 4.02 of the General Conditions; and no additional examinations, investigations, explorations, tests, reports, studies or similar information or data are or will be required by CONTRACTOR for such purposes.

7.4 CONTRACTOR has reviewed and checked all information and data shown or indicated on the Contract Documents with respect to existing underground facilities at or contiguous to the site and assumes responsibility for accurate location of said underground facilities. No additional examinations, investigations, explorations, tests, reports, studies or similar information or data are or will be required by CONTRACTS in order to perform and furnish the Work at the Contract Price, within the Contract Time and in accordance with other terms and conditions of the Contract Documents, including specifically the provisions of paragraph 4.03 of the General Conditions. .

7.5 CONTRACTOR has correlated the results of all such observations, examinations, investigations, explorations, tests, reports and studies with the terms and conditions of the Contract Documents.

7.6 CONTRACTOR has given ENGINEER written notice of all conflicts, errors, ambiguities or discrepancies that CONTRACTOR has discovered in the Contract and the Contract Documents are generally sufficient to indicate and convey understanding of all terms and conditions for performance and furnishing of the Work.

7.7 Under Section 231.006, Family code, the CONTRACTOR certifies that the individual or business entity named in this contract, bid, or application is not ineligible to receive the specified grant, loan, or payment and acknowledges that this contract may be terminated and payment may be withheld if this certification is inaccurate.

Article 8. CONTRACT DOCUMENTS

The Contract Documents, which comprise the entire agreement between OWNER and CONTRACTOR concerning the Work, consist of the following:

8.1 This Agreement (pages 00500-1 to 00500-5, inclusive).

8.2 Performance and Payment Bonds

8.3 Notice of Award

8.4 General Conditions (pages 00700-0 thru 00700-62, inclusive) and

8.5 Specifications bearing the title "*Construction Documents and Technical Specifications for Water Plant Relocation Project.*"

8.6 CONTRACTOR'S Bid (pages 00300-1 to 00300-6 inclusive).

8.7 Documentation submitted by CONTRACTOR prior to Notice of Award.

8.8 Certificate of Insurance.

8.9 Drawings consisting of sheets numbered 1 through 12, inclusive, bearing the general title "*Water Plant Relocation.*"

8.10 The following which may be delivered or issued after the Effective Date of the Agreement and are not attached hereto: All Written Amendments and other documents amending, modifying or supplementing the Contract Documents pursuant to paragraphs 3.04 and 3.05 of the General Conditions.

There are no Contract Documents other than those listed above in this Article 13. The Contract Documents may only be amended, modified or supplemented as provided in paragraphs 3.04 and 3.05 of the General Conditions.

Article 9. MISCELLANEOUS

9.1 Terms used in this Agreement, which are defined in Article 1 of the General Conditions will have the meanings indicated in the General Conditions.

9.2 No assignment by a party hereto of any rights under or interests in the Contract Documents will be binding on another party hereto without the written consent of the party sought to be bound; and, specifically but without limitation, moneys that may become due and moneys that are due may not be assigned without such consent (except to the extent that the effect of this restriction may be limited by law), and unless specifically stated to the contrary in any written consent to an assignment no assignment will release or discharge the assignor from any duty or responsibility under the Contract Documents.

9.3 OWNER and CONTRACTOR each binds itself, its partners, officers, directors, shareholders, successors, assigns and legal representatives to the other party hereto, its partners, officers, directors, shareholders, successors, assigns and legal representatives in respect to all covenants, agreements and obligations contained in the Contract Documents.

IN WITNESS WHEREOF, OWNER and CONTRACTOR have signed this Agreement in triplicate. One counterpart each has been delivered to OWNER, CONTRACTOR and ENGINEER. All portions of the Contract Documents have been signed, initialed or identified by OWNER and CONTRACTOR or identified by ENGINEER on their behalf.

This Agreement will be effective on September 20, 2016 (which is the Effective Date of the Agreement).

OWNER

CITY OF SEABROOK

By: _____

Attest: _____

Address for giving notice:

1700 First Street

Seabrook, Texas 77586

CONTRACTOR:

LONG & SON, INC.

By: _____
Title: President

Attest: _____

Address for giving notice:

13014 Queensbury Ln

Houston, TX 77079

By: _____
Title: Vice President

Attest: _____

Agent for service of process:

_____

_____

(If CONTRACTOR is a corporation or a partnership, attach evidence of authority to sign.)

END OF SECTION

Section 00610

PERFORMANCE BOND

KNOW ALL MEN BY THESE PRESENTS: That Long & Son, Inc. of the City of Houston of Harris County, and State of Texas as principal, and Hartford Fire Insurance Company, authorized under the laws of the State of Texas to act as surety on Bonds for principals, are held and firmly bound unto City of Seabrook (Owner), in the penal sum of $1,922,307.80 for the payment whereof, the said Principal and Surety bind themselves, and their heirs, administrators, executors, successors and assigns, jointly and severally, by these presents:

WHEREAS, the Principal has entered into a certain written contract with the Owner, dated the 20 day of September 2016, for Work associated with the project named:

"Water Plant Relocation"

NOW THEREFORE, THE CONDITION OF THIS OBLIGATION IS SUCH that if the said Principal shall faithfully perform said Contract and shall in all respects duly and faithfully observe and perform all and singular the covenants, conditions and agreements in and by said Contract agreed and covenanted by the Principal to be observed and performed, and according to the true intent and meaning of said Contract and Plans and Specifications hereto annexed, then this obligation shall be void; otherwise to remain in full force and effect;

"PROVIDED, HOWEVER, that this bond is executed pursuant to the provisions of Chapter 2253 of the Texas Government Code, as amended, and all liabilities on this Bond shall be determined in accordance with the provisions of said Statute to the same extent as if it were copied at length herein."

Surety, for value received, stipulates and agrees that no change, extension of time, alteration or addition to the terms of the contract, or to the work performed thereunder, or the Plans, Specifications, or Drawings accompanying the same, shall in any way affect its obligation on this Bond, and it does hereby waive notice of any such change, extension of time, alteration or addition to the terms of the Contract, or to the Work to be performed thereunder.

IN WITNESS WHEREOF, the said Principal and Surety have signed and sealed this instrument this 22nd day of September, 20 16.

Contractor	**Surety**
Long & Son; Inc.	Hartford Fire Insurance Company
By:	By:
Title: PRESIDENT	Sharon Cavanaugh Title: Attorney-in-Fact
Address: 13014 Queensbury Ln	Address: 3000 Internet Blvd., #600
Houston, TX 77079	Frisco, Texas 75034
Telephone: 713-461-7032	Telephone: 800-873-8212
Fax: 713-935-9278	Fax: 866-275-5989

NOTICE: THE ADDRESS OF THE SURETY COMPANY TO WHICH ANY NOTICE OF CLAIM SHOULD BE SENT MAY BE OBTAINED FROM THE TEXAS DEPARTMENT OF INSURANCE BY CALLING ITS TOLL-FREE TELEPHONE NUMBER; 1-800-252-3439.

END OF SECTION

Section 00620

PAYMENT BOND

KNOW ALL MEN BY THESE PRESENTS: That Long & Son, Inc. of the City of Houston of Harris County, and State of Texas as principal, and Hartford Fire Insurance Company, authorized under the laws of the State of Texas to act as surety on Bonds for principals, are held and firmly bound unto City of Seabrook (Owner), in the penal sum of $1,922,307.80 for the payment whereof, the said Principal and Surety bind themselves, and their heirs, administrators, executors, successors and assigns, jointly and severally, by these presents:

WHEREAS, the Principal has entered into a certain written contract with the Owner, dated the 20 day of September 2016, for Work associated with the project named:

"Water Plant Relocation"

NOW, THEREFORE, THE CONDITION OF THIS OBLIGATION IS SUCH, that if the said Principal shall pay all claimants supplying labor and material to him or a Subcontractor in the prosecution of the Work provided for in said contract, then, this obligation shall be void; otherwise to remain in full force and effect;

PROVIDED, HOWEVER, that this bond is executed pursuant to the provisions of Chapter 2253 of the Texas Government Code, as amended, and all liabilities on this Bond shall be determined in accordance with the provisions of said Statute to the same extent as if it were copied at length herein.

Surety, for value received, stipulates and agrees that no change, extension of time, alteration or addition to the terms of the Contract, or to the Work performed thereunder, or the Plans, Specifications or Drawings accompanying the same, shall in any way affect its obligation on this Bond, and it does hereby waive notice of any such change, extension of time, alteration or addition to the terms of the Contract, or to the Work to be performed thereunder.

IN WITNESS WHEREOF, the said Principal and Surety have signed and sealed this instrument this 22nd day of September, 20 16.

Contractor	**Surety**
Long & Son, Inc.	Hartford Fire Insurance Company
By:	By: Sharon Cavanaugh
Title: PRESIDENT	Title: Attorney-in-Fact
Address: 13014 Queensbury Ln	Address: 3000 Internet Blvd., #600
Houston, TX 77079	Frisco, Texas 75034
Telephone: 713-461-7032	Telephone: 800-873-8212
Fax: 713-935-9278	Fax: 866-275-5989

NOTICE: THE ADDRESS OF THE SURETY COMPANY TO WHICH ANY NOTICE OF CLAIM SHOULD BE SENT MAY BE OBTAINED FROM THE TEXAS DEPARTMENT OF INSURANCE BY CALLING ITS TOLL-FREE TELEPHONE NUMBER; 1-800-252-3439.

END OF SECTION

CERTIFICATE OF INTERESTED PARTIES

FORM 1295

Complete Nos. 1 - 4 and 6 if there are interested parties.
Complete Nos. 1, 2, 3, 5, and 6 if there are no interested parties.

OFFICE USE ONLY
CERTIFICATION OF FILING

Certificate Number:
2016-109179

Date Filed:
09/07/2016

Date Acknowledged:

1 Name of business entity filing form, and the city, state and country of the business entity's place of business.

Long & Son, Inc.
Houston, TX United States

2 Name of governmental entity or state agency that is a party to the contract for which the form is being filed.

City of Seabrook

3 Provide the identification number used by the governmental entity or state agency to track or identify the contract, and provide a description of the services, goods, or other property to be provided under the contract.

2016 - 11
City of Seabrook Water Plant Relocation

4 Name of Interested Party	City, State, Country (place of business)	Nature of interest (check applicable)	
		Controlling	Intermediary
Long, Charles T.	Houston, TX United States		X
Long, Charles W.	Houston, TX United States	X	

5 Check only if there is NO Interested Party. ☐

6 AFFIDAVIT

I swear, or affirm, under penalty of perjury, that the above disclosure is true and correct.

JUSTTIN NEAL
Notary Public
STATE OF TEXAS
My Comm. Exp. 11/13/2019
ID# 13044884-8

Signature of authorized agent of contracting business entity

AFFIX NOTARY STAMP / SEAL ABOVE

Sworn to and subscribed before me, by the said Charles Long, this the 27 day of Sep., 20 16, to certify which, witness my hand and seal of office.

Signature of officer administering oath	Printed name of officer administering oath	Title of officer administering oath
	Justtin Neal	PB

POWER OF ATTORNEY

Direct Inquiries/Claims to:
THE HARTFORD
BOND, T-12
One Hartford Plaza
Hartford, Connecticut 06155
Bond.Claims@thehartford.com
call: **888-266-3488** *or fax:* **860-757-5835**

KNOW ALL PERSONS BY THESE PRESENTS THAT: **Agency Code:** 61-610074

- [X] **Hartford Fire Insurance Company**, a corporation duly organized under the laws of the State of Connecticut
- [X] **Hartford Casualty Insurance Company**, a corporation duly organized under the laws of the State of Indiana
- [X] **Hartford Accident and Indemnity Company**, a corporation duly organized under the laws of the State of Connecticut
- [ ] **Hartford Underwriters Insurance Company**, a corporation duly organized under the laws of the State of Connecticut
- [ ] **Twin City Fire Insurance Company**, a corporation duly organized under the laws of the State of Indiana
- [ ] **Hartford Insurance Company of Illinois**, a corporation duly organized under the laws of the State of Illinois
- [ ] **Hartford Insurance Company of the Midwest**, a corporation duly organized under the laws of the State of Indiana
- [ ] **Hartford Insurance Company of the Southeast,** a corporation duly organized under the laws of the State of Florida

having their home office in Hartford, Connecticut, (hereinafter collectively referred to as the "Companies") do hereby make, constitute and appoint, ***up to the amount of*** Unlimited :

Sharon Cavanaugh of Houston TX, C.W. Adams, Roxanne G. Brune, Sharen Groppell, David R. Groppell, Francine Hay, Beverly A. Ireland, Sue Kohler, Edward L. Moore, Kurt A. Risk, James W. Tomforde, Gloria Villa of HOUSTON, Texas

their true and lawful Attorney(s)-in-Fact, each in their separate capacity if more than one is named above, to sign its name as surety(ies) only as delineated above by ☒, and to execute, seal and acknowledge any and all bonds, undertakings, contracts and other written instruments in the nature thereof, on behalf of the Companies in their business of guaranteeing the fidelity of persons, guaranteeing the performance of contracts and executing or guaranteeing bonds and undertakings required or permitted in any actions or proceedings allowed by law.

In Witness Whereof, and as authorized by a Resolution of the Board of Directors of the Companies on May 6, 2015 the Companies have caused these presents to be signed by its Senior Vice President and its corporate seals to be hereto affixed, duly attested by its Assistant Secretary. Further, pursuant to Resolution of the Board of Directors of the Companies, the Companies hereby unambiguously affirm that they are and will be bound by any mechanically applied signatures applied to this Power of Attorney.

John Gray, Assistant Secretary

M. Ross Fisher, Senior Vice President

STATE OF CONNECTICUT
COUNTY OF HARTFORD } ss. Hartford

On this 11th day of January, 2016, before me personally came M. Ross Fisher, to me known, who being by me duly sworn, did depose and say: that he resides in the County of Hartford, State of Connecticut; that he is the Senior Vice President of the Companies, the corporations described in and which executed the above instrument; that he knows the seals of the said corporations; that the seals affixed to the said instrument are such corporate seals; that they were so affixed by authority of the Boards of Directors of said corporations and that he signed his name thereto by like authority.

Nora M. Stranko
Notary Public
My Commission Expires March 31, 2018

CERTIFICATE

I, the undersigned, Assistant Vice President of the Companies, DO HEREBY CERTIFY that the above and foregoing is a true and correct copy of the Power of Attorney executed by said Companies, which is still in full force effective as of 22nd day of September , 2016
Signed and sealed at the City of Hartford.

Kevin Heckman, Assistant Vice President

Inquiries Regarding Claims

Hartford Fire Insurance Company
Hartford Casualty Insurance Company
Hartford Accident and Indemnity Company
Hartford Underwriters Insurance Company
Twin City Insurance Company
Hartford Insurance Company of Illinois
Hartford insurance Company of the Midwest
Hartford Insurance Company of the Southeast

Please address inquiries regarding **Claims** for all surety and fidelity products issued by The Hartford's underwriting companies to the following:

Phone Number	:	888-266-3488
Fax - Claims	:	860-757-5835 or 860-547-8265
E-mail	:	claims@1stepsurety.com
Mailing Address	:	The Hartford The Hartford Fidelity & Bonding (BOND) Hartford Plaza 690 Asylum Avenue Hartford, CT 06115

IMPORTANT NOTICE

To obtain information or make a complaint:

You may contact your agent.

You may call Hartford Insurance Group at the toll free telephone number for information or to make a complaint at:

1-800-392-7805

You may also write to The Hartford:

The Hartford
Hartford Financial Products
2 Park Avenue, 5th Floor
New York, New York 10016
1-212-277-0400

You may contact the Texas Department of Insurance to obtain information on companies, coverages, rights or complaints at:

1-800-252-3439

You may write the Texas Department of Insurance

P.O. Box 149104
Austin, TX 78714-9104
Fax Number (512) 475-1771
Web: http://www.tdi.state.tx.us
E-mail: ConsumerProtection@tdi.state.tx.us

PREMIUM OR CLAIMS DISPUTES: Should you have a dispute concerning your premium or about a claim you should contact the agent first. If the dispute is not resolved, you may contact the Texas Department of Insurance.

ATTACH THIS NOTICE TO YOUR POLICY: This notice is for your information only and does not become a part or condition of the attached document.

AVISO IMPORTANTE

Para obtener informacion o para someter una queja.

Puede comunicarse con su agente.

Usted puede llamar al numero de telefono gratis de The Hartford Insurance Group para indormacion o para someter una queja al

1-800-392-7805

Usted tambien puede escribir a The Hartford.

The Hartford
Hartford Financial Products
2 Park Avenue, 5th Floor
New York, New York 10016
1-212-277-0400

Puede comunicarse con el Departamento de Seguros de Texas para obtener informacion acerca de compañías, coberturas, derechos o quejas al:

1-800-252-3439

Puede escribir al Departamento de Seguros de Texas

P.O. Box 149104
Austin, TX 78714-9104
Fax Number (512) 475-1771
Web: http://www.tdi.state.tx.us
E-mail: ConsumerProtection@tdi.state.tx.us

DISPUTAS SOBRE PRIMAS O RECLAMOS: Si tiene una disputa concerniente a su prima o a un reclamo, debe comunicarse con su agente primero. Si no se resuelve la disputa, puede entonces comunicarse con el departamento (TDI).

UNA ESTE AVISO A SU POLIZA: Este aviso es solo para proposito de informacion y no se convierte en parte o condicion del documento adjunto.

ACORD®

CERTIFICATE OF LIABILITY INSURANCE

DATE (MM/DD/YYYY) 9/22/2016

THIS CERTIFICATE IS ISSUED AS A MATTER OF INFORMATION ONLY AND CONFERS NO RIGHTS UPON THE CERTIFICATE HOLDER. THIS CERTIFICATE DOES NOT AFFIRMATIVELY OR NEGATIVELY AMEND, EXTEND OR ALTER THE COVERAGE AFFORDED BY THE POLICIES BELOW. THIS CERTIFICATE OF INSURANCE DOES NOT CONSTITUTE A CONTRACT BETWEEN THE ISSUING INSURER(S), AUTHORIZED REPRESENTATIVE OR PRODUCER, AND THE CERTIFICATE HOLDER.

IMPORTANT: If the certificate holder is an ADDITIONAL INSURED, the policy(ies) must be endorsed. If SUBROGATION IS WAIVED, subject to the terms and conditions of the policy, certain policies may require an endorsement. A statement on this certificate does not confer rights to the certificate holder in lieu of such endorsement(s).

PRODUCER
Marsh & McLennan Agency, LLC
1776 Yorktown, Suite 200
Houston TX 77056

CONTACT NAME: Phyllis Lynch
PHONE (A/C, No, Ext): 713-780-6191 FAX (A/C, No): 212-948-6598
E-MAIL ADDRESS: Phyllis.Lynch@marshmc.com

INSURER(S) AFFORDING COVERAGE	NAIC #
INSURER A : Continental Insurance Company	35289
INSURER B : American Casualty Company of Readin	20427
INSURER C : Continental Casualty Company	20443
INSURER D : Transportation Insurance Company	20494
INSURER E :	
INSURER F :	

INSURED
Long and Son Inc
13014 Queensbury
Houston TX 77079

LONG&-2

COVERAGES **CERTIFICATE NUMBER:** 2008667519 **REVISION NUMBER:**

THIS IS TO CERTIFY THAT THE POLICIES OF INSURANCE LISTED BELOW HAVE BEEN ISSUED TO THE INSURED NAMED ABOVE FOR THE POLICY PERIOD INDICATED. NOTWITHSTANDING ANY REQUIREMENT, TERM OR CONDITION OF ANY CONTRACT OR OTHER DOCUMENT WITH RESPECT TO WHICH THIS CERTIFICATE MAY BE ISSUED OR MAY PERTAIN, THE INSURANCE AFFORDED BY THE POLICIES DESCRIBED HEREIN IS SUBJECT TO ALL THE TERMS, EXCLUSIONS AND CONDITIONS OF SUCH POLICIES. LIMITS SHOWN MAY HAVE BEEN REDUCED BY PAID CLAIMS.

INSR LTR	TYPE OF INSURANCE	ADDL INSR	SUBR WVD	POLICY NUMBER	POLICY EFF (MM/DD/YYYY)	POLICY EXP (MM/DD/YYYY)	LIMITS	
A	GENERAL LIABILITY			4028755046	4/30/2016	4/30/2017	EACH OCCURRENCE	$1,000,000
	X COMMERCIAL GENERAL LIABILITY						DAMAGE TO RENTED PREMISES (Ea occurrence)	$300,000
	CLAIMS-MADE X OCCUR						MED EXP (Any one person)	$5,000
							PERSONAL & ADV INJURY	$1,000,000
							GENERAL AGGREGATE	$2,000,000
	GEN'L AGGREGATE LIMIT APPLIES PER:						PRODUCTS - COMP/OP AGG	$2,000,000
	POLICY X PRO-JECT LOC							$
B	AUTOMOBILE LIABILITY			4028755029	4/30/2016	4/30/2017	COMBINED SINGLE LIMIT (Ea accident)	$1,000,000
	ANY AUTO						BODILY INJURY (Per person)	$
	ALL OWNED AUTOS / SCHEDULED AUTOS						BODILY INJURY (Per accident)	$
	HIRED AUTOS / NON-OWNED AUTOS						PROPERTY DAMAGE (Per accident)	$
								$
C	X UMBRELLA LIAB X OCCUR			4028755032	4/30/2016	4/30/2017	EACH OCCURRENCE	$5,000,000
	EXCESS LIAB CLAIMS-MADE						AGGREGATE	$5,000,000
	DED X RETENTION $ 10,000						Follow Form	$
D	WORKERS COMPENSATION AND EMPLOYERS' LIABILITY			4028755015	4/30/2016	4/30/2017	X WC STATU-TORY LIMITS / OTH-ER	
	ANY PROPRIETOR/PARTNER/EXECUTIVE OFFICER/MEMBER EXCLUDED? Y / N	N / A					E.L. EACH ACCIDENT	$1,000,000
	(Mandatory in NH) If yes, describe under DESCRIPTION OF OPERATIONS below						E.L. DISEASE - EA EMPLOYEE	$1,000,000
							E.L. DISEASE - POLICY LIMIT	$1,000,000
C	Builders Risk/Instal Fltr Contractors Pollution			4029060340	4/30/2016	4/30/2017	Builders Risk Pollution Ea Occ Pollution Agg	$5,000,000 $1,000,000 $1,000,000

DESCRIPTION OF OPERATIONS / LOCATIONS / VEHICLES (Attach ACORD 101, Additional Remarks Schedule, if more space is required)

The General Liability, Auto Liability and Umbrella Liability policies include a blanket automatic additional insured endorsement that provides additional insured status when there is an executed written contract that requires such status. The General Liability, Auto Liability, Umbrella Liability and Workers' Compensation policies include a blanket automatic waiver of subrogation endorsement that provides this feature only when there is an executed written contract that requires it. The General Liability policy's additional insured endorsement includes "Primary and Non-contributory" wording. The See Attached...

CERTIFICATE HOLDER

City of Seabrook
City Hall
1700 First Street.
Seabrook TX 77586

CANCELLATION

SHOULD ANY OF THE ABOVE DESCRIBED POLICIES BE CANCELLED BEFORE THE EXPIRATION DATE THEREOF, NOTICE WILL BE DELIVERED IN ACCORDANCE WITH THE POLICY PROVISIONS.

AUTHORIZED REPRESENTATIVE
Audrey C. Gruppo

© 1988-2010 ACORD CORPORATION. All rights reserved.

The ACORD name and logo are registered marks of ACORD

AGENCY CUSTOMER ID: LONG&-2

LOC #:

ADDITIONAL REMARKS SCHEDULE

AGENCY	NAMED INSURED
Marsh & McLennan Agency, LLC	Long and Son Inc 13014 Queensbury Houston TX 77079
POLICY NUMBER	
CARRIER / NAIC CODE	EFFECTIVE DATE:

ADDITIONAL REMARKS

THIS ADDITIONAL REMARKS FORM IS A SCHEDULE TO ACORD FORM,

FORM NUMBER: 25 FORM TITLE: CERTIFICATE OF LIABILITY INSURANCE

Umbrella is not excess over the Pollution Policy.
The General Liability and Auto Liability policies includes blanket automatic additional insured (ongoing & completed operations) endorsement(s) that provides additional insured status to the certificate holder only when there is an executed written contract between the named insured and the certificate holder that requires such status. The General Liability, Auto Liability and Workers' Compensation policies include a blanket automatic waiver of subrogation endorsement that provides this feature only when there is an executed written contract between the named insured and the certificate holder that requires it. The General Liability and Auto Liability policies contains a special endorsement with "Primary and Noncontributory" wording.
The General Liability, Automobile Liability and Umbrella Liability policies include a Blanket Additional Insured endorsement that provides additional insured status only where such status is required by a written contract. The General Liability, Automobile Liability, Workers' Compensation and Umbrella Liability policies include a Blanket Waiver of Subrogation endorsement that provides this status only where such status is required by a written contract. The "Primary and Non-contributory" wording is included in the General Liability Additional Insured Endorsement where there is a written contract that requires such status. 30 Day Notice of cancellation applies to General Liability, Automobile and Workers' Compensation.

Project: Water Plant Relocation
Project No.: 2016-11

© 2008 ACORD CORPORATION. All rights reserved.

The ACORD name and logo are registered marks of ACORD

This document has important legal consequences; consultation with an attorney is encouraged with respect to its use or modification. This document should be adapted to the particular circumstances of the contemplated Project and the controlling Laws and Regulations.

STANDARD GENERAL CONDITIONS OF THE CONSTRUCTION CONTRACT

Prepared by

ENGINEERS JOINT CONTRACT DOCUMENTS COMMITTEE

and

Issued and Published Jointly by

AMERICAN COUNCIL OF ENGINEERING COMPANIES

ASSOCIATED GENERAL CONTRACTORS OF AMERICA

AMERICAN SOCIETY OF CIVIL ENGINEERS

PROFESSIONAL ENGINEERS IN PRIVATE PRACTICE
A Practice Division of the
NATIONAL SOCIETY OF PROFESSIONAL ENGINEERS

Endorsed by

CONSTRUCTION SPECIFICATIONS INSTITUTE

Copyright © 2007 National Society of Professional Engineers for EJCDC. All rights reserved.

These General Conditions have been prepared for use with the Suggested Forms of Agreement Between Owner and Contractor (EJCDC C-520 or C-525, 2007 Editions). Their provisions are interrelated and a change in one may necessitate a change in the other. Comments concerning their usage are contained in the Narrative Guide to the EJCDC Construction Documents (EJCDC C-001, 2007 Edition). For guidance in the preparation of Supplementary Conditions, see Guide to the Preparation of Supplementary Conditions (EJCDC C-800, 2007 Edition).

Copyright © 2007 National Society of Professional Engineers
1420 King Street, Alexandria, VA 22314-2794
(703) 684-2882
www.nspe.org

American Council of Engineering Companies
1015 15th Street N.W., Washington, DC 20005
(202) 347-7474
www.acec.org

American Society of Civil Engineers
1801 Alexander Bell Drive, Reston, VA 20191-4400
(800) 548-2723
www.asce.org

Associated General Contractors of America
2300 Wilson Boulevard, Suite 400, Arlington, VA 22201-3308
(703) 548-3118
www.agc.org

The copyright for this EJCDC document is owned jointly by the four
EJCDC sponsoring organizations and held in trust for their benefit by NSPE.

Copyright © 2007 National Society of Professional Engineers for EJCDC. All rights reserved.

STANDARD GENERAL CONDITIONS OF THE CONSTRUCTION CONTRACT

TABLE OF CONTENTS

Page

Article 1 – Definitions and Terminology 1
1.01 Defined Terms 1
1.02 Terminology 5

Article 2 – Preliminary Matters 6
2.01 Delivery of Bonds and Evidence of Insurance 6
2.02 Copies of Documents 6
2.03 Commencement of Contract Times; Notice to Proceed 6
2.04 Starting the Work 7
2.05 Before Starting Construction 7
2.06 Preconstruction Conference; Designation of Authorized Representatives 7
2.07 Initial Acceptance of Schedules 7

Article 3 – Contract Documents: Intent, Amending, Reuse 8
3.01 Intent 8
3.02 Reference Standards 8
3.03 Reporting and Resolving Discrepancies 9
3.04 Amending and Supplementing Contract Documents 9
3.05 Reuse of Documents 10
3.06 Electronic Data 10

Article 4 – Availability of Lands; Subsurface and Physical Conditions; Hazardous Environmental Conditions; Reference Points 11
4.01 Availability of Lands 11
4.02 Subsurface and Physical Conditions 11
4.03 Differing Subsurface or Physical Conditions 12
4.04 Underground Facilities 13
4.05 Reference Points 14
4.06 Hazardous Environmental Condition at Site 14

Article 5 – Bonds and Insurance 16
5.01 Performance, Payment, and Other Bonds 16
5.02 Licensed Sureties and Insurers 16
5.03 Certificates of Insurance 17
5.04 Contractor's Insurance 17
5.05 Owner's Liability Insurance 19
5.06 Property Insurance 19
5.07 Waiver of Rights 20
5.08 Receipt and Application of Insurance Proceeds 21

Copyright © 2007 National Society of Professional Engineers for EJCDC. All rights reserved.

5.09 Acceptance of Bonds and Insurance; Option to Replace 21
5.10 Partial Utilization, Acknowledgment of Property Insurer 22

Article 6 – Contractor's Responsibilities 22
6.01 Supervision and Superintendence 22
6.02 Labor; Working Hours 22
6.03 Services, Materials, and Equipment 22
6.04 Progress Schedule 23
6.05 Substitutes and "Or-Equals" 23
6.06 Concerning Subcontractors, Suppliers, and Others 25
6.07 Patent Fees and Royalties 27
6.08 Permits 27
6.09 Laws and Regulations 28
6.10 Taxes 28
6.11 Use of Site and Other Areas 28
6.12 Record Documents 29
6.13 Safety and Protection 29
6.14 Safety Representative 30
6.15 Hazard Communication Programs 30
6.16 Emergencies 30
6.17 Shop Drawings and Samples 31
6.18 Continuing the Work 32
6.19 Contractor's General Warranty and Guarantee 33
6.20 Indemnification 33
6.21 Delegation of Professional Design Services 34

Article 7 – Other Work at the Site 35
7.01 Related Work at Site 35
7.02 Coordination 35
7.03 Legal Relationships 36

Article 8 – Owner's Responsibilities 36
8.01 Communications to Contractor 36
8.02 Replacement of Engineer 36
8.03 Furnish Data 36
8.04 Pay When Due 36
8.05 Lands and Easements; Reports and Tests 36
8.06 Insurance 36
8.07 Change Orders 37
8.08 Inspections, Tests, and Approvals 37
8.09 Limitations on Owner's Responsibilities 37
8.10 Undisclosed Hazardous Environmental Condition 37
8.11 Evidence of Financial Arrangements 37
8.12 Compliance with Safety Program 37

Article 9 – Engineer's Status During Construction 37
9.01 Owner's Representative 37

Copyright © 2007 National Society of Professional Engineers for EJCDC. All rights reserved.

9.02 Visits to Site 37
9.03 Project Representative 38
9.04 Authorized Variations in Work 38
9.05 Rejecting Defective Work 38
9.06 Shop Drawings, Change Orders and Payments 39
9.07 Determinations for Unit Price Work 39
9.08 Decisions on Requirements of Contract Documents and Acceptability of Work 39
9.09 Limitations on Engineer's Authority and Responsibilities 39
9.10 Compliance with Safety Program 40

Article 10 – Changes in the Work; Claims 40
10.01 Authorized Changes in the Work 40
10.02 Unauthorized Changes in the Work 41
10.03 Execution of Change Orders 41
10.04 Notification to Surety 41
10.05 Claims 41

Article 11 – Cost of the Work; Allowances; Unit Price Work 42
11.01 Cost of the Work 42
11.02 Allowances 45
11.03 Unit Price Work 45

Article 12 – Change of Contract Price; Change of Contract Times 46
12.01 Change of Contract Price 46
12.02 Change of Contract Times 47
12.03 Delays 47

Article 13 – Tests and Inspections; Correction, Removal or Acceptance of Defective Work 48
13.01 Notice of Defects 48
13.02 Access to Work 48
13.03 Tests and Inspections 49
13.04 Uncovering Work 49
13.05 Owner May Stop the Work 50
13.06 Correction or Removal of Defective Work 50
13.07 Correction Period 50
13.08 Acceptance of Defective Work 51
13.09 Owner May Correct Defective Work 52

Article 14 – Payments to Contractor and Completion 52
14.01 Schedule of Values 52
14.02 Progress Payments 52
14.03 Contractor's Warranty of Title 55
14.04 Substantial Completion 55
14.05 Partial Utilization 56
14.06 Final Inspection 57
14.07 Final Payment 57
14.08 Final Completion Delayed 58

Copyright © 2007 National Society of Professional Engineers for EJCDC. All rights reserved.

14.09 Waiver of Claims 58

Article 15 – Suspension of Work and Termination 59
15.01 Owner May Suspend Work 59
15.02 Owner May Terminate for Cause 59
15.03 Owner May Terminate For Convenience 60
15.04 Contractor May Stop Work or Terminate 60

Article 16 – Dispute Resolution 61
16.01 Methods and Procedures 61

Article 17 – Miscellaneous 61
17.01 Giving Notice 61
17.02 Computation of Times 62
17.03 Cumulative Remedies 62
17.04 Survival of Obligations 62
17.05 Controlling Law 62
17.06 Headings 62

Copyright © 2007 National Society of Professional Engineers for EJCDC. All rights reserved.

ARTICLE 1 – DEFINITIONS AND TERMINOLOGY

1.01 *Defined Terms*

A. Wherever used in the Bidding Requirements or Contract Documents and printed with initial capital letters, the terms listed below will have the meanings indicated which are applicable to both the singular and plural thereof. In addition to terms specifically defined, terms with initial capital letters in the Contract Documents include references to identified articles and paragraphs, and the titles of other documents or forms.

1. *Addenda*—Written or graphic instruments issued prior to the opening of Bids which clarify, correct, or change the Bidding Requirements or the proposed Contract Documents.

2. *Agreement*—The written instrument which is evidence of the agreement between Owner and Contractor covering the Work.

3. *Application for Payment*—The form acceptable to Engineer which is to be used by Contractor during the course of the Work in requesting progress or final payments and which is to be accompanied by such supporting documentation as is required by the Contract Documents.

4. *Asbestos*—Any material that contains more than one percent asbestos and is friable or is releasing asbestos fibers into the air above current action levels established by the United States Occupational Safety and Health Administration.

5. *Bid*—The offer or proposal of a Bidder submitted on the prescribed form setting forth the prices for the Work to be performed.

6. *Bidder*—The individual or entity who submits a Bid directly to Owner.

7. *Bidding Documents*—The Bidding Requirements and the proposed Contract Documents (including all Addenda).

8. *Bidding Requirements*—The advertisement or invitation to bid, Instructions to Bidders, Bid security of acceptable form, if any, and the Bid Form with any supplements.

9. *Change Order*—A document recommended by Engineer which is signed by Contractor and Owner and authorizes an addition, deletion, or revision in the Work or an adjustment in the Contract Price or the Contract Times, issued on or after the Effective Date of the Agreement.

10. *Claim*—A demand or assertion by Owner or Contractor seeking an adjustment of Contract Price or Contract Times, or both, or other relief with respect to the terms of the Contract. A demand for money or services by a third party is not a Claim.

11. *Contract*—The entire and integrated written agreement between the Owner and Contractor concerning the Work. The Contract supersedes prior negotiations, representations, or agreements, whether written or oral.

Copyright © 2007 National Society of Professional Engineers for EJCDC. All rights reserved.

12. *Contract Documents*—Those items so designated in the Agreement. Only printed or hard copies of the items listed in the Agreement are Contract Documents. Approved Shop Drawings, other Contractor submittals, and the reports and drawings of subsurface and physical conditions are not Contract Documents.

13. *Contract Price*—The moneys payable by Owner to Contractor for completion of the Work in accordance with the Contract Documents as stated in the Agreement (subject to the provisions of Paragraph 11.03 in the case of Unit Price Work).

14. *Contract Times*—The number of days or the dates stated in the Agreement to: (i) achieve Milestones, if any; (ii) achieve Substantial Completion; and (iii) complete the Work so that it is ready for final payment as evidenced by Engineer's written recommendation of final payment.

15. *Contractor*—The individual or entity with whom Owner has entered into the Agreement.

16. *Cost of the Work*—See Paragraph 11.01 for definition.

17. *Drawings*—That part of the Contract Documents prepared or approved by Engineer which graphically shows the scope, extent, and character of the Work to be performed by Contractor. Shop Drawings and other Contractor submittals are not Drawings as so defined.

18. *Effective Date of the Agreement*—The date indicated in the Agreement on which it becomes effective, but if no such date is indicated, it means the date on which the Agreement is signed and delivered by the last of the two parties to sign and deliver.

19. *Engineer*—The individual or entity named as such in the Agreement.

20. *Field Order*—A written order issued by Engineer which requires minor changes in the Work but which does not involve a change in the Contract Price or the Contract Times.

21. *General Requirements*—Sections of Division 1 of the Specifications.

22. *Hazardous Environmental Condition*—The presence at the Site of Asbestos, PCBs, Petroleum, Hazardous Waste, or Radioactive Material in such quantities or circumstances that may present a substantial danger to persons or property exposed thereto.

23. *Hazardous Waste*—The term Hazardous Waste shall have the meaning provided in Section 1004 of the Solid Waste Disposal Act (42 USC Section 6903) as amended from time to time.

24. *Laws and Regulations; Laws or Regulations*—Any and all applicable laws, rules, regulations, ordinances, codes, and orders of any and all governmental bodies, agencies, authorities, and courts having jurisdiction.

25. *Liens*—Charges, security interests, or encumbrances upon Project funds, real property, or personal property.

26. *Milestone*—A principal event specified in the Contract Documents relating to an intermediate completion date or time prior to Substantial Completion of all the Work.

Copyright © 2007 National Society of Professional Engineers for EJCDC. All rights reserved.

27. *Notice of Award*—The written notice by Owner to the Successful Bidder stating that upon timely compliance by the Successful Bidder with the conditions precedent listed therein, Owner will sign and deliver the Agreement.

28. *Notice to Proceed*—A written notice given by Owner to Contractor fixing the date on which the Contract Times will commence to run and on which Contractor shall start to perform the Work under the Contract Documents.

29. *Owner*—The individual or entity with whom Contractor has entered into the Agreement and for whom the Work is to be performed.

30. *PCBs*—Polychlorinated biphenyls.

31. *Petroleum*—Petroleum, including crude oil or any fraction thereof which is liquid at standard conditions of temperature and pressure (60 degrees Fahrenheit and 14.7 pounds per square inch absolute), such as oil, petroleum, fuel oil, oil sludge, oil refuse, gasoline, kerosene, and oil mixed with other non-Hazardous Waste and crude oils.

32. *Progress Schedule*—A schedule, prepared and maintained by Contractor, describing the sequence and duration of the activities comprising the Contractor's plan to accomplish the Work within the Contract Times.

33. *Project*—The total construction of which the Work to be performed under the Contract Documents may be the whole, or a part.

34. *Project Manual*—The bound documentary information prepared for bidding and constructing the Work. A listing of the contents of the Project Manual, which may be bound in one or more volumes, is contained in the table(s) of contents.

35. *Radioactive Material*—Source, special nuclear, or byproduct material as defined by the Atomic Energy Act of 1954 (42 USC Section 2011 et seq.) as amended from time to time.

36. *Resident Project Representative*—The authorized representative of Engineer who may be assigned to the Site or any part thereof.

37. *Samples*—Physical examples of materials, equipment, or workmanship that are representative of some portion of the Work and which establish the standards by which such portion of the Work will be judged.

38. *Schedule of Submittals*—A schedule, prepared and maintained by Contractor, of required submittals and the time requirements to support scheduled performance of related construction activities.

39. *Schedule of Values*—A schedule, prepared and maintained by Contractor, allocating portions of the Contract Price to various portions of the Work and used as the basis for reviewing Contractor's Applications for Payment.

Copyright © 2007 National Society of Professional Engineers for EJCDC. All rights reserved.

40. *Shop Drawings*—All drawings, diagrams, illustrations, schedules, and other data or information which are specifically prepared or assembled by or for Contractor and submitted by Contractor to illustrate some portion of the Work.

41. *Site*—Lands or areas indicated in the Contract Documents as being furnished by Owner upon which the Work is to be performed, including rights-of-way and easements for access thereto, and such other lands furnished by Owner which are designated for the use of Contractor.

42. *Specifications*—That part of the Contract Documents consisting of written requirements for materials, equipment, systems, standards and workmanship as applied to the Work, and certain administrative requirements and procedural matters applicable thereto.

43. *Subcontractor*—An individual or entity having a direct contract with Contractor or with any other Subcontractor for the performance of a part of the Work at the Site.

44. *Substantial Completion*—The time at which the Work (or a specified part thereof) has progressed to the point where, in the opinion of Engineer, the Work (or a specified part thereof) is sufficiently complete, in accordance with the Contract Documents, so that the Work (or a specified part thereof) can be utilized for the purposes for which it is intended. The terms "substantially complete" and "substantially completed" as applied to all or part of the Work refer to Substantial Completion thereof.

45. *Successful Bidder*—The Bidder submitting a responsive Bid to whom Owner makes an award.

46. *Supplementary Conditions*—That part of the Contract Documents which amends or supplements these General Conditions.

47. *Supplier*—A manufacturer, fabricator, supplier, distributor, materialman, or vendor having a direct contract with Contractor or with any Subcontractor to furnish materials or equipment to be incorporated in the Work by Contractor or Subcontractor.

48. *Underground Facilities*—All underground pipelines, conduits, ducts, cables, wires, manholes, vaults, tanks, tunnels, or other such facilities or attachments, and any encasements containing such facilities, including those that convey electricity, gases, steam, liquid petroleum products, telephone or other communications, cable television, water, wastewater, storm water, other liquids or chemicals, or traffic or other control systems.

49. *Unit Price Work*—Work to be paid for on the basis of unit prices.

50. *Work*—The entire construction or the various separately identifiable parts thereof required to be provided under the Contract Documents. Work includes and is the result of performing or providing all labor, services, and documentation necessary to produce such construction, and furnishing, installing, and incorporating all materials and equipment into such construction, all as required by the Contract Documents.

51. *Work Change Directive*—A written statement to Contractor issued on or after the Effective Date of the Agreement and signed by Owner and recommended by Engineer ordering an

Copyright © 2007 National Society of Professional Engineers for EJCDC. All rights reserved.

addition, deletion, or revision in the Work, or responding to differing or unforeseen subsurface or physical conditions under which the Work is to be performed or to emergencies. A Work Change Directive will not change the Contract Price or the Contract Times but is evidence that the parties expect that the change ordered or documented by a Work Change Directive will be incorporated in a subsequently issued Change Order following negotiations by the parties as to its effect, if any, on the Contract Price or Contract Times.

1.02 *Terminology*

A. The words and terms discussed in Paragraph 1.02.B through F are not defined but, when used in the Bidding Requirements or Contract Documents, have the indicated meaning.

B. *Intent of Certain Terms or Adjectives:*

1. The Contract Documents include the terms "as allowed," "as approved," "as ordered," "as directed" or terms of like effect or import to authorize an exercise of professional judgment by Engineer. In addition, the adjectives "reasonable," "suitable," "acceptable," "proper," "satisfactory," or adjectives of like effect or import are used to describe an action or determination of Engineer as to the Work. It is intended that such exercise of professional judgment, action, or determination will be solely to evaluate, in general, the Work for compliance with the information in the Contract Documents and with the design concept of the Project as a functioning whole as shown or indicated in the Contract Documents (unless there is a specific statement indicating otherwise). The use of any such term or adjective is not intended to and shall not be effective to assign to Engineer any duty or authority to supervise or direct the performance of the Work, or any duty or authority to undertake responsibility contrary to the provisions of Paragraph 9.09 or any other provision of the Contract Documents.

C. *Day:*

1. The word "day" means a calendar day of 24 hours measured from midnight to the next midnight.

D. *Defective:*

1. The word "defective," when modifying the word "Work," refers to Work that is unsatisfactory, faulty, or deficient in that it:

a. does not conform to the Contract Documents; or

b. does not meet the requirements of any applicable inspection, reference standard, test, or approval referred to in the Contract Documents; or

c. has been damaged prior to Engineer's recommendation of final payment (unless responsibility for the protection thereof has been assumed by Owner at Substantial Completion in accordance with Paragraph 14.04 or 14.05).

Copyright © 2007 National Society of Professional Engineers for EJCDC. All rights reserved.

E. *Furnish, Install, Perform, Provide:*

1. The word "furnish," when used in connection with services, materials, or equipment, shall mean to supply and deliver said services, materials, or equipment to the Site (or some other specified location) ready for use or installation and in usable or operable condition.

2. The word "install," when used in connection with services, materials, or equipment, shall mean to put into use or place in final position said services, materials, or equipment complete and ready for intended use.

3. The words "perform" or "provide," when used in connection with services, materials, or equipment, shall mean to furnish and install said services, materials, or equipment complete and ready for intended use.

4. When "furnish," "install," "perform," or "provide" is not used in connection with services, materials, or equipment in a context clearly requiring an obligation of Contractor, "provide" is implied.

F. Unless stated otherwise in the Contract Documents, words or phrases that have a well-known technical or construction industry or trade meaning are used in the Contract Documents in accordance with such recognized meaning.

ARTICLE 2 – PRELIMINARY MATTERS

2.01 *Delivery of Bonds and Evidence of Insurance*

A. When Contractor delivers the executed counterparts of the Agreement to Owner, Contractor shall also deliver to Owner such bonds as Contractor may be required to furnish.

B. *Evidence of Insurance:* Before any Work at the Site is started, Contractor and Owner shall each deliver to the other, with copies to each additional insured identified in the Supplementary Conditions, certificates of insurance (and other evidence of insurance which either of them or any additional insured may reasonably request) which Contractor and Owner respectively are required to purchase and maintain in accordance with Article 5.

2.02 *Copies of Documents*

A. Owner shall furnish to Contractor up to ten printed or hard copies of the Drawings and Project Manual. Additional copies will be furnished upon request at the cost of reproduction.

2.03 *Commencement of Contract Times; Notice to Proceed*

A. The Contract Times will commence to run on the thirtieth day after the Effective Date of the Agreement or, if a Notice to Proceed is given, on the day indicated in the Notice to Proceed. A Notice to Proceed may be given at any time within 30 days after the Effective Date of the Agreement. In no event will the Contract Times commence to run later than the sixtieth day after the day of Bid opening or the thirtieth day after the Effective Date of the Agreement, whichever date is earlier.

Copyright © 2007 National Society of Professional Engineers for EJCDC. All rights reserved.

2.04 *Starting the Work*

A. Contractor shall start to perform the Work on the date when the Contract Times commence to run. No Work shall be done at the Site prior to the date on which the Contract Times commence to run.

2.05 *Before Starting Construction*

A. *Preliminary Schedules:* Within 10 days after the Effective Date of the Agreement (unless otherwise specified in the General Requirements), Contractor shall submit to Engineer for timely review:

1. a preliminary Progress Schedule indicating the times (numbers of days or dates) for starting and completing the various stages of the Work, including any Milestones specified in the Contract Documents;

2. a preliminary Schedule of Submittals; and

3. a preliminary Schedule of Values for all of the Work which includes quantities and prices of items which when added together equal the Contract Price and subdivides the Work into component parts in sufficient detail to serve as the basis for progress payments during performance of the Work. Such prices will include an appropriate amount of overhead and profit applicable to each item of Work.

2.06 *Preconstruction Conference; Designation of Authorized Representatives*

A. Before any Work at the Site is started, a conference attended by Owner, Contractor, Engineer, and others as appropriate will be held to establish a working understanding among the parties as to the Work and to discuss the schedules referred to in Paragraph 2.05.A, procedures for handling Shop Drawings and other submittals, processing Applications for Payment, and maintaining required records.

B. At this conference Owner and Contractor each shall designate, in writing, a specific individual to act as its authorized representative with respect to the services and responsibilities under the Contract. Such individuals shall have the authority to transmit instructions, receive information, render decisions relative to the Contract, and otherwise act on behalf of each respective party.

2.07 *Initial Acceptance of Schedules*

A. At least 10 days before submission of the first Application for Payment a conference attended by Contractor, Engineer, and others as appropriate will be held to review for acceptability to Engineer as provided below the schedules submitted in accordance with Paragraph 2.05.A. Contractor shall have an additional 10 days to make corrections and adjustments and to complete and resubmit the schedules. No progress payment shall be made to Contractor until acceptable schedules are submitted to Engineer.

1. The Progress Schedule will be acceptable to Engineer if it provides an orderly progression of the Work to completion within the Contract Times. Such acceptance will not impose on

Copyright © 2007 National Society of Professional Engineers for EJCDC. All rights reserved.

Engineer responsibility for the Progress Schedule, for sequencing, scheduling, or progress of the Work, nor interfere with or relieve Contractor from Contractor's full responsibility therefor.

2. Contractor's Schedule of Submittals will be acceptable to Engineer if it provides a workable arrangement for reviewing and processing the required submittals.

3. Contractor's Schedule of Values will be acceptable to Engineer as to form and substance if it provides a reasonable allocation of the Contract Price to component parts of the Work.

ARTICLE 3 – CONTRACT DOCUMENTS: INTENT, AMENDING, REUSE

3.01 *Intent*

A. The Contract Documents are complementary; what is required by one is as binding as if required by all.

B. It is the intent of the Contract Documents to describe a functionally complete project (or part thereof) to be constructed in accordance with the Contract Documents. Any labor, documentation, services, materials, or equipment that reasonably may be inferred from the Contract Documents or from prevailing custom or trade usage as being required to produce the indicated result will be provided whether or not specifically called for, at no additional cost to Owner.

C. Clarifications and interpretations of the Contract Documents shall be issued by Engineer as provided in Article 9.

3.02 *Reference Standards*

A. Standards, Specifications, Codes, Laws, and Regulations

1. Reference to standards, specifications, manuals, or codes of any technical society, organization, or association, or to Laws or Regulations, whether such reference be specific or by implication, shall mean the standard, specification, manual, code, or Laws or Regulations in effect at the time of opening of Bids (or on the Effective Date of the Agreement if there were no Bids), except as may be otherwise specifically stated in the Contract Documents.

2. No provision of any such standard, specification, manual, or code, or any instruction of a Supplier, shall be effective to change the duties or responsibilities of Owner, Contractor, or Engineer, or any of their subcontractors, consultants, agents, or employees, from those set forth in the Contract Documents. No such provision or instruction shall be effective to assign to Owner, Engineer, or any of their officers, directors, members, partners, employees, agents, consultants, or subcontractors, any duty or authority to supervise or direct the performance of the Work or any duty or authority to undertake responsibility inconsistent with the provisions of the Contract Documents.

Copyright © 2007 National Society of Professional Engineers for EJCDC. All rights reserved.

3.03 *Reporting and Resolving Discrepancies*

A. *Reporting Discrepancies:*

1. *Contractor's Review of Contract Documents Before Starting Work*: Before undertaking each part of the Work, Contractor shall carefully study and compare the Contract Documents and check and verify pertinent figures therein and all applicable field measurements. Contractor shall promptly report in writing to Engineer any conflict, error, ambiguity, or discrepancy which Contractor discovers, or has actual knowledge of, and shall obtain a written interpretation or clarification from Engineer before proceeding with any Work affected thereby.

2. *Contractor's Review of Contract Documents During Performance of Work*: If, during the performance of the Work, Contractor discovers any conflict, error, ambiguity, or discrepancy within the Contract Documents, or between the Contract Documents and (a) any applicable Law or Regulation , (b) any standard, specification, manual, or code, or (c) any instruction of any Supplier, then Contractor shall promptly report it to Engineer in writing. Contractor shall not proceed with the Work affected thereby (except in an emergency as required by Paragraph 6.16.A) until an amendment or supplement to the Contract Documents has been issued by one of the methods indicated in Paragraph 3.04.

3. Contractor shall not be liable to Owner or Engineer for failure to report any conflict, error, ambiguity, or discrepancy in the Contract Documents unless Contractor had actual knowledge thereof.

B. *Resolving Discrepancies:*

1. Except as may be otherwise specifically stated in the Contract Documents, the provisions of the Contract Documents shall take precedence in resolving any conflict, error, ambiguity, or discrepancy between the provisions of the Contract Documents and:

   a. the provisions of any standard, specification, manual, or code, or the instruction of any Supplier (whether or not specifically incorporated by reference in the Contract Documents); or

   b. the provisions of any Laws or Regulations applicable to the performance of the Work (unless such an interpretation of the provisions of the Contract Documents would result in violation of such Law or Regulation).

3.04 *Amending and Supplementing Contract Documents*

A. The Contract Documents may be amended to provide for additions, deletions, and revisions in the Work or to modify the terms and conditions thereof by either a Change Order or a Work Change Directive.

B. The requirements of the Contract Documents may be supplemented, and minor variations and deviations in the Work may be authorized, by one or more of the following ways:

Copyright © 2007 National Society of Professional Engineers for EJCDC. All rights reserved.

1. A Field Order;

2. Engineer's approval of a Shop Drawing or Sample (subject to the provisions of Paragraph 6.17.D.3); or

3. Engineer's written interpretation or clarification.

3.05 *Reuse of Documents*

A. Contractor and any Subcontractor or Supplier shall not:

1. have or acquire any title to or ownership rights in any of the Drawings, Specifications, or other documents (or copies of any thereof) prepared by or bearing the seal of Engineer or its consultants, including electronic media editions; or

2. reuse any such Drawings, Specifications, other documents, or copies thereof on extensions of the Project or any other project without written consent of Owner and Engineer and specific written verification or adaptation by Engineer.

B. The prohibitions of this Paragraph 3.05 will survive final payment, or termination of the Contract. Nothing herein shall preclude Contractor from retaining copies of the Contract Documents for record purposes.

3.06 *Electronic Data*

A. Unless otherwise stated in the Supplementary Conditions, the data furnished by Owner or Engineer to Contractor, or by Contractor to Owner or Engineer, that may be relied upon are limited to the printed copies (also known as hard copies). Files in electronic media format of text, data, graphics, or other types are furnished only for the convenience of the receiving party. Any conclusion or information obtained or derived from such electronic files will be at the user's sole risk. If there is a discrepancy between the electronic files and the hard copies, the hard copies govern.

B. Because data stored in electronic media format can deteriorate or be modified inadvertently or otherwise without authorization of the data's creator, the party receiving electronic files agrees that it will perform acceptance tests or procedures within 60 days, after which the receiving party shall be deemed to have accepted the data thus transferred. Any errors detected within the 60-day acceptance period will be corrected by the transferring party.

C. When transferring documents in electronic media format, the transferring party makes no representations as to long term compatibility, usability, or readability of documents resulting from the use of software application packages, operating systems, or computer hardware differing from those used by the data's creator.

Copyright © 2007 National Society of Professional Engineers for EJCDC. All rights reserved.

ARTICLE 4 – AVAILABILITY OF LANDS; SUBSURFACE AND PHYSICAL CONDITIONS; HAZARDOUS ENVIRONMENTAL CONDITIONS; REFERENCE POINTS

4.01 *Availability of Lands*

A. Owner shall furnish the Site. Owner shall notify Contractor of any encumbrances or restrictions not of general application but specifically related to use of the Site with which Contractor must comply in performing the Work. Owner will obtain in a timely manner and pay for easements for permanent structures or permanent changes in existing facilities. If Contractor and Owner are unable to agree on entitlement to or on the amount or extent, if any, of any adjustment in the Contract Price or Contract Times, or both, as a result of any delay in Owner's furnishing the Site or a part thereof, Contractor may make a Claim therefor as provided in Paragraph 10.05.

B. Upon reasonable written request, Owner shall furnish Contractor with a current statement of record legal title and legal description of the lands upon which the Work is to be performed and Owner's interest therein as necessary for giving notice of or filing a mechanic's or construction lien against such lands in accordance with applicable Laws and Regulations.

C. Contractor shall provide for all additional lands and access thereto that may be required for temporary construction facilities or storage of materials and equipment.

4.02 *Subsurface and Physical Conditions*

A. *Reports and Drawings:* The Supplementary Conditions identify:

1. those reports known to Owner of explorations and tests of subsurface conditions at or contiguous to the Site; and

2. those drawings known to Owner of physical conditions relating to existing surface or subsurface structures at the Site (except Underground Facilities).

B. *Limited Reliance by Contractor on Technical Data Authorized:* Contractor may rely upon the accuracy of the "technical data" contained in such reports and drawings, but such reports and drawings are not Contract Documents. Such "technical data" is identified in the Supplementary Conditions. Except for such reliance on such "technical data," Contractor may not rely upon or make any claim against Owner or Engineer, or any of their officers, directors, members, partners, employees, agents, consultants, or subcontractors with respect to:

1. the completeness of such reports and drawings for Contractor's purposes, including, but not limited to, any aspects of the means, methods, techniques, sequences, and procedures of construction to be employed by Contractor, and safety precautions and programs incident thereto; or

2. other data, interpretations, opinions, and information contained in such reports or shown or indicated in such drawings; or

3. any Contractor interpretation of or conclusion drawn from any "technical data" or any such other data, interpretations, opinions, or information.

Copyright © 2007 National Society of Professional Engineers for EJCDC. All rights reserved.

4.03 *Differing Subsurface or Physical Conditions*

A. *Notice:* If Contractor believes that any subsurface or physical condition that is uncovered or revealed either:

1. is of such a nature as to establish that any "technical data" on which Contractor is entitled to rely as provided in Paragraph 4.02 is materially inaccurate; or

2. is of such a nature as to require a change in the Contract Documents; or

3. differs materially from that shown or indicated in the Contract Documents; or

4. is of an unusual nature, and differs materially from conditions ordinarily encountered and generally recognized as inherent in work of the character provided for in the Contract Documents;

then Contractor shall, promptly after becoming aware thereof and before further disturbing the subsurface or physical conditions or performing any Work in connection therewith (except in an emergency as required by Paragraph 6.16.A), notify Owner and Engineer in writing about such condition. Contractor shall not further disturb such condition or perform any Work in connection therewith (except as aforesaid) until receipt of written order to do so.

B. *Engineer's Review*: After receipt of written notice as required by Paragraph 4.03.A, Engineer will promptly review the pertinent condition, determine the necessity of Owner's obtaining additional exploration or tests with respect thereto, and advise Owner in writing (with a copy to Contractor) of Engineer's findings and conclusions.

C. *Possible Price and Times Adjustments:*

1. The Contract Price or the Contract Times, or both, will be equitably adjusted to the extent that the existence of such differing subsurface or physical condition causes an increase or decrease in Contractor's cost of, or time required for, performance of the Work; subject, however, to the following:

   a. such condition must meet any one or more of the categories described in Paragraph 4.03.A; and

   b. with respect to Work that is paid for on a unit price basis, any adjustment in Contract Price will be subject to the provisions of Paragraphs 9.07 and 11.03.

2. Contractor shall not be entitled to any adjustment in the Contract Price or Contract Times if:

   a. Contractor knew of the existence of such conditions at the time Contractor made a final commitment to Owner with respect to Contract Price and Contract Times by the submission of a Bid or becoming bound under a negotiated contract; or

   b. the existence of such condition could reasonably have been discovered or revealed as a result of any examination, investigation, exploration, test, or study of the Site and

Copyright © 2007 National Society of Professional Engineers for EJCDC. All rights reserved.

contiguous areas required by the Bidding Requirements or Contract Documents to be conducted by or for Contractor prior to Contractor's making such final commitment; or

c. Contractor failed to give the written notice as required by Paragraph 4.03.A.

3. If Owner and Contractor are unable to agree on entitlement to or on the amount or extent, if any, of any adjustment in the Contract Price or Contract Times, or both, a Claim may be made therefor as provided in Paragraph 10.05. However, neither Owner or Engineer, or any of their officers, directors, members, partners, employees, agents, consultants, or subcontractors shall be liable to Contractor for any claims, costs, losses, or damages (including but not limited to all fees and charges of engineers, architects, attorneys, and other professionals and all court or arbitration or other dispute resolution costs) sustained by Contractor on or in connection with any other project or anticipated project.

4.04 *Underground Facilities*

A. *Shown or Indicated:* The information and data shown or indicated in the Contract Documents with respect to existing Underground Facilities at or contiguous to the Site is based on information and data furnished to Owner or Engineer by the owners of such Underground Facilities, including Owner, or by others. Unless it is otherwise expressly provided in the Supplementary Conditions:

1. Owner and Engineer shall not be responsible for the accuracy or completeness of any such information or data provided by others; and

2. the cost of all of the following will be included in the Contract Price, and Contractor shall have full responsibility for:

a. reviewing and checking all such information and data;

b. locating all Underground Facilities shown or indicated in the Contract Documents;

c. coordination of the Work with the owners of such Underground Facilities, including Owner, during construction; and

d. the safety and protection of all such Underground Facilities and repairing any damage thereto resulting from the Work.

B. *Not Shown or Indicated:*

1. If an Underground Facility is uncovered or revealed at or contiguous to the Site which was not shown or indicated, or not shown or indicated with reasonable accuracy in the Contract Documents, Contractor shall, promptly after becoming aware thereof and before further disturbing conditions affected thereby or performing any Work in connection therewith (except in an emergency as required by Paragraph 6.16.A), identify the owner of such Underground Facility and give written notice to that owner and to Owner and Engineer. Engineer will promptly review the Underground Facility and determine the extent, if any, to which a change is required in the Contract Documents to reflect and document the

Copyright © 2007 National Society of Professional Engineers for EJCDC. All rights reserved.

consequences of the existence or location of the Underground Facility. During such time, Contractor shall be responsible for the safety and protection of such Underground Facility.

2. If Engineer concludes that a change in the Contract Documents is required, a Work Change Directive or a Change Order will be issued to reflect and document such consequences. An equitable adjustment shall be made in the Contract Price or Contract Times, or both, to the extent that they are attributable to the existence or location of any Underground Facility that was not shown or indicated or not shown or indicated with reasonable accuracy in the Contract Documents and that Contractor did not know of and could not reasonably have been expected to be aware of or to have anticipated. If Owner and Contractor are unable to agree on entitlement to or on the amount or extent, if any, of any such adjustment in Contract Price or Contract Times, Owner or Contractor may make a Claim therefor as provided in Paragraph 10.05.

4.05 *Reference Points*

A. Owner shall provide engineering surveys to establish reference points for construction which in Engineer's judgment are necessary to enable Contractor to proceed with the Work. Contractor shall be responsible for laying out the Work, shall protect and preserve the established reference points and property monuments, and shall make no changes or relocations without the prior written approval of Owner. Contractor shall report to Engineer whenever any reference point or property monument is lost or destroyed or requires relocation because of necessary changes in grades or locations, and shall be responsible for the accurate replacement or relocation of such reference points or property monuments by professionally qualified personnel.

4.06 *Hazardous Environmental Condition at Site*

A. *Reports and Drawings:* The Supplementary Conditions identify those reports and drawings known to Owner relating to Hazardous Environmental Conditions that have been identified at the Site.

B. *Limited Reliance by Contractor on Technical Data Authorized:* Contractor may rely upon the accuracy of the "technical data" contained in such reports and drawings, but such reports and drawings are not Contract Documents. Such "technical data" is identified in the Supplementary Conditions. Except for such reliance on such "technical data," Contractor may not rely upon or make any claim against Owner or Engineer, or any of their officers, directors, members, partners, employees, agents, consultants, or subcontractors with respect to:

1. the completeness of such reports and drawings for Contractor's purposes, including, but not limited to, any aspects of the means, methods, techniques, sequences and procedures of construction to be employed by Contractor and safety precautions and programs incident thereto; or

2. other data, interpretations, opinions and information contained in such reports or shown or indicated in such drawings; or

3. any Contractor interpretation of or conclusion drawn from any "technical data" or any such other data, interpretations, opinions or information.

Copyright © 2007 National Society of Professional Engineers for EJCDC. All rights reserved.

C. Contractor shall not be responsible for any Hazardous Environmental Condition uncovered or revealed at the Site which was not shown or indicated in Drawings or Specifications or identified in the Contract Documents to be within the scope of the Work. Contractor shall be responsible for a Hazardous Environmental Condition created with any materials brought to the Site by Contractor, Subcontractors, Suppliers, or anyone else for whom Contractor is responsible.

D. If Contractor encounters a Hazardous Environmental Condition or if Contractor or anyone for whom Contractor is responsible creates a Hazardous Environmental Condition, Contractor shall immediately: (i) secure or otherwise isolate such condition; (ii) stop all Work in connection with such condition and in any area affected thereby (except in an emergency as required by Paragraph 6.16.A); and (iii) notify Owner and Engineer (and promptly thereafter confirm such notice in writing). Owner shall promptly consult with Engineer concerning the necessity for Owner to retain a qualified expert to evaluate such condition or take corrective action, if any. Promptly after consulting with Engineer, Owner shall take such actions as are necessary to permit Owner to timely obtain required permits and provide Contractor the written notice required by Paragraph 4.06.E.

E. Contractor shall not be required to resume Work in connection with such condition or in any affected area until after Owner has obtained any required permits related thereto and delivered written notice to Contractor: (i) specifying that such condition and any affected area is or has been rendered safe for the resumption of Work; or (ii) specifying any special conditions under which such Work may be resumed safely. If Owner and Contractor cannot agree as to entitlement to or on the amount or extent, if any, of any adjustment in Contract Price or Contract Times, or both, as a result of such Work stoppage or such special conditions under which Work is agreed to be resumed by Contractor, either party may make a Claim therefor as provided in Paragraph 10.05.

F. If after receipt of such written notice Contractor does not agree to resume such Work based on a reasonable belief it is unsafe, or does not agree to resume such Work under such special conditions, then Owner may order the portion of the Work that is in the area affected by such condition to be deleted from the Work. If Owner and Contractor cannot agree as to entitlement to or on the amount or extent, if any, of an adjustment in Contract Price or Contract Times as a result of deleting such portion of the Work, then either party may make a Claim therefor as provided in Paragraph 10.05. Owner may have such deleted portion of the Work performed by Owner's own forces or others in accordance with Article 7.

G. To the fullest extent permitted by Laws and Regulations, Owner shall indemnify and hold harmless Contractor, Subcontractors, and Engineer, and the officers, directors, members, partners, employees, agents, consultants, and subcontractors of each and any of them from and against all claims, costs, losses, and damages (including but not limited to all fees and charges of engineers, architects, attorneys, and other professionals and all court or arbitration or other dispute resolution costs) arising out of or relating to a Hazardous Environmental Condition, provided that such Hazardous Environmental Condition: (i) was not shown or indicated in the Drawings or Specifications or identified in the Contract Documents to be included within the scope of the Work, and (ii) was not created by Contractor or by anyone for whom Contractor is responsible. Nothing in this Paragraph 4.06.G shall obligate Owner to indemnify any individual or entity from and against the consequences of that individual's or entity's own negligence.

Copyright © 2007 National Society of Professional Engineers for EJCDC. All rights reserved.

H. To the fullest extent permitted by Laws and Regulations, Contractor shall indemnify and hold harmless Owner and Engineer, and the officers, directors, members, partners, employees, agents, consultants, and subcontractors of each and any of them from and against all claims, costs, losses, and damages (including but not limited to all fees and charges of engineers, architects, attorneys, and other professionals and all court or arbitration or other dispute resolution costs) arising out of or relating to a Hazardous Environmental Condition created by Contractor or by anyone for whom Contractor is responsible. Nothing in this Paragraph 4.06.H shall obligate Contractor to indemnify any individual or entity from and against the consequences of that individual's or entity's own negligence.

I. The provisions of Paragraphs 4.02, 4.03, and 4.04 do not apply to a Hazardous Environmental Condition uncovered or revealed at the Site.

ARTICLE 5 – BONDS AND INSURANCE

5.01 *Performance, Payment, and Other Bonds*

A. Contractor shall furnish performance and payment bonds, each in an amount at least equal to the Contract Price as security for the faithful performance and payment of all of Contractor's obligations under the Contract Documents. These bonds shall remain in effect until one year after the date when final payment becomes due or until completion of the correction period specified in Paragraph 13.07, whichever is later, except as provided otherwise by Laws or Regulations or by the Contract Documents. Contractor shall also furnish such other bonds as are required by the Contract Documents.

B. All bonds shall be in the form prescribed by the Contract Documents except as provided otherwise by Laws or Regulations, and shall be executed by such sureties as are named in the list of "Companies Holding Certificates of Authority as Acceptable Sureties on Federal Bonds and as Acceptable Reinsuring Companies" as published in Circular 570 (amended) by the Financial Management Service, Surety Bond Branch, U.S. Department of the Treasury. All bonds signed by an agent or attorney-in-fact must be accompanied by a certified copy of that individual's authority to bind the surety. The evidence of authority shall show that it is effective on the date the agent or attorney-in-fact signed each bond.

C. If the surety on any bond furnished by Contractor is declared bankrupt or becomes insolvent or its right to do business is terminated in any state where any part of the Project is located or it ceases to meet the requirements of Paragraph 5.01.B, Contractor shall promptly notify Owner and Engineer and shall, within 20 days after the event giving rise to such notification, provide another bond and surety, both of which shall comply with the requirements of Paragraphs 5.01.B and 5.02.

5.02 *Licensed Sureties and Insurers*

A. All bonds and insurance required by the Contract Documents to be purchased and maintained by Owner or Contractor shall be obtained from surety or insurance companies that are duly licensed or authorized in the jurisdiction in which the Project is located to issue bonds or insurance policies for the limits and coverages so required. Such surety and insurance companies shall also

Copyright © 2007 National Society of Professional Engineers for EJCDC. All rights reserved.

meet such additional requirements and qualifications as may be provided in the Supplementary Conditions.

5.03 *Certificates of Insurance*

A. Contractor shall deliver to Owner, with copies to each additional insured and loss payee identified in the Supplementary Conditions, certificates of insurance (and other evidence of insurance requested by Owner or any other additional insured) which Contractor is required to purchase and maintain.

B. Owner shall deliver to Contractor, with copies to each additional insured and loss payee identified in the Supplementary Conditions, certificates of insurance (and other evidence of insurance requested by Contractor or any other additional insured) which Owner is required to purchase and maintain.

C. Failure of Owner to demand such certificates or other evidence of Contractor's full compliance with these insurance requirements or failure of Owner to identify a deficiency in compliance from the evidence provided shall not be construed as a waiver of Contractor's obligation to maintain such insurance.

D. Owner does not represent that insurance coverage and limits established in this Contract necessarily will be adequate to protect Contractor.

E. The insurance and insurance limits required herein shall not be deemed as a limitation on Contractor's liability under the indemnities granted to Owner in the Contract Documents.

5.04 *Contractor's Insurance*

A. Contractor shall purchase and maintain such insurance as is appropriate for the Work being performed and as will provide protection from claims set forth below which may arise out of or result from Contractor's performance of the Work and Contractor's other obligations under the Contract Documents, whether it is to be performed by Contractor, any Subcontractor or Supplier, or by anyone directly or indirectly employed by any of them to perform any of the Work, or by anyone for whose acts any of them may be liable:

1. claims under workers' compensation, disability benefits, and other similar employee benefit acts;

2. claims for damages because of bodily injury, occupational sickness or disease, or death of Contractor's employees;

3. claims for damages because of bodily injury, sickness or disease, or death of any person other than Contractor's employees;

4. claims for damages insured by reasonably available personal injury liability coverage which are sustained:

Copyright © 2007 National Society of Professional Engineers for EJCDC. All rights reserved.

a. by any person as a result of an offense directly or indirectly related to the employment of such person by Contractor, or

b. by any other person for any other reason;

5. claims for damages, other than to the Work itself, because of injury to or destruction of tangible property wherever located, including loss of use resulting therefrom; and

6. claims for damages because of bodily injury or death of any person or property damage arising out of the ownership, maintenance or use of any motor vehicle.

B. The policies of insurance required by this Paragraph 5.04 shall:

1. with respect to insurance required by Paragraphs 5.04.A.3 through 5.04.A.6 inclusive, be written on an occurrence basis, include as additional insureds (subject to any customary exclusion regarding professional liability) Owner and Engineer, and any other individuals or entities identified in the Supplementary Conditions, all of whom shall be listed as additional insureds, and include coverage for the respective officers, directors, members, partners, employees, agents, consultants, and subcontractors of each and any of all such additional insureds, and the insurance afforded to these additional insureds shall provide primary coverage for all claims covered thereby;

2. include at least the specific coverages and be written for not less than the limits of liability provided in the Supplementary Conditions or required by Laws or Regulations, whichever is greater;

3. include contractual liability insurance covering Contractor's indemnity obligations under Paragraphs 6.11 and 6.20;

4. contain a provision or endorsement that the coverage afforded will not be canceled, materially changed or renewal refused until at least 30 days prior written notice has been given to Owner and Contractor and to each other additional insured identified in the Supplementary Conditions to whom a certificate of insurance has been issued (and the certificates of insurance furnished by the Contractor pursuant to Paragraph 5.03 will so provide);

5. remain in effect at least until final payment and at all times thereafter when Contractor may be correcting, removing, or replacing defective Work in accordance with Paragraph 13.07; and

6. include completed operations coverage:

a. Such insurance shall remain in effect for two years after final payment.

b. Contractor shall furnish Owner and each other additional insured identified in the Supplementary Conditions, to whom a certificate of insurance has been issued, evidence satisfactory to Owner and any such additional insured of continuation of such insurance at final payment and one year thereafter.

Copyright © 2007 National Society of Professional Engineers for EJCDC. All rights reserved.

5.05 *Owner's Liability Insurance*

A. In addition to the insurance required to be provided by Contractor under Paragraph 5.04, Owner, at Owner's option, may purchase and maintain at Owner's expense Owner's own liability insurance as will protect Owner against claims which may arise from operations under the Contract Documents.

5.06 *Property Insurance*

A. Unless otherwise provided in the Supplementary Conditions, Owner shall purchase and maintain property insurance upon the Work at the Site in the amount of the full replacement cost thereof (subject to such deductible amounts as may be provided in the Supplementary Conditions or required by Laws and Regulations). This insurance shall:

1. include the interests of Owner, Contractor, Subcontractors, and Engineer, and any other individuals or entities identified in the Supplementary Conditions, and the officers, directors, members, partners, employees, agents, consultants, and subcontractors of each and any of them, each of whom is deemed to have an insurable interest and shall be listed as a loss payee;

2. be written on a Builder's Risk "all-risk" policy form that shall at least include insurance for physical loss or damage to the Work, temporary buildings, falsework, and materials and equipment in transit, and shall insure against at least the following perils or causes of loss: fire, lightning, extended coverage, theft, vandalism and malicious mischief, earthquake, collapse, debris removal, demolition occasioned by enforcement of Laws and Regulations, water damage (other than that caused by flood), and such other perils or causes of loss as may be specifically required by the Supplementary Conditions.

3. include expenses incurred in the repair or replacement of any insured property (including but not limited to fees and charges of engineers and architects);

4. cover materials and equipment stored at the Site or at another location that was agreed to in writing by Owner prior to being incorporated in the Work, provided that such materials and equipment have been included in an Application for Payment recommended by Engineer;

5. allow for partial utilization of the Work by Owner;

6. include testing and startup; and

7. be maintained in effect until final payment is made unless otherwise agreed to in writing by Owner, Contractor, and Engineer with 30 days written notice to each other loss payee to whom a certificate of insurance has been issued.

B. Owner shall purchase and maintain such equipment breakdown insurance or additional property insurance as may be required by the Supplementary Conditions or Laws and Regulations which will include the interests of Owner, Contractor, Subcontractors, and Engineer, and any other individuals or entities identified in the Supplementary Conditions, and the officers, directors,

Copyright © 2007 National Society of Professional Engineers for EJCDC. All rights reserved.

members, partners, employees, agents, consultants and subcontractors of each and any of them, each of whom is deemed to have an insurable interest and shall be listed as a loss payee.

C. All the policies of insurance (and the certificates or other evidence thereof) required to be purchased and maintained in accordance with this Paragraph 5.06 will contain a provision or endorsement that the coverage afforded will not be canceled or materially changed or renewal refused until at least 30 days prior written notice has been given to Owner and Contractor and to each other loss payee to whom a certificate of insurance has been issued and will contain waiver provisions in accordance with Paragraph 5.07.

D. Owner shall not be responsible for purchasing and maintaining any property insurance specified in this Paragraph 5.06 to protect the interests of Contractor, Subcontractors, or others in the Work to the extent of any deductible amounts that are identified in the Supplementary Conditions. The risk of loss within such identified deductible amount will be borne by Contractor, Subcontractors, or others suffering any such loss, and if any of them wishes property insurance coverage within the limits of such amounts, each may purchase and maintain it at the purchaser's own expense.

E. If Contractor requests in writing that other special insurance be included in the property insurance policies provided under this Paragraph 5.06, Owner shall, if possible, include such insurance, and the cost thereof will be charged to Contractor by appropriate Change Order. Prior to commencement of the Work at the Site, Owner shall in writing advise Contractor whether or not such other insurance has been procured by Owner.

5.07 *Waiver of Rights*

A. Owner and Contractor intend that all policies purchased in accordance with Paragraph 5.06 will protect Owner, Contractor, Subcontractors, and Engineer, and all other individuals or entities identified in the Supplementary Conditions as loss payees (and the officers, directors, members, partners, employees, agents, consultants, and subcontractors of each and any of them) in such policies and will provide primary coverage for all losses and damages caused by the perils or causes of loss covered thereby. All such policies shall contain provisions to the effect that in the event of payment of any loss or damage the insurers will have no rights of recovery against any of the insureds or loss payees thereunder. Owner and Contractor waive all rights against each other and their respective officers, directors, members, partners, employees, agents, consultants and subcontractors of each and any of them for all losses and damages caused by, arising out of or resulting from any of the perils or causes of loss covered by such policies and any other property insurance applicable to the Work; and, in addition, waive all such rights against Subcontractors and Engineer, and all other individuals or entities identified in the Supplementary Conditions as loss payees (and the officers, directors, members, partners, employees, agents, consultants, and subcontractors of each and any of them) under such policies for losses and damages so caused. None of the above waivers shall extend to the rights that any party making such waiver may have to the proceeds of insurance held by Owner as trustee or otherwise payable under any policy so issued.

B. Owner waives all rights against Contractor, Subcontractors, and Engineer, and the officers, directors, members, partners, employees, agents, consultants and subcontractors of each and any of them for:

Copyright © 2007 National Society of Professional Engineers for EJCDC. All rights reserved.

1. loss due to business interruption, loss of use, or other consequential loss extending beyond direct physical loss or damage to Owner's property or the Work caused by, arising out of, or resulting from fire or other perils whether or not insured by Owner; and

2. loss or damage to the completed Project or part thereof caused by, arising out of, or resulting from fire or other insured peril or cause of loss covered by any property insurance maintained on the completed Project or part thereof by Owner during partial utilization pursuant to Paragraph 14.05, after Substantial Completion pursuant to Paragraph 14.04, or after final payment pursuant to Paragraph 14.07.

C. Any insurance policy maintained by Owner covering any loss, damage or consequential loss referred to in Paragraph 5.07.B shall contain provisions to the effect that in the event of payment of any such loss, damage, or consequential loss, the insurers will have no rights of recovery against Contractor, Subcontractors, or Engineer, and the officers, directors, members, partners, employees, agents, consultants and subcontractors of each and any of them.

5.08 *Receipt and Application of Insurance Proceeds*

A. Any insured loss under the policies of insurance required by Paragraph 5.06 will be adjusted with Owner and made payable to Owner as fiduciary for the loss payees, as their interests may appear, subject to the requirements of any applicable mortgage clause and of Paragraph 5.08.B. Owner shall deposit in a separate account any money so received and shall distribute it in accordance with such agreement as the parties in interest may reach. If no other special agreement is reached, the damaged Work shall be repaired or replaced, the moneys so received applied on account thereof, and the Work and the cost thereof covered by an appropriate Change Order.

B. Owner as fiduciary shall have power to adjust and settle any loss with the insurers unless one of the parties in interest shall object in writing within 15 days after the occurrence of loss to Owner's exercise of this power. If such objection be made, Owner as fiduciary shall make settlement with the insurers in accordance with such agreement as the parties in interest may reach. If no such agreement among the parties in interest is reached, Owner as fiduciary shall adjust and settle the loss with the insurers and, if required in writing by any party in interest, Owner as fiduciary shall give bond for the proper performance of such duties.

5.09 *Acceptance of Bonds and Insurance; Option to Replace*

A. If either Owner or Contractor has any objection to the coverage afforded by or other provisions of the bonds or insurance required to be purchased and maintained by the other party in accordance with Article 5 on the basis of non-conformance with the Contract Documents, the objecting party shall so notify the other party in writing within 10 days after receipt of the certificates (or other evidence requested) required by Paragraph 2.01.B. Owner and Contractor shall each provide to the other such additional information in respect of insurance provided as the other may reasonably request. If either party does not purchase or maintain all of the bonds and insurance required of such party by the Contract Documents, such party shall notify the other party in writing of such failure to purchase prior to the start of the Work, or of such failure to maintain prior to any change in the required coverage. Without prejudice to any other right or remedy, the other party may elect to obtain equivalent bonds or insurance to protect such other party's

Copyright © 2007 National Society of Professional Engineers for EJCDC. All rights reserved.

interests at the expense of the party who was required to provide such coverage, and a Change Order shall be issued to adjust the Contract Price accordingly.

5.10 *Partial Utilization, Acknowledgment of Property Insurer*

A. If Owner finds it necessary to occupy or use a portion or portions of the Work prior to Substantial Completion of all the Work as provided in Paragraph 14.05, no such use or occupancy shall commence before the insurers providing the property insurance pursuant to Paragraph 5.06 have acknowledged notice thereof and in writing effected any changes in coverage necessitated thereby. The insurers providing the property insurance shall consent by endorsement on the policy or policies, but the property insurance shall not be canceled or permitted to lapse on account of any such partial use or occupancy.

ARTICLE 6 – CONTRACTOR'S RESPONSIBILITIES

6.01 *Supervision and Superintendence*

A. Contractor shall supervise, inspect, and direct the Work competently and efficiently, devoting such attention thereto and applying such skills and expertise as may be necessary to perform the Work in accordance with the Contract Documents. Contractor shall be solely responsible for the means, methods, techniques, sequences, and procedures of construction. Contractor shall not be responsible for the negligence of Owner or Engineer in the design or specification of a specific means, method, technique, sequence, or procedure of construction which is shown or indicated in and expressly required by the Contract Documents.

B. At all times during the progress of the Work, Contractor shall assign a competent resident superintendent who shall not be replaced without written notice to Owner and Engineer except under extraordinary circumstances.

6.02 *Labor; Working Hours*

A. Contractor shall provide competent, suitably qualified personnel to survey and lay out the Work and perform construction as required by the Contract Documents. Contractor shall at all times maintain good discipline and order at the Site.

B. Except as otherwise required for the safety or protection of persons or the Work or property at the Site or adjacent thereto, and except as otherwise stated in the Contract Documents, all Work at the Site shall be performed during regular working hours. Contractor will not permit the performance of Work on a Saturday, Sunday, or any legal holiday without Owner's written consent (which will not be unreasonably withheld) given after prior written notice to Engineer.

6.03 *Services, Materials, and Equipment*

A. Unless otherwise specified in the Contract Documents, Contractor shall provide and assume full responsibility for all services, materials, equipment, labor, transportation, construction equipment and machinery, tools, appliances, fuel, power, light, heat, telephone, water, sanitary facilities, temporary facilities, and all other facilities and incidentals necessary for the performance, testing, start-up, and completion of the Work.

Copyright © 2007 National Society of Professional Engineers for EJCDC. All rights reserved.

B. All materials and equipment incorporated into the Work shall be as specified or, if not specified, shall be of good quality and new, except as otherwise provided in the Contract Documents. All special warranties and guarantees required by the Specifications shall expressly run to the benefit of Owner. If required by Engineer, Contractor shall furnish satisfactory evidence (including reports of required tests) as to the source, kind, and quality of materials and equipment.

C. All materials and equipment shall be stored, applied, installed, connected, erected, protected, used, cleaned, and conditioned in accordance with instructions of the applicable Supplier, except as otherwise may be provided in the Contract Documents.

6.04 *Progress Schedule*

A. Contractor shall adhere to the Progress Schedule established in accordance with Paragraph 2.07 as it may be adjusted from time to time as provided below.

1. Contractor shall submit to Engineer for acceptance (to the extent indicated in Paragraph 2.07) proposed adjustments in the Progress Schedule that will not result in changing the Contract Times. Such adjustments will comply with any provisions of the General Requirements applicable thereto.

2. Proposed adjustments in the Progress Schedule that will change the Contract Times shall be submitted in accordance with the requirements of Article 12. Adjustments in Contract Times may only be made by a Change Order.

6.05 *Substitutes and "Or-Equals"*

A. Whenever an item of material or equipment is specified or described in the Contract Documents by using the name of a proprietary item or the name of a particular Supplier, the specification or description is intended to establish the type, function, appearance, and quality required. Unless the specification or description contains or is followed by words reading that no like, equivalent, or "or-equal" item or no substitution is permitted, other items of material or equipment or material or equipment of other Suppliers may be submitted to Engineer for review under the circumstances described below.

1. *"Or-Equal" Items:* If in Engineer's sole discretion an item of material or equipment proposed by Contractor is functionally equal to that named and sufficiently similar so that no change in related Work will be required, it may be considered by Engineer as an "or-equal" item, in which case review and approval of the proposed item may, in Engineer's sole discretion, be accomplished without compliance with some or all of the requirements for approval of proposed substitute items. For the purposes of this Paragraph 6.05.A.1, a proposed item of material or equipment will be considered functionally equal to an item so named if:

a. in the exercise of reasonable judgment Engineer determines that:

1) it is at least equal in materials of construction, quality, durability, appearance, strength, and design characteristics;

Copyright © 2007 National Society of Professional Engineers for EJCDC. All rights reserved.

2) it will reliably perform at least equally well the function and achieve the results imposed by the design concept of the completed Project as a functioning whole; and

3) it has a proven record of performance and availability of responsive service.

b. Contractor certifies that, if approved and incorporated into the Work:

1) there will be no increase in cost to the Owner or increase in Contract Times; and

2) it will conform substantially to the detailed requirements of the item named in the Contract Documents.

2. *Substitute Items:*

a. If in Engineer's sole discretion an item of material or equipment proposed by Contractor does not qualify as an "or-equal" item under Paragraph 6.05.A.1, it will be considered a proposed substitute item.

b. Contractor shall submit sufficient information as provided below to allow Engineer to determine if the item of material or equipment proposed is essentially equivalent to that named and an acceptable substitute therefor. Requests for review of proposed substitute items of material or equipment will not be accepted by Engineer from anyone other than Contractor.

c. The requirements for review by Engineer will be as set forth in Paragraph 6.05.A.2.d, as supplemented by the General Requirements, and as Engineer may decide is appropriate under the circumstances.

d. Contractor shall make written application to Engineer for review of a proposed substitute item of material or equipment that Contractor seeks to furnish or use. The application:

1) shall certify that the proposed substitute item will:

a) perform adequately the functions and achieve the results called for by the general design,

b) be similar in substance to that specified, and

c) be suited to the same use as that specified;

2) will state:

a) the extent, if any, to which the use of the proposed substitute item will prejudice Contractor's achievement of Substantial Completion on time,

b) whether use of the proposed substitute item in the Work will require a change in any of the Contract Documents (or in the provisions of any other direct contract with Owner for other work on the Project) to adapt the design to the proposed substitute item, and

Copyright © 2007 National Society of Professional Engineers for EJCDC. All rights reserved.

c) whether incorporation or use of the proposed substitute item in connection with the Work is subject to payment of any license fee or royalty;

3) will identify:

a) all variations of the proposed substitute item from that specified, and

b) available engineering, sales, maintenance, repair, and replacement services; and

4) shall contain an itemized estimate of all costs or credits that will result directly or indirectly from use of such substitute item, including costs of redesign and claims of other contractors affected by any resulting change.

B. *Substitute Construction Methods or Procedures:* If a specific means, method, technique, sequence, or procedure of construction is expressly required by the Contract Documents, Contractor may furnish or utilize a substitute means, method, technique, sequence, or procedure of construction approved by Engineer. Contractor shall submit sufficient information to allow Engineer, in Engineer's sole discretion, to determine that the substitute proposed is equivalent to that expressly called for by the Contract Documents. The requirements for review by Engineer will be similar to those provided in Paragraph 6.05.A.2.

C. *Engineer's Evaluation:* Engineer will be allowed a reasonable time within which to evaluate each proposal or submittal made pursuant to Paragraphs 6.05.A and 6.05.B. Engineer may require Contractor to furnish additional data about the proposed substitute item. Engineer will be the sole judge of acceptability. No "or equal" or substitute will be ordered, installed or utilized until Engineer's review is complete, which will be evidenced by a Change Order in the case of a substitute and an approved Shop Drawing for an "or equal." Engineer will advise Contractor in writing of any negative determination.

D. *Special Guarantee:* Owner may require Contractor to furnish at Contractor's expense a special performance guarantee or other surety with respect to any substitute.

E. *Engineer's Cost Reimbursement*: Engineer will record Engineer's costs in evaluating a substitute proposed or submitted by Contractor pursuant to Paragraphs 6.05.A.2 and 6.05.B. Whether or not Engineer approves a substitute so proposed or submitted by Contractor, Contractor shall reimburse Owner for the reasonable charges of Engineer for evaluating each such proposed substitute. Contractor shall also reimburse Owner for the reasonable charges of Engineer for making changes in the Contract Documents (or in the provisions of any other direct contract with Owner) resulting from the acceptance of each proposed substitute.

F. *Contractor's Expense*: Contractor shall provide all data in support of any proposed substitute or "or-equal" at Contractor's expense.

6.06 *Concerning Subcontractors, Suppliers, and Others*

A. Contractor shall not employ any Subcontractor, Supplier, or other individual or entity (including those acceptable to Owner as indicated in Paragraph 6.06.B), whether initially or as a replacement, against whom Owner may have reasonable objection. Contractor shall not be

Copyright © 2007 National Society of Professional Engineers for EJCDC. All rights reserved.

required to employ any Subcontractor, Supplier, or other individual or entity to furnish or perform any of the Work against whom Contractor has reasonable objection.

B. If the Supplementary Conditions require the identity of certain Subcontractors, Suppliers, or other individuals or entities to be submitted to Owner in advance for acceptance by Owner by a specified date prior to the Effective Date of the Agreement, and if Contractor has submitted a list thereof in accordance with the Supplementary Conditions, Owner's acceptance (either in writing or by failing to make written objection thereto by the date indicated for acceptance or objection in the Bidding Documents or the Contract Documents) of any such Subcontractor, Supplier, or other individual or entity so identified may be revoked on the basis of reasonable objection after due investigation. Contractor shall submit an acceptable replacement for the rejected Subcontractor, Supplier, or other individual or entity, and the Contract Price will be adjusted by the difference in the cost occasioned by such replacement, and an appropriate Change Order will be issued. No acceptance by Owner of any such Subcontractor, Supplier, or other individual or entity, whether initially or as a replacement, shall constitute a waiver of any right of Owner or Engineer to reject defective Work.

C. Contractor shall be fully responsible to Owner and Engineer for all acts and omissions of the Subcontractors, Suppliers, and other individuals or entities performing or furnishing any of the Work just as Contractor is responsible for Contractor's own acts and omissions. Nothing in the Contract Documents:

1. shall create for the benefit of any such Subcontractor, Supplier, or other individual or entity any contractual relationship between Owner or Engineer and any such Subcontractor, Supplier or other individual or entity; nor

2. shall create any obligation on the part of Owner or Engineer to pay or to see to the payment of any moneys due any such Subcontractor, Supplier, or other individual or entity except as may otherwise be required by Laws and Regulations.

D. Contractor shall be solely responsible for scheduling and coordinating the Work of Subcontractors, Suppliers, and other individuals or entities performing or furnishing any of the Work under a direct or indirect contract with Contractor.

E. Contractor shall require all Subcontractors, Suppliers, and such other individuals or entities performing or furnishing any of the Work to communicate with Engineer through Contractor.

F. The divisions and sections of the Specifications and the identifications of any Drawings shall not control Contractor in dividing the Work among Subcontractors or Suppliers or delineating the Work to be performed by any specific trade.

G. All Work performed for Contractor by a Subcontractor or Supplier will be pursuant to an appropriate agreement between Contractor and the Subcontractor or Supplier which specifically binds the Subcontractor or Supplier to the applicable terms and conditions of the Contract Documents for the benefit of Owner and Engineer. Whenever any such agreement is with a Subcontractor or Supplier who is listed as a loss payee on the property insurance provided in Paragraph 5.06, the agreement between the Contractor and the Subcontractor or Supplier will contain provisions whereby the Subcontractor or Supplier waives all rights against Owner,

Copyright © 2007 National Society of Professional Engineers for EJCDC. All rights reserved.

Contractor, Engineer, and all other individuals or entities identified in the Supplementary Conditions to be listed as insureds or loss payees (and the officers, directors, members, partners, employees, agents, consultants, and subcontractors of each and any of them) for all losses and damages caused by, arising out of, relating to, or resulting from any of the perils or causes of loss covered by such policies and any other property insurance applicable to the Work. If the insurers on any such policies require separate waiver forms to be signed by any Subcontractor or Supplier, Contractor will obtain the same.

6.07 *Patent Fees and Royalties*

A. Contractor shall pay all license fees and royalties and assume all costs incident to the use in the performance of the Work or the incorporation in the Work of any invention, design, process, product, or device which is the subject of patent rights or copyrights held by others. If a particular invention, design, process, product, or device is specified in the Contract Documents for use in the performance of the Work and if, to the actual knowledge of Owner or Engineer, its use is subject to patent rights or copyrights calling for the payment of any license fee or royalty to others, the existence of such rights shall be disclosed by Owner in the Contract Documents.

B. To the fullest extent permitted by Laws and Regulations, Owner shall indemnify and hold harmless Contractor, and its officers, directors, members, partners, employees, agents, consultants, and subcontractors from and against all claims, costs, losses, and damages (including but not limited to all fees and charges of engineers, architects, attorneys, and other professionals, and all court or arbitration or other dispute resolution costs) arising out of or relating to any infringement of patent rights or copyrights incident to the use in the performance of the Work or resulting from the incorporation in the Work of any invention, design, process, product, or device specified in the Contract Documents, but not identified as being subject to payment of any license fee or royalty to others required by patent rights or copyrights.

C. To the fullest extent permitted by Laws and Regulations, Contractor shall indemnify and hold harmless Owner and Engineer, and the officers, directors, members, partners, employees, agents, consultants and subcontractors of each and any of them from and against all claims, costs, losses, and damages (including but not limited to all fees and charges of engineers, architects, attorneys, and other professionals and all court or arbitration or other dispute resolution costs) arising out of or relating to any infringement of patent rights or copyrights incident to the use in the performance of the Work or resulting from the incorporation in the Work of any invention, design, process, product, or device not specified in the Contract Documents.

6.08 *Permits*

A. Unless otherwise provided in the Supplementary Conditions, Contractor shall obtain and pay for all construction permits and licenses. Owner shall assist Contractor, when necessary, in obtaining such permits and licenses. Contractor shall pay all governmental charges and inspection fees necessary for the prosecution of the Work which are applicable at the time of opening of Bids, or, if there are no Bids, on the Effective Date of the Agreement. Owner shall pay all charges of utility owners for connections for providing permanent service to the Work.

Copyright © 2007 National Society of Professional Engineers for EJCDC. All rights reserved.

6.09 *Laws and Regulations*

A. Contractor shall give all notices required by and shall comply with all Laws and Regulations applicable to the performance of the Work. Except where otherwise expressly required by applicable Laws and Regulations, neither Owner nor Engineer shall be responsible for monitoring Contractor's compliance with any Laws or Regulations.

B. If Contractor performs any Work knowing or having reason to know that it is contrary to Laws or Regulations, Contractor shall bear all claims, costs, losses, and damages (including but not limited to all fees and charges of engineers, architects, attorneys, and other professionals and all court or arbitration or other dispute resolution costs) arising out of or relating to such Work. However, it shall not be Contractor's responsibility to make certain that the Specifications and Drawings are in accordance with Laws and Regulations, but this shall not relieve Contractor of Contractor's obligations under Paragraph 3.03.

C. Changes in Laws or Regulations not known at the time of opening of Bids (or, on the Effective Date of the Agreement if there were no Bids) having an effect on the cost or time of performance of the Work shall be the subject of an adjustment in Contract Price or Contract Times. If Owner and Contractor are unable to agree on entitlement to or on the amount or extent, if any, of any such adjustment, a Claim may be made therefor as provided in Paragraph 10.05.

6.10 *Taxes*

A. Contractor shall pay all sales, consumer, use, and other similar taxes required to be paid by Contractor in accordance with the Laws and Regulations of the place of the Project which are applicable during the performance of the Work.

6.11 *Use of Site and Other Areas*

A. *Limitation on Use of Site and Other Areas:*

1. Contractor shall confine construction equipment, the storage of materials and equipment, and the operations of workers to the Site and other areas permitted by Laws and Regulations, and shall not unreasonably encumber the Site and other areas with construction equipment or other materials or equipment. Contractor shall assume full responsibility for any damage to any such land or area, or to the owner or occupant thereof, or of any adjacent land or areas resulting from the performance of the Work.

2. Should any claim be made by any such owner or occupant because of the performance of the Work, Contractor shall promptly settle with such other party by negotiation or otherwise resolve the claim by arbitration or other dispute resolution proceeding or at law.

3. To the fullest extent permitted by Laws and Regulations, Contractor shall indemnify and hold harmless Owner and Engineer, and the officers, directors, members, partners, employees, agents, consultants and subcontractors of each and any of them from and against all claims, costs, losses, and damages (including but not limited to all fees and charges of engineers, architects, attorneys, and other professionals and all court or arbitration or other dispute resolution costs) arising out of or relating to any claim or action, legal or equitable, brought

Copyright © 2007 National Society of Professional Engineers for EJCDC. All rights reserved.

by any such owner or occupant against Owner, Engineer, or any other party indemnified hereunder to the extent caused by or based upon Contractor's performance of the Work.

B. *Removal of Debris During Performance of the Work:* During the progress of the Work Contractor shall keep the Site and other areas free from accumulations of waste materials, rubbish, and other debris. Removal and disposal of such waste materials, rubbish, and other debris shall conform to applicable Laws and Regulations.

C. *Cleaning:* Prior to Substantial Completion of the Work Contractor shall clean the Site and the Work and make it ready for utilization by Owner. At the completion of the Work Contractor shall remove from the Site all tools, appliances, construction equipment and machinery, and surplus materials and shall restore to original condition all property not designated for alteration by the Contract Documents.

D. *Loading Structures:* Contractor shall not load nor permit any part of any structure to be loaded in any manner that will endanger the structure, nor shall Contractor subject any part of the Work or adjacent property to stresses or pressures that will endanger it.

6.12 *Record Documents*

A. Contractor shall maintain in a safe place at the Site one record copy of all Drawings, Specifications, Addenda, Change Orders, Work Change Directives, Field Orders, and written interpretations and clarifications in good order and annotated to show changes made during construction. These record documents together with all approved Samples and a counterpart of all approved Shop Drawings will be available to Engineer for reference. Upon completion of the Work, these record documents, Samples, and Shop Drawings will be delivered to Engineer for Owner.

6.13 *Safety and Protection*

A. Contractor shall be solely responsible for initiating, maintaining and supervising all safety precautions and programs in connection with the Work. Such responsibility does not relieve Subcontractors of their responsibility for the safety of persons or property in the performance of their work, nor for compliance with applicable safety Laws and Regulations. Contractor shall take all necessary precautions for the safety of, and shall provide the necessary protection to prevent damage, injury or loss to:

1. all persons on the Site or who may be affected by the Work;

2. all the Work and materials and equipment to be incorporated therein, whether in storage on or off the Site; and

3. other property at the Site or adjacent thereto, including trees, shrubs, lawns, walks, pavements, roadways, structures, utilities, and Underground Facilities not designated for removal, relocation, or replacement in the course of construction.

B. Contractor shall comply with all applicable Laws and Regulations relating to the safety of persons or property, or to the protection of persons or property from damage, injury, or loss; and

Copyright © 2007 National Society of Professional Engineers for EJCDC. All rights reserved.

shall erect and maintain all necessary safeguards for such safety and protection. Contractor shall notify owners of adjacent property and of Underground Facilities and other utility owners when prosecution of the Work may affect them, and shall cooperate with them in the protection, removal, relocation, and replacement of their property.

C. Contractor shall comply with the applicable requirements of Owner's safety programs, if any. The Supplementary Conditions identify any Owner's safety programs that are applicable to the Work.

D. Contractor shall inform Owner and Engineer of the specific requirements of Contractor's safety program with which Owner's and Engineer's employees and representatives must comply while at the Site.

E. All damage, injury, or loss to any property referred to in Paragraph 6.13.A.2 or 6.13.A.3 caused, directly or indirectly, in whole or in part, by Contractor, any Subcontractor, Supplier, or any other individual or entity directly or indirectly employed by any of them to perform any of the Work, or anyone for whose acts any of them may be liable, shall be remedied by Contractor (except damage or loss attributable to the fault of Drawings or Specifications or to the acts or omissions of Owner or Engineer or anyone employed by any of them, or anyone for whose acts any of them may be liable, and not attributable, directly or indirectly, in whole or in part, to the fault or negligence of Contractor or any Subcontractor, Supplier, or other individual or entity directly or indirectly employed by any of them).

F. Contractor's duties and responsibilities for safety and for protection of the Work shall continue until such time as all the Work is completed and Engineer has issued a notice to Owner and Contractor in accordance with Paragraph 14.07.B that the Work is acceptable (except as otherwise expressly provided in connection with Substantial Completion).

6.14 *Safety Representative*

A. Contractor shall designate a qualified and experienced safety representative at the Site whose duties and responsibilities shall be the prevention of accidents and the maintaining and supervising of safety precautions and programs.

6.15 *Hazard Communication Programs*

A. Contractor shall be responsible for coordinating any exchange of material safety data sheets or other hazard communication information required to be made available to or exchanged between or among employers at the Site in accordance with Laws or Regulations.

6.16 *Emergencies*

A. In emergencies affecting the safety or protection of persons or the Work or property at the Site or adjacent thereto, Contractor is obligated to act to prevent threatened damage, injury, or loss. Contractor shall give Engineer prompt written notice if Contractor believes that any significant changes in the Work or variations from the Contract Documents have been caused thereby or are required as a result thereof. If Engineer determines that a change in the Contract Documents is

Copyright © 2007 National Society of Professional Engineers for EJCDC. All rights reserved.

required because of the action taken by Contractor in response to such an emergency, a Work Change Directive or Change Order will be issued.

6.17 *Shop Drawings and Samples*

A. Contractor shall submit Shop Drawings and Samples to Engineer for review and approval in accordance with the accepted Schedule of Submittals (as required by Paragraph 2.07). Each submittal will be identified as Engineer may require.

1. *Shop Drawings:*

a. Submit number of copies specified in the General Requirements.

b. Data shown on the Shop Drawings will be complete with respect to quantities, dimensions, specified performance and design criteria, materials, and similar data to show Engineer the services, materials, and equipment Contractor proposes to provide and to enable Engineer to review the information for the limited purposes required by Paragraph 6.17.D.

2. *Samples:*

a. Submit number of Samples specified in the Specifications.

b. Clearly identify each Sample as to material, Supplier, pertinent data such as catalog numbers, the use for which intended and other data as Engineer may require to enable Engineer to review the submittal for the limited purposes required by Paragraph 6.17.D.

B. Where a Shop Drawing or Sample is required by the Contract Documents or the Schedule of Submittals, any related Work performed prior to Engineer's review and approval of the pertinent submittal will be at the sole expense and responsibility of Contractor.

C. *Submittal Procedures:*

1. Before submitting each Shop Drawing or Sample, Contractor shall have:

a. reviewed and coordinated each Shop Drawing or Sample with other Shop Drawings and Samples and with the requirements of the Work and the Contract Documents;

b. determined and verified all field measurements, quantities, dimensions, specified performance and design criteria, installation requirements, materials, catalog numbers, and similar information with respect thereto;

c. determined and verified the suitability of all materials offered with respect to the indicated application, fabrication, shipping, handling, storage, assembly, and installation pertaining to the performance of the Work; and

d. determined and verified all information relative to Contractor's responsibilities for means, methods, techniques, sequences, and procedures of construction, and safety precautions and programs incident thereto.

Copyright © 2007 National Society of Professional Engineers for EJCDC. All rights reserved.

2. Each submittal shall bear a stamp or specific written certification that Contractor has satisfied Contractor's obligations under the Contract Documents with respect to Contractor's review and approval of that submittal.

3. With each submittal, Contractor shall give Engineer specific written notice of any variations that the Shop Drawing or Sample may have from the requirements of the Contract Documents. This notice shall be both a written communication separate from the Shop Drawings or Sample submittal; and, in addition, by a specific notation made on each Shop Drawing or Sample submitted to Engineer for review and approval of each such variation.

D. *Engineer's Review:*

1. Engineer will provide timely review of Shop Drawings and Samples in accordance with the Schedule of Submittals acceptable to Engineer. Engineer's review and approval will be only to determine if the items covered by the submittals will, after installation or incorporation in the Work, conform to the information given in the Contract Documents and be compatible with the design concept of the completed Project as a functioning whole as indicated by the Contract Documents.

2. Engineer's review and approval will not extend to means, methods, techniques, sequences, or procedures of construction (except where a particular means, method, technique, sequence, or procedure of construction is specifically and expressly called for by the Contract Documents) or to safety precautions or programs incident thereto. The review and approval of a separate item as such will not indicate approval of the assembly in which the item functions.

3. Engineer's review and approval shall not relieve Contractor from responsibility for any variation from the requirements of the Contract Documents unless Contractor has complied with the requirements of Paragraph 6.17.C.3 and Engineer has given written approval of each such variation by specific written notation thereof incorporated in or accompanying the Shop Drawing or Sample. Engineer's review and approval shall not relieve Contractor from responsibility for complying with the requirements of Paragraph 6.17.C.1.

E. *Resubmittal Procedures:*

1. Contractor shall make corrections required by Engineer and shall return the required number of corrected copies of Shop Drawings and submit, as required, new Samples for review and approval. Contractor shall direct specific attention in writing to revisions other than the corrections called for by Engineer on previous submittals.

6.18 *Continuing the Work*

A. Contractor shall carry on the Work and adhere to the Progress Schedule during all disputes or disagreements with Owner. No Work shall be delayed or postponed pending resolution of any disputes or disagreements, except as permitted by Paragraph 15.04 or as Owner and Contractor may otherwise agree in writing.

Copyright © 2007 National Society of Professional Engineers for EJCDC. All rights reserved.

6.19 *Contractor's General Warranty and Guarantee*

A. Contractor warrants and guarantees to Owner that all Work will be in accordance with the Contract Documents and will not be defective. Engineer and its officers, directors, members, partners, employees, agents, consultants, and subcontractors shall be entitled to rely on representation of Contractor's warranty and guarantee.

B. Contractor's warranty and guarantee hereunder excludes defects or damage caused by:

1. abuse, modification, or improper maintenance or operation by persons other than Contractor, Subcontractors, Suppliers, or any other individual or entity for whom Contractor is responsible; or

2. normal wear and tear under normal usage.

C. Contractor's obligation to perform and complete the Work in accordance with the Contract Documents shall be absolute. None of the following will constitute an acceptance of Work that is not in accordance with the Contract Documents or a release of Contractor's obligation to perform the Work in accordance with the Contract Documents:

1. observations by Engineer;

2. recommendation by Engineer or payment by Owner of any progress or final payment;

3. the issuance of a certificate of Substantial Completion by Engineer or any payment related thereto by Owner;

4. use or occupancy of the Work or any part thereof by Owner;

5. any review and approval of a Shop Drawing or Sample submittal or the issuance of a notice of acceptability by Engineer;

6. any inspection, test, or approval by others; or

7. any correction of defective Work by Owner.

6.20 *Indemnification*

A. To the fullest extent permitted by Laws and Regulations, Contractor shall indemnify and hold harmless Owner and Engineer, and the officers, directors, members, partners, employees, agents, consultants and subcontractors of each and any of them from and against all claims, costs, losses, and damages (including but not limited to all fees and charges of engineers, architects, attorneys, and other professionals and all court or arbitration or other dispute resolution costs) arising out of or relating to the performance of the Work, provided that any such claim, cost, loss, or damage is attributable to bodily injury, sickness, disease, or death, or to injury to or destruction of tangible property (other than the Work itself), including the loss of use resulting therefrom but only to the extent caused by any negligent act or omission of Contractor, any Subcontractor, any Supplier, or any individual or entity directly or indirectly employed by any of them to perform any of the Work or anyone for whose acts any of them may be liable .

Copyright © 2007 National Society of Professional Engineers for EJCDC. All rights reserved.

B. In any and all claims against Owner or Engineer or any of their officers, directors, members, partners, employees, agents, consultants, or subcontractors by any employee (or the survivor or personal representative of such employee) of Contractor, any Subcontractor, any Supplier, or any individual or entity directly or indirectly employed by any of them to perform any of the Work, or anyone for whose acts any of them may be liable, the indemnification obligation under Paragraph 6.20.A shall not be limited in any way by any limitation on the amount or type of damages, compensation, or benefits payable by or for Contractor or any such Subcontractor, Supplier, or other individual or entity under workers' compensation acts, disability benefit acts, or other employee benefit acts.

C. The indemnification obligations of Contractor under Paragraph 6.20.A shall not extend to the liability of Engineer and Engineer's officers, directors, members, partners, employees, agents, consultants and subcontractors arising out of:

1. the preparation or approval of, or the failure to prepare or approve maps, Drawings, opinions, reports, surveys, Change Orders, designs, or Specifications; or

2. giving directions or instructions, or failing to give them, if that is the primary cause of the injury or damage.

6.21 *Delegation of Professional Design Services*

A. Contractor will not be required to provide professional design services unless such services are specifically required by the Contract Documents for a portion of the Work or unless such services are required to carry out Contractor's responsibilities for construction means, methods, techniques, sequences and procedures. Contractor shall not be required to provide professional services in violation of applicable law.

B. If professional design services or certifications by a design professional related to systems, materials or equipment are specifically required of Contractor by the Contract Documents, Owner and Engineer will specify all performance and design criteria that such services must satisfy. Contractor shall cause such services or certifications to be provided by a properly licensed professional, whose signature and seal shall appear on all drawings, calculations, specifications, certifications, Shop Drawings and other submittals prepared by such professional. Shop Drawings and other submittals related to the Work designed or certified by such professional, if prepared by others, shall bear such professional's written approval when submitted to Engineer.

C. Owner and Engineer shall be entitled to rely upon the adequacy, accuracy and completeness of the services, certifications or approvals performed by such design professionals, provided Owner and Engineer have specified to Contractor all performance and design criteria that such services must satisfy.

D. Pursuant to this Paragraph 6.21, Engineer's review and approval of design calculations and design drawings will be only for the limited purpose of checking for conformance with performance and design criteria given and the design concept expressed in the Contract Documents. Engineer's review and approval of Shop Drawings and other submittals (except design calculations and design drawings) will be only for the purpose stated in Paragraph 6.17.D.1.

Copyright © 2007 National Society of Professional Engineers for EJCDC. All rights reserved.

E. Contractor shall not be responsible for the adequacy of the performance or design criteria required by the Contract Documents.

ARTICLE 7 – OTHER WORK AT THE SITE

7.01 *Related Work at Site*

A. Owner may perform other work related to the Project at the Site with Owner's employees, or through other direct contracts therefor, or have other work performed by utility owners. If such other work is not noted in the Contract Documents, then:

1. written notice thereof will be given to Contractor prior to starting any such other work; and

2. if Owner and Contractor are unable to agree on entitlement to or on the amount or extent, if any, of any adjustment in the Contract Price or Contract Times that should be allowed as a result of such other work, a Claim may be made therefor as provided in Paragraph 10.05.

B. Contractor shall afford each other contractor who is a party to such a direct contract, each utility owner, and Owner, if Owner is performing other work with Owner's employees, proper and safe access to the Site, provide a reasonable opportunity for the introduction and storage of materials and equipment and the execution of such other work, and properly coordinate the Work with theirs. Contractor shall do all cutting, fitting, and patching of the Work that may be required to properly connect or otherwise make its several parts come together and properly integrate with such other work. Contractor shall not endanger any work of others by cutting, excavating, or otherwise altering such work; provided, however, that Contractor may cut or alter others' work with the written consent of Engineer and the others whose work will be affected. The duties and responsibilities of Contractor under this Paragraph are for the benefit of such utility owners and other contractors to the extent that there are comparable provisions for the benefit of Contractor in said direct contracts between Owner and such utility owners and other contractors.

C. If the proper execution or results of any part of Contractor's Work depends upon work performed by others under this Article 7, Contractor shall inspect such other work and promptly report to Engineer in writing any delays, defects, or deficiencies in such other work that render it unavailable or unsuitable for the proper execution and results of Contractor's Work. Contractor's failure to so report will constitute an acceptance of such other work as fit and proper for integration with Contractor's Work except for latent defects and deficiencies in such other work.

7.02 *Coordination*

A. If Owner intends to contract with others for the performance of other work on the Project at the Site, the following will be set forth in Supplementary Conditions:

1. the individual or entity who will have authority and responsibility for coordination of the activities among the various contractors will be identified;

2. the specific matters to be covered by such authority and responsibility will be itemized; and

3. the extent of such authority and responsibilities will be provided.

Copyright © 2007 National Society of Professional Engineers for EJCDC. All rights reserved.

B. Unless otherwise provided in the Supplementary Conditions, Owner shall have sole authority and responsibility for such coordination.

7.03 *Legal Relationships*

A. Paragraphs 7.01.A and 7.02 are not applicable for utilities not under the control of Owner.

B. Each other direct contract of Owner under Paragraph 7.01.A shall provide that the other contractor is liable to Owner and Contractor for the reasonable direct delay and disruption costs incurred by Contractor as a result of the other contractor's wrongful actions or inactions.

C. Contractor shall be liable to Owner and any other contractor under direct contract to Owner for the reasonable direct delay and disruption costs incurred by such other contractor as a result of Contractor's wrongful action or inactions.

ARTICLE 8 – OWNER'S RESPONSIBILITIES

8.01 *Communications to Contractor*

A. Except as otherwise provided in these General Conditions, Owner shall issue all communications to Contractor through Engineer.

8.02 *Replacement of Engineer*

A. In case of termination of the employment of Engineer, Owner shall appoint an engineer to whom Contractor makes no reasonable objection, whose status under the Contract Documents shall be that of the former Engineer.

8.03 *Furnish Data*

A. Owner shall promptly furnish the data required of Owner under the Contract Documents.

8.04 *Pay When Due*

A. Owner shall make payments to Contractor when they are due as provided in Paragraphs 14.02.C and 14.07.C.

8.05 *Lands and Easements; Reports and Tests*

A. Owner's duties with respect to providing lands and easements and providing engineering surveys to establish reference points are set forth in Paragraphs 4.01 and 4.05. Paragraph 4.02 refers to Owner's identifying and making available to Contractor copies of reports of explorations and tests of subsurface conditions and drawings of physical conditions relating to existing surface or subsurface structures at the Site.

8.06 *Insurance*

A. Owner's responsibilities, if any, with respect to purchasing and maintaining liability and property insurance are set forth in Article 5.

Copyright © 2007 National Society of Professional Engineers for EJCDC. All rights reserved.

8.07 *Change Orders*

A. Owner is obligated to execute Change Orders as indicated in Paragraph 10.03.

8.08 *Inspections, Tests, and Approvals*

A. Owner's responsibility with respect to certain inspections, tests, and approvals is set forth in Paragraph 13.03.B.

8.09 *Limitations on Owner's Responsibilities*

A. The Owner shall not supervise, direct, or have control or authority over, nor be responsible for, Contractor's means, methods, techniques, sequences, or procedures of construction, or the safety precautions and programs incident thereto, or for any failure of Contractor to comply with Laws and Regulations applicable to the performance of the Work. Owner will not be responsible for Contractor's failure to perform the Work in accordance with the Contract Documents.

8.10 *Undisclosed Hazardous Environmental Condition*

A. Owner's responsibility in respect to an undisclosed Hazardous Environmental Condition is set forth in Paragraph 4.06.

8.11 *Evidence of Financial Arrangements*

A. Upon request of Contractor, Owner shall furnish Contractor reasonable evidence that financial arrangements have been made to satisfy Owner's obligations under the Contract Documents.

8.12 *Compliance with Safety Program*

A. While at the Site, Owner's employees and representatives shall comply with the specific applicable requirements of Contractor's safety programs of which Owner has been informed pursuant to Paragraph 6.13.D.

ARTICLE 9 – ENGINEER'S STATUS DURING CONSTRUCTION

9.01 *Owner's Representative*

A. Engineer will be Owner's representative during the construction period. The duties and responsibilities and the limitations of authority of Engineer as Owner's representative during construction are set forth in the Contract Documents.

9.02 *Visits to Site*

A. Engineer will make visits to the Site at intervals appropriate to the various stages of construction as Engineer deems necessary in order to observe as an experienced and qualified design professional the progress that has been made and the quality of the various aspects of Contractor's executed Work. Based on information obtained during such visits and observations, Engineer, for the benefit of Owner, will determine, in general, if the Work is proceeding in accordance with the Contract Documents. Engineer will not be required to make exhaustive or

Copyright © 2007 National Society of Professional Engineers for EJCDC. All rights reserved.

continuous inspections on the Site to check the quality or quantity of the Work. Engineer's efforts will be directed toward providing for Owner a greater degree of confidence that the completed Work will conform generally to the Contract Documents. On the basis of such visits and observations, Engineer will keep Owner informed of the progress of the Work and will endeavor to guard Owner against defective Work.

B. Engineer's visits and observations are subject to all the limitations on Engineer's authority and responsibility set forth in Paragraph 9.09. Particularly, but without limitation, during or as a result of Engineer's visits or observations of Contractor's Work, Engineer will not supervise, direct, control, or have authority over or be responsible for Contractor's means, methods, techniques, sequences, or procedures of construction, or the safety precautions and programs incident thereto, or for any failure of Contractor to comply with Laws and Regulations applicable to the performance of the Work.

9.03 *Project Representative*

A. If Owner and Engineer agree, Engineer will furnish a Resident Project Representative to assist Engineer in providing more extensive observation of the Work. The authority and responsibilities of any such Resident Project Representative and assistants will be as provided in the Supplementary Conditions, and limitations on the responsibilities thereof will be as provided in Paragraph 9.09. If Owner designates another representative or agent to represent Owner at the Site who is not Engineer's consultant, agent or employee, the responsibilities and authority and limitations thereon of such other individual or entity will be as provided in the Supplementary Conditions.

9.04 *Authorized Variations in Work*

A. Engineer may authorize minor variations in the Work from the requirements of the Contract Documents which do not involve an adjustment in the Contract Price or the Contract Times and are compatible with the design concept of the completed Project as a functioning whole as indicated by the Contract Documents. These may be accomplished by a Field Order and will be binding on Owner and also on Contractor, who shall perform the Work involved promptly. If Owner or Contractor believes that a Field Order justifies an adjustment in the Contract Price or Contract Times, or both, and the parties are unable to agree on entitlement to or on the amount or extent, if any, of any such adjustment, a Claim may be made therefor as provided in Paragraph 10.05.

9.05 *Rejecting Defective Work*

A. Engineer will have authority to reject Work which Engineer believes to be defective, or that Engineer believes will not produce a completed Project that conforms to the Contract Documents or that will prejudice the integrity of the design concept of the completed Project as a functioning whole as indicated by the Contract Documents. Engineer will also have authority to require special inspection or testing of the Work as provided in Paragraph 13.04, whether or not the Work is fabricated, installed, or completed.

Copyright © 2007 National Society of Professional Engineers for EJCDC. All rights reserved.

9.06 *Shop Drawings, Change Orders and Payments*

A. In connection with Engineer's authority, and limitations thereof, as to Shop Drawings and Samples, see Paragraph 6.17.

B. In connection with Engineer's authority, and limitations thereof, as to design calculations and design drawings submitted in response to a delegation of professional design services, if any, see Paragraph 6.21.

C. In connection with Engineer's authority as to Change Orders, see Articles 10, 11, and 12.

D. In connection with Engineer's authority as to Applications for Payment, see Article 14.

9.07 *Determinations for Unit Price Work*

A. Engineer will determine the actual quantities and classifications of Unit Price Work performed by Contractor. Engineer will review with Contractor the Engineer's preliminary determinations on such matters before rendering a written decision thereon (by recommendation of an Application for Payment or otherwise). Engineer's written decision thereon will be final and binding (except as modified by Engineer to reflect changed factual conditions or more accurate data) upon Owner and Contractor, subject to the provisions of Paragraph 10.05.

9.08 *Decisions on Requirements of Contract Documents and Acceptability of Work*

A. Engineer will be the initial interpreter of the requirements of the Contract Documents and judge of the acceptability of the Work thereunder. All matters in question and other matters between Owner and Contractor arising prior to the date final payment is due relating to the acceptability of the Work, and the interpretation of the requirements of the Contract Documents pertaining to the performance of the Work, will be referred initially to Engineer in writing within 30 days of the event giving rise to the question.

B. Engineer will, with reasonable promptness, render a written decision on the issue referred. If Owner or Contractor believes that any such decision entitles them to an adjustment in the Contract Price or Contract Times or both, a Claim may be made under Paragraph 10.05. The date of Engineer's decision shall be the date of the event giving rise to the issues referenced for the purposes of Paragraph 10.05.B.

C. Engineer's written decision on the issue referred will be final and binding on Owner and Contractor, subject to the provisions of Paragraph 10.05.

D. When functioning as interpreter and judge under this Paragraph 9.08, Engineer will not show partiality to Owner or Contractor and will not be liable in connection with any interpretation or decision rendered in good faith in such capacity.

9.09 *Limitations on Engineer's Authority and Responsibilities*

A. Neither Engineer's authority or responsibility under this Article 9 or under any other provision of the Contract Documents nor any decision made by Engineer in good faith either to exercise or not

Copyright © 2007 National Society of Professional Engineers for EJCDC. All rights reserved.

exercise such authority or responsibility or the undertaking, exercise, or performance of any authority or responsibility by Engineer shall create, impose, or give rise to any duty in contract, tort, or otherwise owed by Engineer to Contractor, any Subcontractor, any Supplier, any other individual or entity, or to any surety for or employee or agent of any of them.

B. Engineer will not supervise, direct, control, or have authority over or be responsible for Contractor's means, methods, techniques, sequences, or procedures of construction, or the safety precautions and programs incident thereto, or for any failure of Contractor to comply with Laws and Regulations applicable to the performance of the Work. Engineer will not be responsible for Contractor's failure to perform the Work in accordance with the Contract Documents.

C. Engineer will not be responsible for the acts or omissions of Contractor or of any Subcontractor, any Supplier, or of any other individual or entity performing any of the Work.

D. Engineer's review of the final Application for Payment and accompanying documentation and all maintenance and operating instructions, schedules, guarantees, bonds, certificates of inspection, tests and approvals, and other documentation required to be delivered by Paragraph 14.07.A will only be to determine generally that their content complies with the requirements of, and in the case of certificates of inspections, tests, and approvals that the results certified indicate compliance with, the Contract Documents.

E. The limitations upon authority and responsibility set forth in this Paragraph 9.09 shall also apply to the Resident Project Representative, if any, and assistants, if any.

9.10 *Compliance with Safety Program*

A. While at the Site, Engineer's employees and representatives shall comply with the specific applicable requirements of Contractor's safety programs of which Engineer has been informed pursuant to Paragraph 6.13.D.

ARTICLE 10 – CHANGES IN THE WORK; CLAIMS

10.01 *Authorized Changes in the Work*

A. Without invalidating the Contract and without notice to any surety, Owner may, at any time or from time to time, order additions, deletions, or revisions in the Work by a Change Order, or a Work Change Directive. Upon receipt of any such document, Contractor shall promptly proceed with the Work involved which will be performed under the applicable conditions of the Contract Documents (except as otherwise specifically provided).

B. If Owner and Contractor are unable to agree on entitlement to, or on the amount or extent, if any, of an adjustment in the Contract Price or Contract Times, or both, that should be allowed as a result of a Work Change Directive, a Claim may be made therefor as provided in Paragraph 10.05.

Copyright © 2007 National Society of Professional Engineers for EJCDC. All rights reserved.

10.02 *Unauthorized Changes in the Work*

A. Contractor shall not be entitled to an increase in the Contract Price or an extension of the Contract Times with respect to any work performed that is not required by the Contract Documents as amended, modified, or supplemented as provided in Paragraph 3.04, except in the case of an emergency as provided in Paragraph 6.16 or in the case of uncovering Work as provided in Paragraph 13.04.D.

10.03 *Execution of Change Orders*

A. Owner and Contractor shall execute appropriate Change Orders recommended by Engineer covering:

1. changes in the Work which are: (i) ordered by Owner pursuant to Paragraph 10.01.A, (ii) required because of acceptance of defective Work under Paragraph 13.08.A or Owner's correction of defective Work under Paragraph 13.09, or (iii) agreed to by the parties;

2. changes in the Contract Price or Contract Times which are agreed to by the parties, including any undisputed sum or amount of time for Work actually performed in accordance with a Work Change Directive; and

3. changes in the Contract Price or Contract Times which embody the substance of any written decision rendered by Engineer pursuant to Paragraph 10.05; provided that, in lieu of executing any such Change Order, an appeal may be taken from any such decision in accordance with the provisions of the Contract Documents and applicable Laws and Regulations, but during any such appeal, Contractor shall carry on the Work and adhere to the Progress Schedule as provided in Paragraph 6.18.A.

10.04 *Notification to Surety*

A. If the provisions of any bond require notice to be given to a surety of any change affecting the general scope of the Work or the provisions of the Contract Documents (including, but not limited to, Contract Price or Contract Times), the giving of any such notice will be Contractor's responsibility. The amount of each applicable bond will be adjusted to reflect the effect of any such change.

10.05 *Claims*

A. *Engineer's Decision Required*: All Claims, except those waived pursuant to Paragraph 14.09, shall be referred to the Engineer for decision. A decision by Engineer shall be required as a condition precedent to any exercise by Owner or Contractor of any rights or remedies either may otherwise have under the Contract Documents or by Laws and Regulations in respect of such Claims.

B. *Notice:* Written notice stating the general nature of each Claim shall be delivered by the claimant to Engineer and the other party to the Contract promptly (but in no event later than 30 days) after the start of the event giving rise thereto. The responsibility to substantiate a Claim shall rest with the party making the Claim. Notice of the amount or extent of the Claim, with supporting data

Copyright © 2007 National Society of Professional Engineers for EJCDC. All rights reserved.

shall be delivered to the Engineer and the other party to the Contract within 60 days after the start of such event (unless Engineer allows additional time for claimant to submit additional or more accurate data in support of such Claim). A Claim for an adjustment in Contract Price shall be prepared in accordance with the provisions of Paragraph 12.01.B. A Claim for an adjustment in Contract Times shall be prepared in accordance with the provisions of Paragraph 12.02.B. Each Claim shall be accompanied by claimant's written statement that the adjustment claimed is the entire adjustment to which the claimant believes it is entitled as a result of said event. The opposing party shall submit any response to Engineer and the claimant within 30 days after receipt of the claimant's last submittal (unless Engineer allows additional time).

C. *Engineer's Action*: Engineer will review each Claim and, within 30 days after receipt of the last submittal of the claimant or the last submittal of the opposing party, if any, take one of the following actions in writing:

1. deny the Claim in whole or in part;

2. approve the Claim; or

3. notify the parties that the Engineer is unable to resolve the Claim if, in the Engineer's sole discretion, it would be inappropriate for the Engineer to do so. For purposes of further resolution of the Claim, such notice shall be deemed a denial.

D. In the event that Engineer does not take action on a Claim within said 30 days, the Claim shall be deemed denied.

E. Engineer's written action under Paragraph 10.05.C or denial pursuant to Paragraphs 10.05.C.3 or 10.05.D will be final and binding upon Owner and Contractor, unless Owner or Contractor invoke the dispute resolution procedure set forth in Article 16 within 30 days of such action or denial.

F. No Claim for an adjustment in Contract Price or Contract Times will be valid if not submitted in accordance with this Paragraph 10.05.

ARTICLE 11 – COST OF THE WORK; ALLOWANCES; UNIT PRICE WORK

11.01 *Cost of the Work*

A. *Costs Included:* The term Cost of the Work means the sum of all costs, except those excluded in Paragraph 11.01.B, necessarily incurred and paid by Contractor in the proper performance of the Work. When the value of any Work covered by a Change Order or when a Claim for an adjustment in Contract Price is determined on the basis of Cost of the Work, the costs to be reimbursed to Contractor will be only those additional or incremental costs required because of the change in the Work or because of the event giving rise to the Claim. Except as otherwise may be agreed to in writing by Owner, such costs shall be in amounts no higher than those prevailing in the locality of the Project, shall not include any of the costs itemized in Paragraph 11.01.B, and shall include only the following items:

Copyright © 2007 National Society of Professional Engineers for EJCDC. All rights reserved.

1. Payroll costs for employees in the direct employ of Contractor in the performance of the Work under schedules of job classifications agreed upon by Owner and Contractor. Such employees shall include, without limitation, superintendents, foremen, and other personnel employed full time on the Work. Payroll costs for employees not employed full time on the Work shall be apportioned on the basis of their time spent on the Work. Payroll costs shall include, but not be limited to, salaries and wages plus the cost of fringe benefits, which shall include social security contributions, unemployment, excise, and payroll taxes, workers' compensation, health and retirement benefits, bonuses, sick leave, vacation and holiday pay applicable thereto. The expenses of performing Work outside of regular working hours, on Saturday, Sunday, or legal holidays, shall be included in the above to the extent authorized by Owner.

2. Cost of all materials and equipment furnished and incorporated in the Work, including costs of transportation and storage thereof, and Suppliers' field services required in connection therewith. All cash discounts shall accrue to Contractor unless Owner deposits funds with Contractor with which to make payments, in which case the cash discounts shall accrue to Owner. All trade discounts, rebates and refunds and returns from sale of surplus materials and equipment shall accrue to Owner, and Contractor shall make provisions so that they may be obtained.

3. Payments made by Contractor to Subcontractors for Work performed by Subcontractors. If required by Owner, Contractor shall obtain competitive bids from subcontractors acceptable to Owner and Contractor and shall deliver such bids to Owner, who will then determine, with the advice of Engineer, which bids, if any, will be acceptable. If any subcontract provides that the Subcontractor is to be paid on the basis of Cost of the Work plus a fee, the Subcontractor's Cost of the Work and fee shall be determined in the same manner as Contractor's Cost of the Work and fee as provided in this Paragraph 11.01.

4. Costs of special consultants (including but not limited to engineers, architects, testing laboratories, surveyors, attorneys, and accountants) employed for services specifically related to the Work.

5. Supplemental costs including the following:

    a. The proportion of necessary transportation, travel, and subsistence expenses of Contractor's employees incurred in discharge of duties connected with the Work.

    b. Cost, including transportation and maintenance, of all materials, supplies, equipment, machinery, appliances, office, and temporary facilities at the Site, and hand tools not owned by the workers, which are consumed in the performance of the Work, and cost, less market value, of such items used but not consumed which remain the property of Contractor.

    c. Rentals of all construction equipment and machinery, and the parts thereof whether rented from Contractor or others in accordance with rental agreements approved by Owner with the advice of Engineer, and the costs of transportation, loading, unloading, assembly, dismantling, and removal thereof. All such costs shall be in accordance with the terms of

Copyright © 2007 National Society of Professional Engineers for EJCDC. All rights reserved.

said rental agreements. The rental of any such equipment, machinery, or parts shall cease when the use thereof is no longer necessary for the Work.

d. Sales, consumer, use, and other similar taxes related to the Work, and for which Contractor is liable, as imposed by Laws and Regulations.

e. Deposits lost for causes other than negligence of Contractor, any Subcontractor, or anyone directly or indirectly employed by any of them or for whose acts any of them may be liable, and royalty payments and fees for permits and licenses.

f. Losses and damages (and related expenses) caused by damage to the Work, not compensated by insurance or otherwise, sustained by Contractor in connection with the performance of the Work (except losses and damages within the deductible amounts of property insurance established in accordance with Paragraph 5.06.D), provided such losses and damages have resulted from causes other than the negligence of Contractor, any Subcontractor, or anyone directly or indirectly employed by any of them or for whose acts any of them may be liable. Such losses shall include settlements made with the written consent and approval of Owner. No such losses, damages, and expenses shall be included in the Cost of the Work for the purpose of determining Contractor's fee.

g. The cost of utilities, fuel, and sanitary facilities at the Site.

h. Minor expenses such as telegrams, long distance telephone calls, telephone service at the Site, express and courier services, and similar petty cash items in connection with the Work.

i. The costs of premiums for all bonds and insurance Contractor is required by the Contract Documents to purchase and maintain.

B. *Costs Excluded:* The term Cost of the Work shall not include any of the following items:

1. Payroll costs and other compensation of Contractor's officers, executives, principals (of partnerships and sole proprietorships), general managers, safety managers, engineers, architects, estimators, attorneys, auditors, accountants, purchasing and contracting agents, expediters, timekeepers, clerks, and other personnel employed by Contractor, whether at the Site or in Contractor's principal or branch office for general administration of the Work and not specifically included in the agreed upon schedule of job classifications referred to in Paragraph 11.01.A.1 or specifically covered by Paragraph 11.01.A.4, all of which are to be considered administrative costs covered by the Contractor's fee.

2. Expenses of Contractor's principal and branch offices other than Contractor's office at the Site.

3. Any part of Contractor's capital expenses, including interest on Contractor's capital employed for the Work and charges against Contractor for delinquent payments.

4. Costs due to the negligence of Contractor, any Subcontractor, or anyone directly or indirectly employed by any of them or for whose acts any of them may be liable, including but not

Copyright © 2007 National Society of Professional Engineers for EJCDC. All rights reserved.

limited to, the correction of defective Work, disposal of materials or equipment wrongly supplied, and making good any damage to property.

5. Other overhead or general expense costs of any kind and the costs of any item not specifically and expressly included in Paragraphs 11.01.A.

C. *Contractor's Fee:* When all the Work is performed on the basis of cost-plus, Contractor's fee shall be determined as set forth in the Agreement. When the value of any Work covered by a Change Order or when a Claim for an adjustment in Contract Price is determined on the basis of Cost of the Work, Contractor's fee shall be determined as set forth in Paragraph 12.01.C.

D. *Documentation:* Whenever the Cost of the Work for any purpose is to be determined pursuant to Paragraphs 11.01.A and 11.01.B, Contractor will establish and maintain records thereof in accordance with generally accepted accounting practices and submit in a form acceptable to Engineer an itemized cost breakdown together with supporting data.

11.02 *Allowances*

A. It is understood that Contractor has included in the Contract Price all allowances so named in the Contract Documents and shall cause the Work so covered to be performed for such sums and by such persons or entities as may be acceptable to Owner and Engineer.

B. *Cash Allowances:*

1. Contractor agrees that:

a. the cash allowances include the cost to Contractor (less any applicable trade discounts) of materials and equipment required by the allowances to be delivered at the Site, and all applicable taxes; and

b. Contractor's costs for unloading and handling on the Site, labor, installation, overhead, profit, and other expenses contemplated for the cash allowances have been included in the Contract Price and not in the allowances, and no demand for additional payment on account of any of the foregoing will be valid.

C. *Contingency Allowance:*

1. Contractor agrees that a contingency allowance, if any, is for the sole use of Owner to cover unanticipated costs.

D. Prior to final payment, an appropriate Change Order will be issued as recommended by Engineer to reflect actual amounts due Contractor on account of Work covered by allowances, and the Contract Price shall be correspondingly adjusted.

11.03 *Unit Price Work*

A. Where the Contract Documents provide that all or part of the Work is to be Unit Price Work, initially the Contract Price will be deemed to include for all Unit Price Work an amount equal to

Copyright © 2007 National Society of Professional Engineers for EJCDC. All rights reserved.

the sum of the unit price for each separately identified item of Unit Price Work times the estimated quantity of each item as indicated in the Agreement.

B. The estimated quantities of items of Unit Price Work are not guaranteed and are solely for the purpose of comparison of Bids and determining an initial Contract Price. Determinations of the actual quantities and classifications of Unit Price Work performed by Contractor will be made by Engineer subject to the provisions of Paragraph 9.07.

C. Each unit price will be deemed to include an amount considered by Contractor to be adequate to cover Contractor's overhead and profit for each separately identified item.

D. Owner or Contractor may make a Claim for an adjustment in the Contract Price in accordance with Paragraph 10.05 if:

1. the quantity of any item of Unit Price Work performed by Contractor differs materially and significantly from the estimated quantity of such item indicated in the Agreement; and

2. there is no corresponding adjustment with respect to any other item of Work; and

3. Contractor believes that Contractor is entitled to an increase in Contract Price as a result of having incurred additional expense or Owner believes that Owner is entitled to a decrease in Contract Price and the parties are unable to agree as to the amount of any such increase or decrease.

ARTICLE 12 – CHANGE OF CONTRACT PRICE; CHANGE OF CONTRACT TIMES

12.01 *Change of Contract Price*

A. The Contract Price may only be changed by a Change Order. Any Claim for an adjustment in the Contract Price shall be based on written notice submitted by the party making the Claim to the Engineer and the other party to the Contract in accordance with the provisions of Paragraph 10.05.

B. The value of any Work covered by a Change Order or of any Claim for an adjustment in the Contract Price will be determined as follows:

1. where the Work involved is covered by unit prices contained in the Contract Documents, by application of such unit prices to the quantities of the items involved (subject to the provisions of Paragraph 11.03); or

2. where the Work involved is not covered by unit prices contained in the Contract Documents, by a mutually agreed lump sum (which may include an allowance for overhead and profit not necessarily in accordance with Paragraph 12.01.C.2); or

3. where the Work involved is not covered by unit prices contained in the Contract Documents and agreement to a lump sum is not reached under Paragraph 12.01.B.2, on the basis of the Cost of the Work (determined as provided in Paragraph 11.01) plus a Contractor's fee for overhead and profit (determined as provided in Paragraph 12.01.C).

Copyright © 2007 National Society of Professional Engineers for EJCDC. All rights reserved.

C. *Contractor's Fee:* The Contractor's fee for overhead and profit shall be determined as follows:

1. a mutually acceptable fixed fee; or

2. if a fixed fee is not agreed upon, then a fee based on the following percentages of the various portions of the Cost of the Work:

   a. for costs incurred under Paragraphs 11.01.A.1 and 11.01.A.2, the Contractor's fee shall be 15 percent;

   b. for costs incurred under Paragraph 11.01.A.3, the Contractor's fee shall be five percent;

   c. where one or more tiers of subcontracts are on the basis of Cost of the Work plus a fee and no fixed fee is agreed upon, the intent of Paragraphs 12.01.C.2.a and 12.01.C.2.b is that the Subcontractor who actually performs the Work, at whatever tier, will be paid a fee of 15 percent of the costs incurred by such Subcontractor under Paragraphs 11.01.A.1 and 11.01.A.2 and that any higher tier Subcontractor and Contractor will each be paid a fee of five percent of the amount paid to the next lower tier Subcontractor;

   d. no fee shall be payable on the basis of costs itemized under Paragraphs 11.01.A.4, 11.01.A.5, and 11.01.B;

   e. the amount of credit to be allowed by Contractor to Owner for any change which results in a net decrease in cost will be the amount of the actual net decrease in cost plus a deduction in Contractor's fee by an amount equal to five percent of such net decrease; and

   f. when both additions and credits are involved in any one change, the adjustment in Contractor's fee shall be computed on the basis of the net change in accordance with Paragraphs 12.01.C.2.a through 12.01.C.2.e, inclusive.

12.02 *Change of Contract Times*

A. The Contract Times may only be changed by a Change Order. Any Claim for an adjustment in the Contract Times shall be based on written notice submitted by the party making the Claim to the Engineer and the other party to the Contract in accordance with the provisions of Paragraph 10.05.

B. Any adjustment of the Contract Times covered by a Change Order or any Claim for an adjustment in the Contract Times will be determined in accordance with the provisions of this Article 12.

12.03 *Delays*

A. Where Contractor is prevented from completing any part of the Work within the Contract Times due to delay beyond the control of Contractor, the Contract Times will be extended in an amount equal to the time lost due to such delay if a Claim is made therefor as provided in Paragraph 12.02.A. Delays beyond the control of Contractor shall include, but not be limited to, acts or

Copyright © 2007 National Society of Professional Engineers for EJCDC. All rights reserved.

neglect by Owner, acts or neglect of utility owners or other contractors performing other work as contemplated by Article 7, fires, floods, epidemics, abnormal weather conditions, or acts of God.

B. If Owner, Engineer, or other contractors or utility owners performing other work for Owner as contemplated by Article 7, or anyone for whom Owner is responsible, delays, disrupts, or interferes with the performance or progress of the Work, then Contractor shall be entitled to an equitable adjustment in the Contract Price or the Contract Times, or both. Contractor's entitlement to an adjustment of the Contract Times is conditioned on such adjustment being essential to Contractor's ability to complete the Work within the Contract Times.

C. If Contractor is delayed in the performance or progress of the Work by fire, flood, epidemic, abnormal weather conditions, acts of God, acts or failures to act of utility owners not under the control of Owner, or other causes not the fault of and beyond control of Owner and Contractor, then Contractor shall be entitled to an equitable adjustment in Contract Times, if such adjustment is essential to Contractor's ability to complete the Work within the Contract Times. Such an adjustment shall be Contractor's sole and exclusive remedy for the delays described in this Paragraph 12.03.C.

D. Owner, Engineer, and their officers, directors, members, partners, employees, agents, consultants, or subcontractors shall not be liable to Contractor for any claims, costs, losses, or damages (including but not limited to all fees and charges of engineers, architects, attorneys, and other professionals and all court or arbitration or other dispute resolution costs) sustained by Contractor on or in connection with any other project or anticipated project.

E. Contractor shall not be entitled to an adjustment in Contract Price or Contract Times for delays within the control of Contractor. Delays attributable to and within the control of a Subcontractor or Supplier shall be deemed to be delays within the control of Contractor.

ARTICLE 13 – TESTS AND INSPECTIONS; CORRECTION, REMOVAL OR ACCEPTANCE OF DEFECTIVE WORK

13.01 *Notice of Defects*

A. Prompt notice of all defective Work of which Owner or Engineer has actual knowledge will be given to Contractor. Defective Work may be rejected, corrected, or accepted as provided in this Article 13.

13.02 *Access to Work*

A. Owner, Engineer, their consultants and other representatives and personnel of Owner, independent testing laboratories, and governmental agencies with jurisdictional interests will have access to the Site and the Work at reasonable times for their observation, inspection, and testing. Contractor shall provide them proper and safe conditions for such access and advise them of Contractor's safety procedures and programs so that they may comply therewith as applicable.

Copyright © 2007 National Society of Professional Engineers for EJCDC. All rights reserved.

13.03 *Tests and Inspections*

A. Contractor shall give Engineer timely notice of readiness of the Work for all required inspections, tests, or approvals and shall cooperate with inspection and testing personnel to facilitate required inspections or tests.

B. Owner shall employ and pay for the services of an independent testing laboratory to perform all inspections, tests, or approvals required by the Contract Documents except:

1. for inspections, tests, or approvals covered by Paragraphs 13.03.C and 13.03.D below;

2. that costs incurred in connection with tests or inspections conducted pursuant to Paragraph 13.04.B shall be paid as provided in Paragraph 13.04.C; and

3. as otherwise specifically provided in the Contract Documents.

C. If Laws or Regulations of any public body having jurisdiction require any Work (or part thereof) specifically to be inspected, tested, or approved by an employee or other representative of such public body, Contractor shall assume full responsibility for arranging and obtaining such inspections, tests, or approvals, pay all costs in connection therewith, and furnish Engineer the required certificates of inspection or approval.

D. Contractor shall be responsible for arranging and obtaining and shall pay all costs in connection with any inspections, tests, or approvals required for Owner's and Engineer's acceptance of materials or equipment to be incorporated in the Work; or acceptance of materials, mix designs, or equipment submitted for approval prior to Contractor's purchase thereof for incorporation in the Work. Such inspections, tests, or approvals shall be performed by organizations acceptable to Owner and Engineer.

E. If any Work (or the work of others) that is to be inspected, tested, or approved is covered by Contractor without written concurrence of Engineer, Contractor shall, if requested by Engineer, uncover such Work for observation.

F. Uncovering Work as provided in Paragraph 13.03.E shall be at Contractor's expense unless Contractor has given Engineer timely notice of Contractor's intention to cover the same and Engineer has not acted with reasonable promptness in response to such notice.

13.04 *Uncovering Work*

A. If any Work is covered contrary to the written request of Engineer, it must, if requested by Engineer, be uncovered for Engineer's observation and replaced at Contractor's expense.

B. If Engineer considers it necessary or advisable that covered Work be observed by Engineer or inspected or tested by others, Contractor, at Engineer's request, shall uncover, expose, or otherwise make available for observation, inspection, or testing as Engineer may require, that portion of the Work in question, furnishing all necessary labor, material, and equipment.

Copyright © 2007 National Society of Professional Engineers for EJCDC. All rights reserved.

C. If it is found that the uncovered Work is defective, Contractor shall pay all claims, costs, losses, and damages (including but not limited to all fees and charges of engineers, architects, attorneys, and other professionals and all court or arbitration or other dispute resolution costs) arising out of or relating to such uncovering, exposure, observation, inspection, and testing, and of satisfactory replacement or reconstruction (including but not limited to all costs of repair or replacement of work of others); and Owner shall be entitled to an appropriate decrease in the Contract Price. If the parties are unable to agree as to the amount thereof, Owner may make a Claim therefor as provided in Paragraph 10.05.

D. If the uncovered Work is not found to be defective, Contractor shall be allowed an increase in the Contract Price or an extension of the Contract Times, or both, directly attributable to such uncovering, exposure, observation, inspection, testing, replacement, and reconstruction. If the parties are unable to agree as to the amount or extent thereof, Contractor may make a Claim therefor as provided in Paragraph 10.05.

13.05 *Owner May Stop the Work*

A. If the Work is defective, or Contractor fails to supply sufficient skilled workers or suitable materials or equipment, or fails to perform the Work in such a way that the completed Work will conform to the Contract Documents, Owner may order Contractor to stop the Work, or any portion thereof, until the cause for such order has been eliminated; however, this right of Owner to stop the Work shall not give rise to any duty on the part of Owner to exercise this right for the benefit of Contractor, any Subcontractor, any Supplier, any other individual or entity, or any surety for, or employee or agent of any of them.

13.06 *Correction or Removal of Defective Work*

A. Promptly after receipt of written notice, Contractor shall correct all defective Work, whether or not fabricated, installed, or completed, or, if the Work has been rejected by Engineer, remove it from the Project and replace it with Work that is not defective. Contractor shall pay all claims, costs, losses, and damages (including but not limited to all fees and charges of engineers, architects, attorneys, and other professionals and all court or arbitration or other dispute resolution costs) arising out of or relating to such correction or removal (including but not limited to all costs of repair or replacement of work of others).

B. When correcting defective Work under the terms of this Paragraph 13.06 or Paragraph 13.07, Contractor shall take no action that would void or otherwise impair Owner's special warranty and guarantee, if any, on said Work.

13.07 *Correction Period*

A. If within one year after the date of Substantial Completion (or such longer period of time as may be prescribed by the terms of any applicable special guarantee required by the Contract Documents) or by any specific provision of the Contract Documents, any Work is found to be defective, or if the repair of any damages to the land or areas made available for Contractor's use by Owner or permitted by Laws and Regulations as contemplated in Paragraph 6.11.A is found to be defective, Contractor shall promptly, without cost to Owner and in accordance with Owner's written instructions:

Copyright © 2007 National Society of Professional Engineers for EJCDC. All rights reserved.

1. repair such defective land or areas; or

2. correct such defective Work; or

3. if the defective Work has been rejected by Owner, remove it from the Project and replace it with Work that is not defective, and

4. satisfactorily correct or repair or remove and replace any damage to other Work, to the work of others or other land or areas resulting therefrom.

B. If Contractor does not promptly comply with the terms of Owner's written instructions, or in an emergency where delay would cause serious risk of loss or damage, Owner may have the defective Work corrected or repaired or may have the rejected Work removed and replaced. All claims, costs, losses, and damages (including but not limited to all fees and charges of engineers, architects, attorneys, and other professionals and all court or arbitration or other dispute resolution costs) arising out of or relating to such correction or repair or such removal and replacement (including but not limited to all costs of repair or replacement of work of others) will be paid by Contractor.

C. In special circumstances where a particular item of equipment is placed in continuous service before Substantial Completion of all the Work, the correction period for that item may start to run from an earlier date if so provided in the Specifications.

D. Where defective Work (and damage to other Work resulting therefrom) has been corrected or removed and replaced under this Paragraph 13.07, the correction period hereunder with respect to such Work will be extended for an additional period of one year after such correction or removal and replacement has been satisfactorily completed.

E. Contractor's obligations under this Paragraph 13.07 are in addition to any other obligation or warranty. The provisions of this Paragraph 13.07 shall not be construed as a substitute for, or a waiver of, the provisions of any applicable statute of limitation or repose.

13.08 *Acceptance of Defective Work*

A. If, instead of requiring correction or removal and replacement of defective Work, Owner (and, prior to Engineer's recommendation of final payment, Engineer) prefers to accept it, Owner may do so. Contractor shall pay all claims, costs, losses, and damages (including but not limited to all fees and charges of engineers, architects, attorneys, and other professionals and all court or arbitration or other dispute resolution costs) attributable to Owner's evaluation of and determination to accept such defective Work (such costs to be approved by Engineer as to reasonableness) and for the diminished value of the Work to the extent not otherwise paid by Contractor pursuant to this sentence. If any such acceptance occurs prior to Engineer's recommendation of final payment, a Change Order will be issued incorporating the necessary revisions in the Contract Documents with respect to the Work, and Owner shall be entitled to an appropriate decrease in the Contract Price, reflecting the diminished value of Work so accepted. If the parties are unable to agree as to the amount thereof, Owner may make a Claim therefor as provided in Paragraph 10.05. If the acceptance occurs after such recommendation, an appropriate amount will be paid by Contractor to Owner.

Copyright © 2007 National Society of Professional Engineers for EJCDC. All rights reserved.

13.09 *Owner May Correct Defective Work*

A. If Contractor fails within a reasonable time after written notice from Engineer to correct defective Work, or to remove and replace rejected Work as required by Engineer in accordance with Paragraph 13.06.A, or if Contractor fails to perform the Work in accordance with the Contract Documents, or if Contractor fails to comply with any other provision of the Contract Documents, Owner may, after seven days written notice to Contractor, correct, or remedy any such deficiency.

B. In exercising the rights and remedies under this Paragraph 13.09, Owner shall proceed expeditiously. In connection with such corrective or remedial action, Owner may exclude Contractor from all or part of the Site, take possession of all or part of the Work and suspend Contractor's services related thereto, take possession of Contractor's tools, appliances, construction equipment and machinery at the Site, and incorporate in the Work all materials and equipment stored at the Site or for which Owner has paid Contractor but which are stored elsewhere. Contractor shall allow Owner, Owner's representatives, agents and employees, Owner's other contractors, and Engineer and Engineer's consultants access to the Site to enable Owner to exercise the rights and remedies under this Paragraph.

C. All claims, costs, losses, and damages (including but not limited to all fees and charges of engineers, architects, attorneys, and other professionals and all court or arbitration or other dispute resolution costs) incurred or sustained by Owner in exercising the rights and remedies under this Paragraph 13.09 will be charged against Contractor, and a Change Order will be issued incorporating the necessary revisions in the Contract Documents with respect to the Work; and Owner shall be entitled to an appropriate decrease in the Contract Price. If the parties are unable to agree as to the amount of the adjustment, Owner may make a Claim therefor as provided in Paragraph 10.05. Such claims, costs, losses and damages will include but not be limited to all costs of repair, or replacement of work of others destroyed or damaged by correction, removal, or replacement of Contractor's defective Work.

D. Contractor shall not be allowed an extension of the Contract Times because of any delay in the performance of the Work attributable to the exercise by Owner of Owner's rights and remedies under this Paragraph 13.09.

ARTICLE 14 – PAYMENTS TO CONTRACTOR AND COMPLETION

14.01 *Schedule of Values*

A. The Schedule of Values established as provided in Paragraph 2.07.A will serve as the basis for progress payments and will be incorporated into a form of Application for Payment acceptable to Engineer. Progress payments on account of Unit Price Work will be based on the number of units completed.

14.02 *Progress Payments*

A. *Applications for Payments:*

1. At least 20 days before the date established in the Agreement for each progress payment (but not more often than once a month), Contractor shall submit to Engineer for review an

Copyright © 2007 National Society of Professional Engineers for EJCDC. All rights reserved.

Application for Payment filled out and signed by Contractor covering the Work completed as of the date of the Application and accompanied by such supporting documentation as is required by the Contract Documents. If payment is requested on the basis of materials and equipment not incorporated in the Work but delivered and suitably stored at the Site or at another location agreed to in writing, the Application for Payment shall also be accompanied by a bill of sale, invoice, or other documentation warranting that Owner has received the materials and equipment free and clear of all Liens and evidence that the materials and equipment are covered by appropriate property insurance or other arrangements to protect Owner's interest therein, all of which must be satisfactory to Owner.

2. Beginning with the second Application for Payment, each Application shall include an affidavit of Contractor stating that all previous progress payments received on account of the Work have been applied on account to discharge Contractor's legitimate obligations associated with prior Applications for Payment.

3. The amount of retainage with respect to progress payments will be as stipulated in the Agreement.

B. *Review of Applications:*

1. Engineer will, within 10 days after receipt of each Application for Payment, either indicate in writing a recommendation of payment and present the Application to Owner or return the Application to Contractor indicating in writing Engineer's reasons for refusing to recommend payment. In the latter case, Contractor may make the necessary corrections and resubmit the Application.

2. Engineer's recommendation of any payment requested in an Application for Payment will constitute a representation by Engineer to Owner, based on Engineer's observations of the executed Work as an experienced and qualified design professional, and on Engineer's review of the Application for Payment and the accompanying data and schedules, that to the best of Engineer's knowledge, information and belief:

   a. the Work has progressed to the point indicated;

   b. the quality of the Work is generally in accordance with the Contract Documents (subject to an evaluation of the Work as a functioning whole prior to or upon Substantial Completion, the results of any subsequent tests called for in the Contract Documents, a final determination of quantities and classifications for Unit Price Work under Paragraph 9.07, and any other qualifications stated in the recommendation); and

   c. the conditions precedent to Contractor's being entitled to such payment appear to have been fulfilled in so far as it is Engineer's responsibility to observe the Work.

3. By recommending any such payment Engineer will not thereby be deemed to have represented that:

   a. inspections made to check the quality or the quantity of the Work as it has been performed have been exhaustive, extended to every aspect of the Work in progress, or

Copyright © 2007 National Society of Professional Engineers for EJCDC. All rights reserved.

involved detailed inspections of the Work beyond the responsibilities specifically assigned to Engineer in the Contract Documents; or

b. there may not be other matters or issues between the parties that might entitle Contractor to be paid additionally by Owner or entitle Owner to withhold payment to Contractor.

4. Neither Engineer's review of Contractor's Work for the purposes of recommending payments nor Engineer's recommendation of any payment, including final payment, will impose responsibility on Engineer:

   a. to supervise, direct, or control the Work, or

   b. for the means, methods, techniques, sequences, or procedures of construction, or the safety precautions and programs incident thereto, or

   c. for Contractor's failure to comply with Laws and Regulations applicable to Contractor's performance of the Work, or

   d. to make any examination to ascertain how or for what purposes Contractor has used the moneys paid on account of the Contract Price, or

   e. to determine that title to any of the Work, materials, or equipment has passed to Owner free and clear of any Liens.

5. Engineer may refuse to recommend the whole or any part of any payment if, in Engineer's opinion, it would be incorrect to make the representations to Owner stated in Paragraph 14.02.B.2. Engineer may also refuse to recommend any such payment or, because of subsequently discovered evidence or the results of subsequent inspections or tests, revise or revoke any such payment recommendation previously made, to such extent as may be necessary in Engineer's opinion to protect Owner from loss because:

   a. the Work is defective, or completed Work has been damaged, requiring correction or replacement;

   b. the Contract Price has been reduced by Change Orders;

   c. Owner has been required to correct defective Work or complete Work in accordance with Paragraph 13.09; or

   d. Engineer has actual knowledge of the occurrence of any of the events enumerated in Paragraph 15.02.A.

C. *Payment Becomes Due:*

1. Ten days after presentation of the Application for Payment to Owner with Engineer's recommendation, the amount recommended will (subject to the provisions of Paragraph 14.02.D) become due, and when due will be paid by Owner to Contractor.

Copyright © 2007 National Society of Professional Engineers for EJCDC. All rights reserved.

D. *Reduction in Payment:*

1. Owner may refuse to make payment of the full amount recommended by Engineer because:

   a. claims have been made against Owner on account of Contractor's performance or furnishing of the Work;

   b. Liens have been filed in connection with the Work, except where Contractor has delivered a specific bond satisfactory to Owner to secure the satisfaction and discharge of such Liens;

   c. there are other items entitling Owner to a set-off against the amount recommended; or

   d. Owner has actual knowledge of the occurrence of any of the events enumerated in Paragraphs 14.02.B.5.a through 14.02.B.5.c or Paragraph 15.02.A.

2. If Owner refuses to make payment of the full amount recommended by Engineer, Owner will give Contractor immediate written notice (with a copy to Engineer) stating the reasons for such action and promptly pay Contractor any amount remaining after deduction of the amount so withheld. Owner shall promptly pay Contractor the amount so withheld, or any adjustment thereto agreed to by Owner and Contractor, when Contractor remedies the reasons for such action.

3. Upon a subsequent determination that Owner's refusal of payment was not justified, the amount wrongfully withheld shall be treated as an amount due as determined by Paragraph 14.02.C.1 and subject to interest as provided in the Agreement.

14.03 *Contractor's Warranty of Title*

A. Contractor warrants and guarantees that title to all Work, materials, and equipment covered by any Application for Payment, whether incorporated in the Project or not, will pass to Owner no later than the time of payment free and clear of all Liens.

14.04 *Substantial Completion*

A. When Contractor considers the entire Work ready for its intended use Contractor shall notify Owner and Engineer in writing that the entire Work is substantially complete (except for items specifically listed by Contractor as incomplete) and request that Engineer issue a certificate of Substantial Completion.

B. Promptly after Contractor's notification, Owner, Contractor, and Engineer shall make an inspection of the Work to determine the status of completion. If Engineer does not consider the Work substantially complete, Engineer will notify Contractor in writing giving the reasons therefor.

C. If Engineer considers the Work substantially complete, Engineer will deliver to Owner a tentative certificate of Substantial Completion which shall fix the date of Substantial Completion. There shall be attached to the certificate a tentative list of items to be completed or corrected before

Copyright © 2007 National Society of Professional Engineers for EJCDC. All rights reserved.

final payment. Owner shall have seven days after receipt of the tentative certificate during which to make written objection to Engineer as to any provisions of the certificate or attached list. If, after considering such objections, Engineer concludes that the Work is not substantially complete, Engineer will, within 14 days after submission of the tentative certificate to Owner, notify Contractor in writing, stating the reasons therefor. If, after consideration of Owner's objections, Engineer considers the Work substantially complete, Engineer will, within said 14 days, execute and deliver to Owner and Contractor a definitive certificate of Substantial Completion (with a revised tentative list of items to be completed or corrected) reflecting such changes from the tentative certificate as Engineer believes justified after consideration of any objections from Owner.

D. At the time of delivery of the tentative certificate of Substantial Completion, Engineer will deliver to Owner and Contractor a written recommendation as to division of responsibilities pending final payment between Owner and Contractor with respect to security, operation, safety, and protection of the Work, maintenance, heat, utilities, insurance, and warranties and guarantees. Unless Owner and Contractor agree otherwise in writing and so inform Engineer in writing prior to Engineer's issuing the definitive certificate of Substantial Completion, Engineer's aforesaid recommendation will be binding on Owner and Contractor until final payment.

E. Owner shall have the right to exclude Contractor from the Site after the date of Substantial Completion subject to allowing Contractor reasonable access to remove its property and complete or correct items on the tentative list.

14.05 *Partial Utilization*

A. Prior to Substantial Completion of all the Work, Owner may use or occupy any substantially completed part of the Work which has specifically been identified in the Contract Documents, or which Owner, Engineer, and Contractor agree constitutes a separately functioning and usable part of the Work that can be used by Owner for its intended purpose without significant interference with Contractor's performance of the remainder of the Work, subject to the following conditions:

1. Owner at any time may request Contractor in writing to permit Owner to use or occupy any such part of the Work which Owner believes to be ready for its intended use and substantially complete. If and when Contractor agrees that such part of the Work is substantially complete, Contractor, Owner, and Engineer will follow the procedures of Paragraph 14.04.A through D for that part of the Work.

2. Contractor at any time may notify Owner and Engineer in writing that Contractor considers any such part of the Work ready for its intended use and substantially complete and request Engineer to issue a certificate of Substantial Completion for that part of the Work.

3. Within a reasonable time after either such request, Owner, Contractor, and Engineer shall make an inspection of that part of the Work to determine its status of completion. If Engineer does not consider that part of the Work to be substantially complete, Engineer will notify Owner and Contractor in writing giving the reasons therefor. If Engineer considers that part of the Work to be substantially complete, the provisions of Paragraph 14.04 will apply with respect to certification of Substantial Completion of that part of the Work and the division of responsibility in respect thereof and access thereto.

Copyright © 2007 National Society of Professional Engineers for EJCDC. All rights reserved.

4. No use or occupancy or separate operation of part of the Work may occur prior to compliance with the requirements of Paragraph 5.10 regarding property insurance.

14.06 *Final Inspection*

A. Upon written notice from Contractor that the entire Work or an agreed portion thereof is complete, Engineer will promptly make a final inspection with Owner and Contractor and will notify Contractor in writing of all particulars in which this inspection reveals that the Work is incomplete or defective. Contractor shall immediately take such measures as are necessary to complete such Work or remedy such deficiencies.

14.07 *Final Payment*

A. *Application for Payment:*

1. After Contractor has, in the opinion of Engineer, satisfactorily completed all corrections identified during the final inspection and has delivered, in accordance with the Contract Documents, all maintenance and operating instructions, schedules, guarantees, bonds, certificates or other evidence of insurance, certificates of inspection, marked-up record documents (as provided in Paragraph 6.12), and other documents, Contractor may make application for final payment following the procedure for progress payments.

2. The final Application for Payment shall be accompanied (except as previously delivered) by:

   a. all documentation called for in the Contract Documents, including but not limited to the evidence of insurance required by Paragraph 5.04.B.6;

   b. consent of the surety, if any, to final payment;

   c. a list of all Claims against Owner that Contractor believes are unsettled; and

   d. complete and legally effective releases or waivers (satisfactory to Owner) of all Lien rights arising out of or Liens filed in connection with the Work.

3. In lieu of the releases or waivers of Liens specified in Paragraph 14.07.A.2 and as approved by Owner, Contractor may furnish receipts or releases in full and an affidavit of Contractor that: (i) the releases and receipts include all labor, services, material, and equipment for which a Lien could be filed; and (ii) all payrolls, material and equipment bills, and other indebtedness connected with the Work for which Owner might in any way be responsible, or which might in any way result in liens or other burdens on Owner's property, have been paid or otherwise satisfied. If any Subcontractor or Supplier fails to furnish such a release or receipt in full, Contractor may furnish a bond or other collateral satisfactory to Owner to indemnify Owner against any Lien.

B. *Engineer's Review of Application and Acceptance:*

1. If, on the basis of Engineer's observation of the Work during construction and final inspection, and Engineer's review of the final Application for Payment and accompanying

Copyright © 2007 National Society of Professional Engineers for EJCDC. All rights reserved.

documentation as required by the Contract Documents, Engineer is satisfied that the Work has been completed and Contractor's other obligations under the Contract Documents have been fulfilled, Engineer will, within ten days after receipt of the final Application for Payment, indicate in writing Engineer's recommendation of payment and present the Application for Payment to Owner for payment. At the same time Engineer will also give written notice to Owner and Contractor that the Work is acceptable subject to the provisions of Paragraph 14.09. Otherwise, Engineer will return the Application for Payment to Contractor, indicating in writing the reasons for refusing to recommend final payment, in which case Contractor shall make the necessary corrections and resubmit the Application for Payment.

C. *Payment Becomes Due:*

1. Thirty days after the presentation to Owner of the Application for Payment and accompanying documentation, the amount recommended by Engineer, less any sum Owner is entitled to set off against Engineer's recommendation, including but not limited to liquidated damages, will become due and will be paid by Owner to Contractor.

14.08 *Final Completion Delayed*

A. If, through no fault of Contractor, final completion of the Work is significantly delayed, and if Engineer so confirms, Owner shall, upon receipt of Contractor's final Application for Payment (for Work fully completed and accepted) and recommendation of Engineer, and without terminating the Contract, make payment of the balance due for that portion of the Work fully completed and accepted. If the remaining balance to be held by Owner for Work not fully completed or corrected is less than the retainage stipulated in the Agreement, and if bonds have been furnished as required in Paragraph 5.01, the written consent of the surety to the payment of the balance due for that portion of the Work fully completed and accepted shall be submitted by Contractor to Engineer with the Application for such payment. Such payment shall be made under the terms and conditions governing final payment, except that it shall not constitute a waiver of Claims.

14.09 *Waiver of Claims*

A. The making and acceptance of final payment will constitute:

1. a waiver of all Claims by Owner against Contractor, except Claims arising from unsettled Liens, from defective Work appearing after final inspection pursuant to Paragraph 14.06, from failure to comply with the Contract Documents or the terms of any special guarantees specified therein, or from Contractor's continuing obligations under the Contract Documents; and

2. a waiver of all Claims by Contractor against Owner other than those previously made in accordance with the requirements herein and expressly acknowledged by Owner in writing as still unsettled.

Copyright © 2007 National Society of Professional Engineers for EJCDC. All rights reserved.

ARTICLE 15 – SUSPENSION OF WORK AND TERMINATION

15.01 *Owner May Suspend Work*

A. At any time and without cause, Owner may suspend the Work or any portion thereof for a period of not more than 90 consecutive days by notice in writing to Contractor and Engineer which will fix the date on which Work will be resumed. Contractor shall resume the Work on the date so fixed. Contractor shall be granted an adjustment in the Contract Price or an extension of the Contract Times, or both, directly attributable to any such suspension if Contractor makes a Claim therefor as provided in Paragraph 10.05.

15.02 *Owner May Terminate for Cause*

A. The occurrence of any one or more of the following events will justify termination for cause:

1. Contractor's persistent failure to perform the Work in accordance with the Contract Documents (including, but not limited to, failure to supply sufficient skilled workers or suitable materials or equipment or failure to adhere to the Progress Schedule established under Paragraph 2.07 as adjusted from time to time pursuant to Paragraph 6.04);

2. Contractor's disregard of Laws or Regulations of any public body having jurisdiction;

3. Contractor's repeated disregard of the authority of Engineer; or

4. Contractor's violation in any substantial way of any provisions of the Contract Documents.

B. If one or more of the events identified in Paragraph 15.02.A occur, Owner may, after giving Contractor (and surety) seven days written notice of its intent to terminate the services of Contractor:

1. exclude Contractor from the Site, and take possession of the Work and of all Contractor's tools, appliances, construction equipment, and machinery at the Site, and use the same to the full extent they could be used by Contractor (without liability to Contractor for trespass or conversion);

2. incorporate in the Work all materials and equipment stored at the Site or for which Owner has paid Contractor but which are stored elsewhere; and

3. complete the Work as Owner may deem expedient.

C. If Owner proceeds as provided in Paragraph 15.02.B, Contractor shall not be entitled to receive any further payment until the Work is completed. If the unpaid balance of the Contract Price exceeds all claims, costs, losses, and damages (including but not limited to all fees and charges of engineers, architects, attorneys, and other professionals and all court or arbitration or other dispute resolution costs) sustained by Owner arising out of or relating to completing the Work, such excess will be paid to Contractor. If such claims, costs, losses, and damages exceed such unpaid balance, Contractor shall pay the difference to Owner. Such claims, costs, losses, and damages incurred by Owner will be reviewed by Engineer as to their reasonableness and, when

Copyright © 2007 National Society of Professional Engineers for EJCDC. All rights reserved.

so approved by Engineer, incorporated in a Change Order. When exercising any rights or remedies under this Paragraph, Owner shall not be required to obtain the lowest price for the Work performed.

D. Notwithstanding Paragraphs 15.02.B and 15.02.C, Contractor's services will not be terminated if Contractor begins within seven days of receipt of notice of intent to terminate to correct its failure to perform and proceeds diligently to cure such failure within no more than 30 days of receipt of said notice.

E. Where Contractor's services have been so terminated by Owner, the termination will not affect any rights or remedies of Owner against Contractor then existing or which may thereafter accrue. Any retention or payment of moneys due Contractor by Owner will not release Contractor from liability.

F. If and to the extent that Contractor has provided a performance bond under the provisions of Paragraph 5.01.A, the termination procedures of that bond shall supersede the provisions of Paragraphs 15.02.B and 15.02.C.

15.03 *Owner May Terminate For Convenience*

A. Upon seven days written notice to Contractor and Engineer, Owner may, without cause and without prejudice to any other right or remedy of Owner, terminate the Contract. In such case, Contractor shall be paid for (without duplication of any items):

1. completed and acceptable Work executed in accordance with the Contract Documents prior to the effective date of termination, including fair and reasonable sums for overhead and profit on such Work;

2. expenses sustained prior to the effective date of termination in performing services and furnishing labor, materials, or equipment as required by the Contract Documents in connection with uncompleted Work, plus fair and reasonable sums for overhead and profit on such expenses;

3. all claims, costs, losses, and damages (including but not limited to all fees and charges of engineers, architects, attorneys, and other professionals and all court or arbitration or other dispute resolution costs) incurred in settlement of terminated contracts with Subcontractors, Suppliers, and others; and

4. reasonable expenses directly attributable to termination.

B. Contractor shall not be paid on account of loss of anticipated profits or revenue or other economic loss arising out of or resulting from such termination.

15.04 *Contractor May Stop Work or Terminate*

A. If, through no act or fault of Contractor, (i) the Work is suspended for more than 90 consecutive days by Owner or under an order of court or other public authority, or (ii) Engineer fails to act on any Application for Payment within 30 days after it is submitted, or (iii) Owner fails for 30 days

Copyright © 2007 National Society of Professional Engineers for EJCDC. All rights reserved.

to pay Contractor any sum finally determined to be due, then Contractor may, upon seven days written notice to Owner and Engineer, and provided Owner or Engineer do not remedy such suspension or failure within that time, terminate the Contract and recover from Owner payment on the same terms as provided in Paragraph 15.03.

B. In lieu of terminating the Contract and without prejudice to any other right or remedy, if Engineer has failed to act on an Application for Payment within 30 days after it is submitted, or Owner has failed for 30 days to pay Contractor any sum finally determined to be due, Contractor may, seven days after written notice to Owner and Engineer, stop the Work until payment is made of all such amounts due Contractor, including interest thereon. The provisions of this Paragraph 15.04 are not intended to preclude Contractor from making a Claim under Paragraph 10.05 for an adjustment in Contract Price or Contract Times or otherwise for expenses or damage directly attributable to Contractor's stopping the Work as permitted by this Paragraph.

ARTICLE 16 – DISPUTE RESOLUTION

16.01 *Methods and Procedures*

A. Either Owner or Contractor may request mediation of any Claim submitted to Engineer for a decision under Paragraph 10.05 before such decision becomes final and binding. The mediation will be governed by the Construction Industry Mediation Rules of the American Arbitration Association in effect as of the Effective Date of the Agreement. The request for mediation shall be submitted in writing to the American Arbitration Association and the other party to the Contract. Timely submission of the request shall stay the effect of Paragraph 10.05.E.

B. Owner and Contractor shall participate in the mediation process in good faith. The process shall be concluded within 60 days of filing of the request. The date of termination of the mediation shall be determined by application of the mediation rules referenced above.

C. If the Claim is not resolved by mediation, Engineer's action under Paragraph 10.05.C or a denial pursuant to Paragraphs 10.05.C.3 or 10.05.D shall become final and binding 30 days after termination of the mediation unless, within that time period, Owner or Contractor:

1. elects in writing to invoke any dispute resolution process provided for in the Supplementary Conditions; or

2. agrees with the other party to submit the Claim to another dispute resolution process; or

3. gives written notice to the other party of the intent to submit the Claim to a court of competent jurisdiction.

ARTICLE 17 – MISCELLANEOUS

17.01 *Giving Notice*

A. Whenever any provision of the Contract Documents requires the giving of written notice, it will be deemed to have been validly given if:

Copyright © 2007 National Society of Professional Engineers for EJCDC. All rights reserved.

1. delivered in person to the individual or to a member of the firm or to an officer of the corporation for whom it is intended; or

2. delivered at or sent by registered or certified mail, postage prepaid, to the last business address known to the giver of the notice.

17.02 *Computation of Times*

A. When any period of time is referred to in the Contract Documents by days, it will be computed to exclude the first and include the last day of such period. If the last day of any such period falls on a Saturday or Sunday or on a day made a legal holiday by the law of the applicable jurisdiction, such day will be omitted from the computation.

17.03 *Cumulative Remedies*

A. The duties and obligations imposed by these General Conditions and the rights and remedies available hereunder to the parties hereto are in addition to, and are not to be construed in any way as a limitation of, any rights and remedies available to any or all of them which are otherwise imposed or available by Laws or Regulations, by special warranty or guarantee, or by other provisions of the Contract Documents. The provisions of this Paragraph will be as effective as if repeated specifically in the Contract Documents in connection with each particular duty, obligation, right, and remedy to which they apply.

17.04 *Survival of Obligations*

A. All representations, indemnifications, warranties, and guarantees made in, required by, or given in accordance with the Contract Documents, as well as all continuing obligations indicated in the Contract Documents, will survive final payment, completion, and acceptance of the Work or termination or completion of the Contract or termination of the services of Contractor.

17.05 *Controlling Law*

A. This Contract is to be governed by the law of the state in which the Project is located.

17.06 *Headings*

A. Article and paragraph headings are inserted for convenience only and do not constitute parts of these General Conditions.

Copyright © 2007 National Society of Professional Engineers for EJCDC. All rights reserved.

Section 00800

SUPPLEMENTARY CONDITIONS

PART 1 – AMENDMENTS TO GENERAL CONDITIONS

These Supplementary Conditions amend or supplement the Standard General Conditions of the Construction Contract (Section 00700 – General Conditions) and other provisions of the Contract Documents as indicated below. All provisions which are not so amended or supplemented remain in full force and effect.

ARTICLE 2 – PRELIMINARY MATTERS

SC-2.01.B Delete Paragraph 2.01.B of the General Conditions in its entirety and insert the following in its place:

"When delivering executed contracts for the OWNER's signature, CONTRACTOR shall deliver to OWNER, with a copy to the ENGINEER, certificates and other evidence of insurance requested by OWNER which CONTRACTOR is required to purchase and maintain in accordance with Article 5."

SC-2.02 Amend the first sentence of Paragraph 2.02 of the General Conditions to read as follows:

"OWNER shall furnish to CONTRACTOR up to five printed or hard copies of the Drawings and Project Manual. Additional copies will be furnished upon request at the cost of reproduction."

ARTICLE 4 – AVAILABILITY OF LANDS; SUBSURFACE AND PHYSICAL CONDITIONS; HAZARDOUS ENVIRONMENTAL CONDITIONS; REFERENCE POINTS

SC-4.02 Add the following new paragraphs immediately after Paragraph 4.02.B:

C. In the preparation of Drawings and Specifications, ENGINEER or ENGINEER's Consultants relied upon the following reports of explorations and tests of subsurface conditions at the Site:

1. None

SC-4.06G Delete Paragraph 4.06.G of the General Conditions in its entirety.

ARTICLE 5 – BONDS AND INSURANCE

SC-5.03.B Delete Paragraph 5.03.B in its entirety.

SC-5.04 Add the following new paragraph immediately after Paragraph 5.04.B:

C. The limits of liability for the insurance required by Paragraph 5.04 of the General Conditions shall provide coverage for not less than the following amounts or greater where required by Laws and Regulations:

1. Workers' Compensation, and related coverages under Paragraphs 5.04.A.1 and A.2 of the General Conditions:

   a. State: Statutory
   b. Applicable Federal (e.g., Longshoreman's): Statutory
   c. Employer's Liability:
      $1,000,000 Each Accident
      $1,000,000 Disease – Policy Limit
      $1,000,000 Disease – Each Employee

2. Contactor's General Liability under Paragraphs 5.04.A.3 through A.6 of the General Conditions which shall include completed operations and product liability coverages and eliminate the exclusion with respect to property under the care, custody and control of Contractor:

   a. General Aggregate: $2,000,000
   b. Products – Completed Operations Aggregate: $2,000,000
   c. Personal and Advertising Injury: $1,000,000
   d. Each Occurrence (Bodily Injury and Property Damage): $1,000,000
   e. Property Damage liability insurance will provide Explosion, Collapse, and Underground coverages where applicable.
   f. Excess or Umbrella Liability
      1. General Aggregate: $2,000,000
      2. Each Occurrence: $1,000,000

3. Automobile Liability (including owned, hired, and non-owned vehicles) under Paragraph 5.04.A.6 of the General Conditions:

   a. Bodily Injury:
      Each person: $1,000,000
      Each accident: $1,000,000
   b. Property Damage:
      Each accident: $1,000,000

4. The Contractual Liability coverage required by Paragraph 5.04.B.4 of the General Conditions shall provide coverage for not less than the following amounts:

   c. Bodily Injury:
      Each accident: $1,000,000
      Annual aggregate: $2,000,000
   d. Property Damage:

Each accident: $1,000,000
Annual aggregate: $2,000,000

SC-5.06.A Delete Paragraph 5.06.A in its entirety and insert the following in its place:

A. CONTRACTOR shall purchase and maintain property insurance upon the Work at the Site in the amount of the full replacement cost thereof. This insurance shall:

1. include the interests of OWNER, CONTRACTOR, Subcontractors, ENGINEER, ENGINEER's Consultants and any other individuals or entities identified in the Supplementary Conditions, and the officers, directors, partners, employees, agents, and other consultants and subcontractors of any of them each of whom is deemed to have an insurable interest and shall be listed as an insured or additional insured;

2. be written on a Builder's Risk "all-risk" or open peril or special causes of loss policy form that shall at least include insurance for physical loss and damage to the Work, temporary buildings, falsework, and materials and equipment in transit and shall insure against at least the following perils or causes of loss: fire, lightning, extended coverage, theft, vandalism and malicious mischief, earthquake, collapse, debris removal, demolition occasioned by enforcement of Laws and Regulations, water damage, and such other perils or causes of loss as may be specifically required by the Supplementary Conditions;

3. include expenses incurred in the repair or replacement of any insured property (including but not limited to fees and charges of engineers and architects);

4. cover materials and equipment stored at the Site or at another location that was agreed to in writing by OWNER prior to being incorporated in the Work, provided that such materials and equipment have been included in an Application for Payment recommended by ENGINEER; and

5. allow for partial utilization of the Work by OWNER;

6. include testing and startup; and

7. be maintained in effect until final payment is made unless otherwise agreed to in writing by OWNER, CONTRACTOR, and ENGINEER with 30 days written notice to each other additional insured to whom a certificate of insurance has been issued.

B. CONTRACTOR shall be responsible for any deductible or self-insured retention.

C. The policies of insurance required to be purchased and maintained by CONTRACTOR in accordance with this Paragraph SC-5.06 shall comply with the requirements of Paragraph 5.06.C of the General Conditions.

SC-5.06 Delete Paragraphs 5.06.B, 5.06.D, and 5.06.E in their entirety.

SC-5.07.A Delete Paragraph 5.07.A in its entirety and insert the following in its place:

A. Owner and Contractor intend that all policies purchased in accordance with Paragraph 5.06 will protect Owner, Contractor, Subcontractors, and Engineer, and all other individuals or entities identified in the Supplementary Conditions to be listed as insureds or additional insureds (and the officers, directors, partners, employees, agents, consultants and subcontractors of each and any of them) in such policies and will provide primary coverage for all losses and damages caused by the perils or causes of loss covered thereby. All such policies shall contain provisions to the effect that in the event of payment of any loss or damage the insurers will have no rights of recovery against any of the insureds or additional insureds thereunder. To the extent that Contractor's insurance conforms to the requirements of the Contract, Owner and Contractor waive all rights against each other and their respective officers, directors, partners, employees, agents, consultants and subcontractors of each and any of them for all losses and damages caused by, arising out of or resulting from any of the perils or causes of loss covered by such policies and any other property insurance applicable to the Work; and in addition, waive all such rights against Subcontractors, and Engineer, and all other individuals or entities identified in the Supplementary Conditions to be listed as insured or additional insured (and the officers, directors, partners, employees, agents, consultants and subcontractors of each and any of them) under such policies for losses and damages so caused.

SC-5.07.B Delete Paragraph 5.07.B in its entirety.

SC-5.08 Delete Paragraphs 5.08.A and 5.08.B in their entirety.

SC-5.09 Delete Paragraph 5.09.A in its entirety and replace with the following:

A. If Owner has any objection to the coverage afforded by or other provisions of the bonds or insurance required to be purchased and maintained by Contractor in accordance with Article 5 on the basis of non-conformance with the Contract Documents, Owner shall so notify Contractor in writing. Owner and Contractor shall each provide to the other such additional information in respect of insurance provided as the other may reasonably request. Contractor shall purchase or maintain all of the bonds and insurance required by the Contract Documents. Without prejudice to any other right or remedy, the Owner may elect to obtain equivalent bonds or insurance to protect Owner's interests at the expense of the Contractor, and a Change Order shall be issued to adjust the Contract Price accordingly.

ARTICLE 6 – CONTRACTOR'S RESPONSIBILITIES

SC-6.07.B Delete Paragraph 6.07.B of the General Conditions in its entirety.

ARTICLE 11 – COST OF THE WORK; ALLOWANCES; UNIT PRICE WORK

SC-11.03.C Delete Paragraph 11.03.D in its entirety and insert the following in its place:

D. The unit price of an item of Unit Price Work shall be subject to reevaluation and adjustment under the following conditions:

1. if the total cost of a particular item of Unit Price Work amounts to 5% or more of the Contract Price and the variation in the quantity of that particular item of Unit Price Work performed by the Contractor differs by more than 25% from the estimated quantity of such item indicated in the Agreement; and

2. if there is no corresponding adjustment with respect to any other item of Work; and

3. if CONTRACTOR believes that CONTRACTOR has incurred additional expense as a result thereof; or if OWNER believes that the quantity variation entitles OWNER to an adjustment in the unit price, either OWNER or CONTRACTOR may make a claim for an adjustment in the Contract Price in accordance with Article 10 if the parties are unable to agree as to the effect of any such variations in the quantity of Unit Price Work performed.

END OF SECTION

Section 01010

SUMMARY OF WORK

PART 1 GENERAL

1.01 SCOPE OF WORK

A. This section describes the project in general and provides an overview of the extent of the work to be performed by the CONTRACTOR. Detailed requirements and extent of work is stated in the applicable Specification sections and shown on the Plans. CONTRACTOR shall, except as otherwise specifically stated herein or in any applicable part of these Contract Documents, provide and pay for all labor, materials, equipment, tools, construction equipment, and other facilities and services necessary for proper execution, testing, and completion of the work.

B. Any part or item of the work which is reasonably implied or normally required to make each installation satisfactorily operable shall be performed by the CONTRACTOR and the expense thereof shall be included in the applicable unit prices or lump sum prices bid for the work. It is the intent of these Specifications to provide the OWNER with the complete operable systems, subsystems, and other items of work. All miscellaneous appurtenances and other items of work that are incidental to meeting the intent of these Specifications shall be considered as having been included in the applicable unit prices or lump sum prices bid for the work even though these appurtenances and items may not be specifically called for in the Specifications.

1.02 DESCRIPTION OF THE PROJECT

A. The Work in this project includes the following:

Demolition of Water Plant 1 components except for water well, generator (relocated), and disinfection equipment. Water Plant 1 includes construction of a CMU fence, outdoor motor control center with awning, generator foundation, relocation of generator, yard piping, new fiberglass enclosure to house relocated chlorine gas disinfection equipment, and relocation of electrical service. See 1.03 Work Sequence for additional information.

Water Plant 2 includes construction of a 1 MG welded steel ground storage tank with ringwall foundation, CMU pump and control building, motor control center, installation of booster pumps (supplied by the City), yard piping, concrete driveway, chain link fencing with privacy slats, relocation of generator, chlorine gas disinfection equipment, and storm sewer.

Plug and abandon 12-inch well collection and 12-inch distribution lines. Construction of a 10-inch well collection line within the 18-foot water and sewer easement.

1.03 WORK SEQUENCE

A. The CONTRACTOR is required to determine his own method of construction and detailed work sequence so long as the restraints are observed and the overall project completion time is achieved (identified in the Contract Documents).

B. The City of Seabrook has entered into an agreement for the sale of the Water Plant No. 1 property. The agreement states that all Water Plant 1 items must be demolished and reconstructed by December 31, 2017.

1.04 CONSTRUCTION CRITERIA

A. The CONTRACTOR shall maintain all public streets in a condition such that vehicles and pedestrian traffic may be maintained at all times. All excavated material, construction materials, construction equipment, and construction vehicles shall be placed so as not to cause traffic hazards. If CONTRACTOR'S operations cause traffic hazards, CONTRACTOR shall repair the road surface, provide temporary ways, erect wheel guards or fences or take other measures for safety satisfactory to the ENGINEER and the OWNER.

B. The CONTRACTOR shall take all necessary precautions to prevent injury to the public in the construction area. Such precautions shall include, but not necessarily be limited to, the use of flagmen, the use of police, the erection of warning signs and/or the use of other means required by the OWNER. The CONTRACTOR shall be fully responsible for damage and injuries whether or not precautions have been provided.

C. The CONTRACTOR shall sequence all work such that at least one lane is open to traffic in all public streets at all times. Also, work shall be sequenced such that all lanes of traffic are open and vehicular access is provided to all businesses and residences on Saturdays, Sundays, and Holidays.

D. On the streets that are too narrow to maintain at least one lane of traffic during construction activities, CONTRACTOR may close a maximum of two (2) consecutive blocks for up to eight (8) hours. CONTRACTOR shall provide detours to vehicular and pedestrian traffic when necessary.

E. When detours are necessary, CONTRACTOR shall provide all necessary barriers, warning and direction signs, warning lights, flagmen, police protection, and/or any other protective devices required by the OWNER. The CONTRACTOR shall request detours from, coordinate with, and secure the required permits from the OWNER.

F. The CONTRACTOR shall be responsible for the preservation of all public and private property and shall use every precaution necessary to prevent damage thereto. If any direct or indirect damage is done to public or private property by or on account of any act, omission, neglect, or misconduct in the execution of the work on the part of the CONTRACTOR, such property shall be restored by the

CONTRACTOR, at his expense, to a condition similar or equal to that existing before the damage was done, or he shall make good the damage in other manners acceptable to the ENGINEER.

G. During the course of the work, the CONTRACTOR shall keep the site of his operations in as clean and neat a condition as is possible. He shall dispose of all residue resulting from the construction work and, at the conclusion of the work, he shall remove and haul away any surplus excavation, broken pavement, lumber, equipment, temporary structures, and any other refuse remaining from the construction operations, and shall leave the entire site of the work in a neat and orderly condition.

1.05 CONTRACTOR'S RESPONSIBILITIES

A. Execute all work. The work of this Contract is generally specified in the Construction Documents.

B. Arrange for the securing of any necessary permits and pay for the same.

C. Arrange for the necessary temporary water service and pay for this service and all water consumed during the construction work.

D. Provide adequate temporary sanitary facilities.

E. Secure all necessary building permits and furnish, install, maintain, and remove all temporary electric service facilities for construction purposes, and pay for all electrical energy consumed for construction purposes, until final acceptance by the OWNER or until the ENGINEER certifies Substantial Completion. CONTRACTOR shall be responsible for determining the total temporary electrical need and shall provide it accordingly. The temporary electrical service shall meet NEC, OSHA, and all other local safety codes.

F. Provide and pay for temporary service for lighting of temporary facilities.

G. Provide initial and replacement lamps, wiring, switches, sockets, and other necessary electrical equipment required for temporary lighting and for small power tools.

H. Provide wiring, equipment, and connections for portable or temporary heating units.

I. Provide temporary heater; make all arrangements and pay all fuel costs; supervise and maintain all heating units.

J. Provide adequate dewatering of the site as required for the work throughout the time required to complete the work as shown on the Plans and specified hereinafter.

K. Provide all other temporary facilities, services, and all items as called for in the Contact Documents.

END OF SECTION

Section 01255

CHANGE ORDER PROCEDURES

PART 1 G E N E R A L

1.01 SECTION INCLUDES

A. Procedures for processing Change Orders, including:

1. Assignment of a responsible individual for approval and communication of changes in the Work;

2. Documentation of change in Contract Price and Contract Time;

3. Change procedures, using proposals and construction contract modifications, work change directive, stipulated price change order, unit price change order, time and materials change order;

4. Execution of Change Orders;

5. Correlation of Contractor submittals.

1.02 REFERENCES

A. Rental Rate Blue Book for Construction Equipment (Data Quest Blue Book). Rental Rate is defined as the full unadjusted base rental rate for the appropriate item of construction equipment.

1.03 RESPONSIBLE INDIVIDUAL

A. Contractor shall provide a letter indicating the name and address of the individual authorized to execute change documents, and who shall also be responsible for informing others in Contractor's employ and Subcontractors of changes to the Work. The information shall be provided at the Preconstruction Conference.

1.04 DOCUMENTATION OF CHANGE IN CONTRACT PRICE AND CONTRACT TIME

A. Contractor shall maintain detailed records of changes in the Work. Provide full information required for identification and evaluation of proposed changes, and to substantiate costs of changes in the Work.

B. Contractor shall document each proposal for a change in cost or time with sufficient data to allow evaluation of the proposal.

C. Proposals shall include, as a minimum, the following information as applicable:

1. Quantities of items in the original Section 00300 – Bid Form with

additions, reductions, deletions, and substitutions.

2. When Work items were not included in the Bid Form, Contractor shall provide unit prices for the new items, with supporting information as required by the Engineer.

3. Justification for any change in Contract Time.

4. Additional data upon request.

D. For changes in the Work performed on a time-and-material basis, the following additional information may be required:

1. Quantities and description of products and equipment.

2. Taxes, insurance and bonds.

3. Dates and times work was performed, and by whom.

4. Invoices and receipts for products, rented equipment, and subcontracts, similarly documented.

E. For changes in the work performed on a time-and-materials basis, rental equipment will be paid as follows:

1. Rented equipment will be paid by actual invoice cost for the duration of time required to complete the extra work without markup for overhead and profit. If the extra work comprises only a portion of the rental invoice where the equipment would otherwise be on the site, the Contractor shall compute the hourly equipment rate by dividing the actual monthly invoice by 176. (One day equals 8 hours and one week equals 40 hours.)

2. Operating costs shall not exceed the estimated operating costs given in the Blue Book for the item of equipment. Overhead and profit will be allowed on operating cost.

F. For changes in the work performed on a time-and-materials basis using Contractor-owned equipment, use Blue Book rates as follows:

1. Contractor-owned equipment will be paid at the Blue Book Rental Rate for the duration of time required to complete the extra work without markup for overhead and profit. The Rental Rate utilized shall be the lowest cost combination of hourly, daily, weekly or monthly rates. Use 150 percent of the Rental Rate for double shifts (one extra shift per day) and 200 percent of the Rental Rate for more than two shifts per day. Standby rates shall be 50 percent of the appropriate Rental Rate shown in the Blue Book. No other rate adjustments shall apply.

2. Operating costs shall not exceed the estimated operating costs given in the Blue Book for the item of equipment. Overhead and profit will be allowed on operating cost. Operating costs will not be allowed for equipment on standby.

1.05 CHANGE PROCEDURES

A. Changes to Contract Price or Contract Time can only be made by issuance of a change order. All changes will be in accordance with the requirements of the General Conditions.

B. The Engineer will advise of minor changes in the Work not involving an adjustment to Contract Price or Contract Time as authorized by the General Conditions by issuing supplemental instructions.

C. Contractor may request clarification of Drawings, Specifications or Contract Documents or other information. Response by the Engineer to a Request for Information does not authorize the Contractor to perform tasks outside the scope of the Work. All changes must be authorized as described in this section.

1.06 PROPOSALS AND CONTRACT MODIFICATIONS

A. The Engineer may also request a proposal in the response to a Request for Information. Contractor shall prepare and submit a proposal within 7 days or as specified in the request.

B. The Contractor may propose an unsolicited change by submitting a proposal to the Engineer describing the proposed change and its full effect on the Work, with a statement describing the reason for the change and the effect on the Contract Price and Contract Time including full documentation.

1.07 WORK CHANGE DIRECTIVE

A. The Engineer may issue a signed Work Change Directive instructing the Contractor to proceed with a change in the Work. A Work Change Directive will subsequently be incorporated in a Change Order.

B. The document will describe changes in the Work and will designate a method of determining any change in Contract Price or Contract Time.

C. Contractor shall proceed promptly to execute the changes in the Work in accordance with the Work Change Directive.

1.08 STIPULATED PRICE CHANGE ORDER

A. A stipulated price Change Order will be based on an accepted proposal including the Contractor's lump sum price quotation with Schedule of Values.

1.09 UNIT PRICE CHANGE ORDER

A. Where Unit Prices for the affected items of Work are included in Section 00300 – Bid Form, the unit price Change Order will be based on the unit prices, subject to Articles 7 and 9 of the General Conditions.

B. Where unit prices of Work are not pre-determined in the Section 00300 – Bid Form, the Work Change Directive or accepted proposal will specify the unit prices to be used.

1.10 TIME-AND-MATERIAL CHANGE ORDER

A. Contractor shall provide an itemized account and supporting data after completion of change, within time limits indicated for claims in the General Conditions.

B. Engineer will determine the change allowable in Contract Price and Contract Time as provided in the General Conditions.

C. Contractor shall maintain detailed records of work done on time-and-material basis as specified in paragraph 1.04, Documentation of Change in Contract Price and Contract Time.

D. Contractor shall provide full information required for evaluation of changes and shall substantiate costs for changes in the Work.

1.11 EXECUTION OF CHANGE DOCUMENTATION

A. Engineer will issue Change Orders, Work Change Directives, or accepted proposal for signatures of parties as described in the General Conditions.

1.12 CORRELATION OF CONTRACTOR SUBMITTALS

A. For Stipulated Price Contracts, Contractor shall promptly revise the Schedule of Values and Application for Payment forms to record each authorized Change Order as a separate line item.

B. For Unit Price Contracts, the next monthly estimate of work after acceptance of a Change Order will be revised to include any new items not previously included and the appropriate unit rates.

C. Contractor shall promptly revise progress schedules to reflect any change in Contract Time, and shall revise schedules to adjust time for other items of work affected by the change, and resubmit for review.

PART 2 P R O D U C T S - Not Used

PART 3 E X E C U T I O N - Not Used

END OF SECTION

Section 01270

MEASUREMENT AND PAYMENT

PART 1 G E N E R A L

1.01 SECTION INCLUDES

A. Procedures for measurement and payment plus conditions for nonconformance assessment and nonpayment for rejected products.

1.02 AUTHORITY

A. Measurement methods delineated in Specification sections are intended to complement the criteria of this section. **In the event of conflict, the Items listed in Section 00300 – Bid Form shall govern**.

B. The Engineer will take all measurements and compute quantities accordingly.

C. Contractor shall assist by providing necessary equipment, workers, and survey personnel as required by the Engineer.

1.03 UNIT QUANTITIES SPECIFIED

A. Quantity and measurement estimates stated in the Agreement are for contract purposes only. Quantities and measurements supplied or placed in the Work and verified by the Engineer shall determine payment as stated in Article 9 of the General Conditions.

B. If the actual Work requires greater or lesser quantities than those quantities indicated in the Bid Form, provide the required quantities at the unit prices contracted, except as otherwise stated in Article 9 of the General Conditions.

C. Items of work required for completion of the project, but not listed in Section 00300 – Bid Form are considered incidental to the items listed. The cost of incidental work is to be included in the listed pay items.

1.04 MEASUREMENT OF QUANTITIES

A. Measurement by Weight: Reinforcing steel, rolled or formed steel, fittings, or other metal shapes will be measured by CRSI or AISC Manual of Steel Construction weights. Welded assemblies will be measured by CRSI or AISC Manual of Steel Construction or scale weights.

B. Measurement by Volume:

1. Stockpiles: Measured by cubic dimension using mean length, width, and height or thickness.

2. Excavation and Embankment Materials: Measured by cubic dimension using the average end area method.

C. Measurement by Area: Measured by square dimension using mean length and width or radius.

D. Linear Measurement: Measured by linear dimension, at the item centerline or mean chord.

E. Stipulated Price Measurement: By unit designated in the agreement.

F. Other: Items measured by weight, volume, area, or lineal means or combination, as appropriate, as a completed item or unit of the Work.

1.05 PAYMENT

A. Payment Includes: Full compensation for all required supervision, labor, products, tools, equipment, plant, transportation, services, and incidentals; and erection, application or installation of an item of the Work; and Contractor's overhead and profit.

B. Total compensation for required Unit Price Work shall be included in Unit Price bid in Section 00300 – Bid Form. Claims for payment as Unit Price Work, but not specifically covered in the list of unit prices contained in Section 00300, will not be accepted.

C. Interim payments for stored materials will be made only for materials to be incorporated under items covered in unit prices, unless disallowed in Supplementary Conditions.

D. Progress payments will be based on the Engineer's observations and evaluations of quantities incorporated in the Work multiplied by the unit price.

E. Final payment for Work governed by unit prices will be made on the basis of the actual measurements and quantities determined by Engineer multiplied by the unit price for Work which is incorporated in or made necessary by the Work.

1.06 NONCONFORMANCE ASSESSMENT

A. Remove and replace the Work, or portions of the Work, not conforming to the Contract Documents.

B. If, in the opinion of the Engineer, it is not practical to remove and replace the Work, the Engineer will direct one of the following remedies:

1. The nonconforming Work will remain as is, but the unit price will be adjusted to a lower price at the discretion of Engineer.

2. The nonconforming Work will be modified as authorized by the Engineer, and the unit price will be adjusted to a lower price at the discretion of the Engineer, if the modified work is deemed to be less suitable than originally specified.

C. Specification sections may modify the above remedies or may identify a specific formula or percentage price reduction.

D. The authority of the Engineer to assess the nonconforming work and identify payment adjustment is final.

1.07 NONPAYMENT FOR REJECTED PRODUCTS

A. Payment will not be made for any of the following:

1. Products wasted or disposed of in a manner that is not acceptable to Engineer.

2. Products determined as nonconforming before or after placement.

3. Products not completely unloaded from transporting vehicle.

4. Products placed beyond the lines and levels of the required Work.

5. Products remaining on hand after completion of the Work, unless specified otherwise.

6. Loading, hauling, and disposing of rejected products.

PART 2 P R O D U C T S - Not Used

PART 3 E X E C U T I O N - Not Used

END OF SECTION

Section 01321

CONSTRUCTION PHOTOGRAPHS

PART 1 G E N E R A L

1.01 SECTION INCLUDES

A. Photographic requirements for construction photographs and submittals.

1.02 SUBMITTALS

A. Refer to Section 01330 for submittal requirements.

B. Prints: Prepare 2 prints of each view and submit 1 print directly to the Engineer within 7 days of taking photographs. One print shall be retained by the Contractor in the field office at the Project site and available at all times for reference.

C. Extra Prints: When requested by the Engineer, the Contractor shall submit extra prints of photographs, with distribution directly to designated parties who will pay the costs for the extra prints directly to the photographer.

D. When required by individual sections, submit photographs taken prior to start of construction to show original site conditions.

E. When required by Contract Documents, submit photographs monthly, with Pay Estimate.

1.03 QUALITY ASSURANCE

A. Contractor shall be responsible for the timely execution of the photographs, their vantage point, and quality.

PART 2 P R O D U C T S

2.01 PRECONSTRUCTION PHOTOGRAPHS

A. Prior to the commencement of any construction, take 35mm or digital color photographs of the entire route of the project and present two set of prints to the City Engineer for their use in contract administration and inspection.

B. Photographs: Two prints; color, matte finish; 3 x 5 -inch size, mounted on 8-1/2 x 11- inch soft card stock, with left edge binding margin for three hole punch.

C. The photographs shall show on a non-reflective chalkboard readable in the photograph:

1. Job number.

2. Date and time photographs were taken.

3. Location of the photograph, house number and street, along with the project number.

D. Indicate the condition of the following:

1. Esplanades and boulevards.

2. Yards (near side and far side of street).

3. Housewalk and sidewalk.

4. Curb.

5. Area between walk and curb.

6. Particular features (yard light, shrubs, fences, trees, etc.).

7. Date shall be on negative or file.

8. Provide notation of vantage point marked for location and direction of shot, on a key plan of the site.

E. Sufficient number of photographs shall be taken to show the existence or non-existence of cracked concrete and the condition of trees, shrubs, and grass.

F. Identify each photograph with an applied label or rubber stamp on the back with the following information:

1. Name of the Project.

2. Name and address of the photographer (if a professional photographer is used).

3. Name of the Contractor.

4. Date the photograph was taken.

5. Photographs to be in plastic pockets and bound in three-ring notebook for easy access and viewing.

2.02 PROGRESS PHOTOGRAPHS

A. Take photographs at intervals, coinciding with the cutoff date associated with each application for payment. Select the vantage points for each shot each month

to best show the status of construction and progress since the last photographs were taken.

1. Vantage Points: Follow direction by the Engineer to select vantage points. During each of the following construction phases take not less than 2 of the required shots from the same vantage point each time to create a time-lapse sequence.

PART 3 E X E C U T I O N - Not Used

END OF SECTION

Section 01330

SUBMITTAL PROCEDURES

PART 1 G E N E R A L

1.01 SECTION INCLUDES

A. Submittal procedures for:

1. Schedule of Values.

2. Construction Schedules.

3. Shop Drawings, Product Data, and Sampler

4. Operations and Maintenance Data.

5. Manufacturer's Certificates.

6. Construction Photographs.

7. Project Record Documents.

8. Design Mixes.

1.02 SUBMITTAL PROCEDURES

A. Scheduling and Handling:

1. Schedule submittals well in advance of the need for the material or equipment for construction. Allow time to make delivery of material or equipment after submittal is approved.

2. Develop a submittal schedule that allows sufficient time for initial review, correction, resubmission and final review of all submittals. The Engineer will review and return submittals to the Contractor as expeditiously as possible but the amount of time required for review will vary depending on the complexity and quantity of data submitted. In no case will a submittal schedule be acceptable which allows less than 30 days for initial review by the Engineer. This time for review shall in no way be justification for delays or additional compensation to the Contractor.

3. The Engineer's review of submittals covers only general conformity to the Drawings, Specifications and dimensions which affect the layout. The Contractor is responsible for quantity determination. No quantities will be verified by the Engineer. The Contractor is responsible for any errors,

omissions or deviations from the Contract requirements; review of submittals in no way relieves the Contractor from his obligation to furnish required items according to the Drawings and Specifications.

4. Submit 5 copies of documents unless otherwise specified in the following paragraphs or in the Specifications.

5. Revise and resubmit submittals as required. Identify all changes made since previous submittal.

6. The Contractor shall assume the risk for material or equipment which is fabricated or delivered prior to approval. No material or equipment shall be incorporated into the Work or included in periodic progress payments until approval has been obtained in the specified manner.

B. Transmittal Form and Numbering:

1. Transmit each submittal to the Engineer with a Transmittal Form. A copy of the Transmittal Form is attached.

2. Sequentially number each transmittal form beginning with the number 1. Resubmittals shall use the original number with an alphabetic suffix (i.e., 2A for first resubmittal of Submittal 2 or 15C for third resubmittal of Submittal 15). Each submittal shall only contain one type of work, material, or equipment. Mixed submittals will not be accepted.

3. Identify variations from requirements of Contract Documents and identify product or system limitations.

4. For submittal numbering of video tapes, see paragraph 1.10 Video.

C. Contractor's Stamp:

1. Apply Contractor's stamp, certifying that the items have been reviewed in detail and are correct and in accordance with Contract Documents, except as noted by any requested variance.

2. As a minimum, Contractor's Stamp shall include:

   a. Contractor's name.

   b. Job number.

   c. Submittal number.

   d. Certification statement that the Contractor has reviewed the submittal and it is in compliance with the Contract Documents.

   e. Signature line for Contractor.

1.03 SCHEDULE OF VALUES

A. Submit a Schedule of Values in accordance with Section 01292 – Schedule of Values.

1.04 CONSTRUCTION SCHEDULES

A. Submit Construction Schedules as provided in Project Manual.

1.05 SHOP DRAWINGS, PRODUCT DATA, AND SAMPLES

A. Submit shop drawings in accordance with Section 01340 - Shop Drawings, Product Data, and Samples.

1.06 OPERATIONS AND MAINTENANCE DATA

A. Submit Operations and Maintenance data in accordance with Section 01782 – Operations and Maintenance Data.

1.07 MANUFACTURER'S CERTIFICATES

A. When specified in Specification sections, submit manufacturers' certificate of compliance for review by Engineer.

B. Contractor's Stamp, as described in paragraph 1.02C, shall be placed on front page of the certification.

C. Submit supporting reference data, affidavits, and certifications as appropriate.

D. Certificates may be recent or previous test results on material or product, but must be acceptable to the Engineer.

1.08 CONSTRUCTION PHOTOGRAPHS

A. Submit Construction Photographs in accordance with Section 01321 - Construction Photographs.

1.09 PROJECT RECORD DOCUMENTS

A. Submit Project Record Documents in accordance with Section 01785 – Project Record Documents.

1.10 DESIGN MIXES

A. When specified in Specifications, submit design mixes for review.

B. Contractor's Stamp, as described in paragraph 1.02C, shall be placed on front page of each design mix.

C. Mark each design mix to identify proportions, gradations, and additives for each class and type of design mix submitted. Include applicable test results on samples for each mix.

D. Maintain a copy of approved design mixes at mixing plant.

PART 2 P R O D U C T S - Not Used

PART 3 E X E C U T I O N - Not Used

END OF SECTION

Section 01340

SHOP DRAWINGS, PRODUCT DATA AND SAMPLES

PART 1 G E N E R A L

1.01 SECTION INCLUDES

A. Methods, schedule, and process to be followed for shop drawings, product data and sample submittals.

1.02 REQUIREMENT

A. Submit shop drawings, product data and samples as required by the General Conditions and as designated in the Specifications using the procedures specified in Section 01330 - Submittal Procedures and the requirements of this Section.

B. Shop drawings, product data and samples are not considered Contract Documents.

1.03 SHOP DRAWING/SUBMITTAL SCHEDULE

A. Submit a separate Shop Drawing/Submittal schedule at the same time the construction schedule is submitted. List products, materials and equipment for which Shop Drawings and other submittals are required in the order in which they appear in the Specifications. Including product data and sample submittals in schedule.

1.04 SHOP DRAWINGS

A. Submit shop drawings for review as required by the Specifications. Have shop drawings reviewed and signed by a registered professional.

B. Place Contractor's Stamp on each drawing as described in Section 01300 - Submittal Procedures.

C. On the drawings, show accurately and distinctly, the following:

1. Field and erection dimensions clearly identified as such;

2. Arrangement and section views;

3. Relation to adjacent materials or structure, including complete information for making connections between work under this Contract and work under other contracts;

4. Kinds of materials and finishes;

5. Parts list and descriptions;

6. Assembly drawings of equipment components and accessories showing their respective positions and relationships to the complete equipment package;

7. Where necessary for clarity, identify details by reference to drawing sheet and detail numbers, schedule or room numbers as shown on the Contract Drawings.

D. Make drawings to scale providing a true representation of the specific equipment or item to be furnished.

1.05 PRODUCT DATA

A. Submit product data for review as required in Specification sections.

B. Place Contractor's Stamp, on each data item submitted, as described in Section 01330 - Submittal Procedures.

C. Mark each copy to identify applicable products, models, options to be used in this Project. Supplement manufacturers' standard data to provide information unique to this Project, where required by the Specifications.

D. For products specified only by reference standard, give manufacturers, trade name, model or catalog designation and applicable reference standard.

1.06 SAMPLES

A. Submit samples for review as required by the Specifications. Have samples reviewed and signed by a registered professional.

B. Place Contractor's Stamp on each sample or a firmly attached sheet of paper, as described in Section 01330 - Submittal Procedures.

C. Submit the number of samples specified in Specifications; one of which will be retained by the Engineer.

D. Reviewed samples which may be used in the Work are identified in Specifications.

PART 2 P R O D U C T S - Not Used

PART 3 E X E C U T I O N - Not Used

END OF SECTION

Section 01410

TPDES REQUIREMENTS

PART 1 G E N E R A L

1.01 SECTION INCLUDES

A. Documentation to be prepared and signed by CONTRACTOR before conducting construction operations, in accordance with the Texas Pollutant Discharge Elimination System (TPDES) Construction General Permit Number TXR 150000 issued March 5, 2008 (the Construction General Permit).

B. Implementation, maintenance, inspection, and termination of storm water pollution prevention control measures including, but not limited to, erosion and sediment controls, storm water management plans, waste collection and disposal, off-site vehicle tracking, and other practices shown on the Drawings or specified elsewhere in this or other Specifications.

C. Review of the Storm Water Pollution Prevention Plan (SWPPP) implementation in a meeting with the ENGINEER prior to start of construction.

1.02 DEFINITIONS

A. Commencement of Construction Activities: The exposure of soil resulting from activities such as clearing, grading, and excavating.

B. Large Construction Activity: Project that:

1. Disturbs five acres or more, or

2. Disturbs less than five acres but is part of a larger common plan of development that will disturb five acres or more of land.

C. Small Construction Activity: Project that:

1. Disturbs one or more acres but less than five acres, or

2. Disturbs less than one acre but is part of a larger common plan of development that will ultimately disturb one or more acres but less than five acres.

D. TPDES Operator:

1. The person or persons who have day-to-day operational control of the construction activities, which are necessary to ensure compliance with the SWPPP for the site or other Construction General Permit conditions.

PART 2 P R O D U C T S - Not Used

PART 3 E X E C U T I O N

3.01 SITE SPECIFIC STORM WATER POLLUTION PREVENTION PLAN (SWPPP)

A. Prepare a SWPPP following Part III of the Construction General Permit.

B. Update or revise the SWPPP as needed during the construction following Part III, Section E of the Construction General Permit.

C. Submit the SWPPP and any updates or revisions to ENGINEER for review and address comments prior to commencing, or continuing construction activities.

3.02 NOTICE OF INTENT FOR LARGE CONSTRUCTION ACTIVITY

A. Fill out, sign, and date TCEQ Form 20022 (03/08) Notice of Intent (NOI) for Storm Water Discharges Associated with Construction Activity under the TPDES Construction General Permit (TXR 150000), **Attachment 1** of this Section 01410.

B. Transmit the signed Contractor's copy of TCEQ Form 20022 (03/08), along with a $325.00 check, made out to Texas Commission on Environmental Quality, and the completed Payment Submittal Form to ENGINEER at the Preconstruction Meeting or submit electronically to the TCEQ (If submitted electronically, the Contractor shall provide copies of the electronic submittal to the ENGINEER at the Preconstruction Meeting).

C. Contractor will complete a separate TCEQ Form 20022 (03/08) for City's Notice of Intent, and will submit both Notices, along with checks for application fees, to the TCEQ.

D. Submission of the Notice of Intent form by both the City and Contractor to TCEQ is required a minimum of two days before Commencement of Construction Activities.

3.03 NOTICE OF INTENT FOR SMALL CONSTRUCTION ACTIVITY

A. Fill out, sign, and date Construction Site Notice, **Attachment 2** to TPDES General Permit TXR 150000, "Small Construction Site Notice", **Attachment 2** of this Section 01410.

B. Transmit the signed Construction Site Notice to ENGINEER at least seven days prior to Commencement of Construction Activity. Also, post the signed Construction Site Notice on site at least 48 hours prior to the Commencement of Construction Activities, and keep Notice posted at all times.

3.04 CERTIFICATION REQUIREMENTS

A. Submit Contractor's name, address, and telephone number, and the names of persons or firms responsible for maintenance and inspection of erosion and sediment control measures.

B. Conduct inspections in accordance with TCEQ requirements. Ensure persons or firms responsible for maintenance and inspection of erosion and sediment control measures read, fill out, sign, and date the Erosion Control Contractor's Certification for Inspection and Maintenance. Use the EPA NPDES Construction Inspection Form, **Attachment 3** of this Section 01410.

3.05 RETENTION OF RECORDS

A. Keep a copy of this document and the SWPPP in a readily accessible location at the construction site from Commencement of Construction Activity until submission of the Notice of Termination (NOT) for Storm Water Discharges Associated with Construction Activity under TPDES Construction General Permit (TXR 150000). Contractors with day-to-day operational control over SWPPP implementation shall have a copy of the SWPPP available at a central location, on-site, for the use of all operators and those identified as having responsibilities under the SWPPP. Upon submission of the NOT, submit all required forms and a copy of the SWPPP with all revisions to ENGINEER.

3.06 REQUIRED NOTICES

A. Post the following notices from the effective date of the SWPPP until date of final site stabilization as defined in the Construction General Permit:

1. Post the TPDES permit number for Large Construction Activity, or a signed TCEQ Construction Site Notice for Small Construction Activity. Signed copies of the City's and Contractor's NOI must also be posted.

2. Post notices near the main entrance of the construction site in a prominent place for public viewing. Post name and telephone number of Contractor's local contact person, brief project description, and location of the SWPPP.

   a. If posting near a main entrance of the construction site is not feasible due to safety concerns, coordinate posting of notice with OWNER to conform to requirements of the Construction General Permit.

   b. If Project is a linear construction project (e.g.: road, utilities, etc.), post notice in a publicly accessible location near active construction. Move as necessary.

3. Post a notice to equipment and vehicles operators, instructing them to stop, check, and clean tires of debris and mud before driving onto traffic lanes. Post at each stabilized construction exit area.
4. Post a notice of waste disposal procedures in a readily visible location on site.

3.07 ON-SITE WASTE MATERIAL STORAGE

A. On-site waste material storage shall be self-contained and shall satisfy appropriate local, state, and federal rules and regulations.

B. Prepare a list of waste material to be stored on-site. Update list as necessary to include up-to-date information. Keep a copy of updated list with the SWPPP.

C. Prepare description of controls to reduce pollutants generated from on-site storage. Include storage practices necessary to minimize exposure of materials to storm water, and spill prevention and response measures consistent with best management practices. Keep a copy of the description with the SWPPP.

3.08 NOTICE OF TERMINATION

A. Submit a NOT, **Attachment 4** of this Section 01410, to ENGINEER within 30 days after:

1. Final stabilization has been achieved on all portions of the site that are the responsibility of the Contractor; or

2. Another operator has assumed control over all areas of the site that have not been stabilized; and

3. All silt fences and other temporary erosion controls have either, been removed, scheduled to be removed as defined in the SWPPP, or transferred to a new operator if the new operator has sought permit coverage.

B. CONTRACTOR will complete City's NOT and submit Contractor and City's notices to the TCEQ and MS4 entities.

END OF SECTION

Attachment 1

TCEQ

Notice of Intent (NOI) for Storm Water Discharges Associated with Construction Activity under TPDES General Permit (TXR150000)

TCEQ Office Use Only
Permit No.: TXR15
RN:
CN:
Ref No:

Sign up now for ePermits NOI at www6.tceq.state.tx.us/steers
Get Instant Permit Coverage and only pay a $225 application fee.

Reset Form

If filing a paper NOI you can pay the application fee on line? Go to https://www6.tceq.state.tx.us/epay/

IMPORTANT:
•Use the **INSTRUCTIONS** to fill out each question in this form.
•Use the attached **CUSTOMER CHECKLIST** to make certain all you filled out all required information.
•Incomplete applications **WILL** delay approval or result in **automatic Denial**.

Renewal of General Permit
Is this NOI to renew an ACTIVE permit?
Yes - What is your permit number? **Permit No. TXR15**_____
No - a permit number will be issued.

Application Fee if mailing a paper NOI:
You must pay the **$325** Application Fee to TCEQ for the application to be considered complete.
Payment and NOI must be mailed to separate addresses. See instructions for correct mailing addresses.

Provide your payment information below, for us to verify payment of the application fee:

Mailed:	Check/Money Order No.:	Company Name on checking account:
EPAY:	Voucher No.:	Is the Payment Voucher copy attached? Yes

A. OPERATOR (applicant)

1. If the applicant is currently a customer with TCEQ, what is the Customer Number (CN) issued to this entity?
CN (Search Central Registry)

2. What is the Legal Name of the entity (applicant) applying for this permit?

(The legal name must be spelled exactly as filed with the Texas Secretary of State, County, or in the legal document forming the entity.)

3. What is the name and title of the person signing the application?
(The person must be an official meeting signatory requirements in TAC 305.43(a).)

Name: Job	Title:

4. What is the Operator's (applicant) mailing address as recognized by the **US Postal Service**? (verify at USPS.com)

Address:	Suite No./Bldg. No./Mail Code:	
City:	State:	ZIP Code:
Country Mailing Information (if outside USA).	Country Code:	Postal Code:

5. Phone No.: ( )	Extension:
6. Fax No.: ( )	E-mail Address:

7. Indicate the type of Customer:

☐ Individual	☐ Sole Proprietorship-D.B.A.	☐ Limited Partnership
☐ Corporation	☐ Federal Government	☐ General Partnership
☐ State Government	☐ County Government	☐ City Government
☐ Other Government	☐ Other (describe):	

TCEQ-20022 (03/05/2008) Page 1

Attachment 1

8. Independent Operator: ☐ Yes ☐ No (If governmental entity, subsidiary, or part of a larger corporation, check "No".)

9. Number of Employees: ☐ 0-20; ☐ 21-100; ☐ 101-250; ☐ 251-500; or ☐ 501 or higher

10. Customer Business Tax and Filing Numbers *(This item is not applicable to Individuals, Government, GP or Sole Proprietor.)*
REQUIRED for Corporations and Limited Partnerships **(Verify the entity's status and filing no. with TX SOS at 512/463-5555)**

State Franchise Tax ID Number:	Federal Tax ID:
TX SOS Charter (filing) Number:	DUNS Number (if known):

B. APPLICATION CONTACT

If TCEQ needs additional information regarding this application, who should be contacted?

1. Name:	Title:	Company:
2. Phone No.: ( )	Extension:	
3. Fax No.:	E-mail Address:	

C. REGULATED ENTITY (RE) INFORMATION ON PROJECT OR SITE

1. TCEQ Issued RE Reference Number (RN): **RN**
(Search Central Registry)

2. Name of Project or Site (the name as known by the community where this facility/project is located):

(example: phase and name of subdivision or name of project that's unique to the site)

3. Does the site have a physical address?
If Yes, complete **Section A** for a physical address.
If No, complete **Section B** for site location information.

Section A: Enter the physical address for the site. **(verify it with USPS.com or other delivery source)**

Street Number:	Street Name:
City:	ZIP Code:

Section B: Enter the site location information.

If no physical address (Street Number & Street Name), provide a written location access description to the site:
(Ex.: phase 1 of Woodland subdivision located 2 miles west from intersection of Hwy 290 & IH35 accessible on Hwy 290 South)

City where the site is located or nearest city to site:	ZIP Code where site is located:

4. Identify the county where the site is located:

5. Latitude:	Longitude:

6. What is the primary business of this entity? In your own words, briefly describe the primary business of the Regulated Entity:
(Do not repeat the SIC and NAICS code)

7. What is the mailing address for the regulated entity?

Is the RE mailing address the same as the Operator? ☐ Yes, address is the same as Operator ☐ No, provide the address

Street Number:	Street Name:	
City:	State:	ZIP Code:

D. GENERAL CHARACTERISTICS

1. Is the site located on Indian Country Lands? ☐ No ☐ Yes - If Yes, do not submit this NOI. Contact EPA, Region VI
If the site is on Indian country lands, you must obtain authorization through EPA, Region VI.

2. What is the Standard Industrial Classification (SIC) code (see instructions for common codes): **(Search Osha.gov)**

Primary: _____ Secondary: _____

TCEQ-20022 (03/05/2008) Page 2

Attachment 1

3(a) What is the total number of acres disturbed? _____

3(b) Is the project site part of a larger common plan of development or sale? ☐ Yes ☐ No

If **Yes**, the total number of acres disturbed can be less than 5 acres.

If **No**, the total number of acres disturbed must be 5 or more. If the total number of acres disturbed is less than 5 then the project site does not qualify for coverage through this Notice of Intent. Coverage will be denied. See the requirements in the general permit for small construction sites.

4. Discharge Information **(all information MUST be provided or the permit will be denied)**

4(a) What is the name of the water body(s) to receive the storm water runoff or potential runoff from the site?

4(b) What is the segment number(s) of the classified water body(s) that the discharge or potential discharge will eventually reach?

4(c) Are any of the surface water bodies receiving discharges from the construction site on the latest EPA-approved CWA 303(d) list of impaired waters?

☐ Yes ☐ No

If Yes, provide the name of the impaired water body(s). _____

4(d) Is the discharge into an MS4? ☐ Yes ☐ No

If **Yes**, what is the name of the MS4 Operator? _____

Note: The general permit requires you to send a copy of the NOI to the MS4 Operator.

4(e) Is the discharge or potential discharge within the Recharge Zone, Contributing Zone, or Contributing Zone within the Transition Zone of the Edwards Aquifer?

☐ Yes ☐ No

If the answer is Yes, please note that a copy of the agency approved Plan required by the Edwards Aquifer Rule (30 TAC Chapter 213) must be included or referenced in the Storm Water Pollution Prevention Plan.

E. CERTIFICATION

Check "Yes" to the certifications below. **Failure to certify to all items will result in denial.**

☐ Yes	I certify that I have obtained a copy and understand the terms and conditions of the general permit (TXR150000).
☐ Yes	I certify that the full legal name of the entity (Operator) applying for this permit has been provided and is legally authorized to do business in Texas.
☐ Yes	I understand that a Notice of Termination (NOT) must be submitted when this authorization is no longer needed.
☐ Yes	I certify that a storm water pollution prevention plan has been developed and will be implemented prior to construction, and that is compliant with any applicable local sediment and erosion control plans, as required in the general permit TXR150000.

Operator Certification:

I, _____ _____

Typed or printed name *(Required & must be legible)* Title *(Required & legible)*

certify under penalty of law that this document and all attachments were prepared under my direction or supervision in accordance with a system designed to assure that qualified personnel properly gather and evaluate the information submitted. Based on my inquiry of the person or persons who manage the system, or those persons directly responsible for gathering the information, the information submitted is, to the best of my knowledge and belief, true, accurate, and complete. I am aware there are significant penalties for submitting false information, including the possibility of fine and imprisonment for knowing violations.

I further certify that I am authorized under **30 Texas Administrative Code §305.44** to sign and submit this document, and can provide documentation in proof of such authorization upon request.

Signature: _____ Date: _____

(Use blue ink)

TCEQ-20022 (03/05/2008) Page 3

Attachment 2

SMALL CONSTRUCTION SITE NOTICE

FOR THE
Texas Commission on Environmental Quality (TCEQ)
Storm Water Program

TPDES GENERAL PERMIT TXR150000

The following information is posted in compliance with **Part II.E.2.** of the TCEQ General Permit Number TXR150000 for discharges of storm water runoff from small construction sites. Additional information regarding the TCEQ storm water permit program may be found on the internet at:

http://www.tceq.state.tx.us/nav/permits/wq_construction.html

Operator Name:	
Contact Name and Phone Number:	
Project Description: *Physical address or description of the site's location, estimated start date and projected end date, or date that disturbed soils will be stabilized*	
Location of Storm Water Pollution Prevention Plan:	

For Small Construction Activities Authorized Under Part II.E.2. (Obtaining Authorization to Discharge) the following certification must be completed:

I _____ (Typed or Printed Name Person Completing This Certification) certify under penalty of law that I have read and understand the eligibility requirements for claiming an authorization under Part II.E.2. of TPDES General Permit TXR150000 and agree to comply with the terms of this permit. A storm water pollution prevention plan has been developed and will be implemented prior to construction, according to permit requirements. A copy of this signed notice is supplied to the operator of the MS4 if discharges enter an MS4. I am aware there are significant penalties for providing false information or for conducting unauthorized discharges, including the possibility of fine and imprisonment for knowing violations.

Signature and Title_____ Date _____

_____ *Date Notice Removed*
____*MS4 operator notified per Part II.F.3.*

Attachment 3

EPA NPDES Construction Inspection Form

The following inspection is being performed in compliance with Part 3.10. of the NPDES Region 6 Storm Water Construction General Permit [68 FR 39087, July 7, 2003]. Qualified personnel (provided by the permittee or cooperatively by multiple permittees) shall inspect disturbed areas of the construction site that have not been finally stabilized, areas used for storage of materials that are exposed to precipitation, placement and effectiveness of structural control measures, and locations where vehicles enter or exit the site. Inspections shall be performed either once every 7 days (this option not available in New Mexico per Part 9.C.1.c.) or once every 14 days and within 24 hours of the end of a storm event of 0.5 inches or greater. Where sites have been temporarily stabilized, runoff is unlikely due to winter conditions, or during seasonal arid periods in arid areas (0-10 inches of rainfall annually) and semi-arid areas (10-20 inches annually) such inspections shall be conducted at least once every month. This form is primarily intended for use with construction projects in New Mexico. Permittees on Indian Country lands in Texas, Oklahoma, Louisiana and Arkansas and some oil and gas facilities in Texas and Oklahoma may use this form if they are eligible for this permit and EPA is their NPDES permitting authority. Other facilities need to check with their NPDES authority before using this form.

If you do not know your NPDES Permit Number, contact the NOI Processing Center at 866-352-7755. This form was prepared as an example and it is not a required form for use with the permit. Alternative forms may be used if they contain all of the required information as set forth in the permit. This form and additional information regarding the NPDES Region 6 storm water program may be found on the Internet at www.epa.gov/region6/6en/w/formsw.htm. Any person with a complaint about the operation of this facility in regards to this permit should contact EPA Region 6 at (214)665-8060.

Permit Number(s) covered by this inspection (e.g., owners, developers, general contractor, builders).	
Signature and Certification in accordance with Appendix G, Section 11 of the permit.	I certify under penalty of law that this document and all attachments were prepared under my direction or supervision in accordance with a system designed to assure that qualified personnel properly gather and evaluate the information submitted. Based on my inquiry of the person or persons who manage the system, or those persons directly responsible for gathering the information, the information submitted is, to the best of my knowledge and belief, true, accurate, and complete. I am aware that there are significant penalties for submitting false information, including the possibility of fine and imprisonment for knowing violations. (Clean Water Act, 33 U.S.C. 1251 et seq.)
Date of Inspection.	
Inspector Name.	
Is there a copy of the permit language with the SWPPP?	☐ Yes ☐ No
Is the inspector qualified and are the qualifications documented in the SWPPP?	☐ Yes ☐ No
Is an NPDES storm water construction sign posted at the entrance for all permittees?	☐ Yes ☐ No

You may want to use EPA Region 6 construction checklist to assure components of the SWPPP are complete. This form, the construction sign, and the checklist are available on the Region 6 NPDES Storm Water Forms and Documents web page which may be found on the internet at http://www.epa.gov/earth1r6/6en/w/formsw.htm. In addition to the checklist, you should provide a narrative (see next page) on the existing Best Management Practices and Structural Controls found during each inspection. Any problems identified in an inspection should be corrected within 7 days. The inspection should cover all components of the SWPPP and all potential pollutants. While eroded soil is the primary pollutant of concern, do not forget to inspect for other pollutant sources such as fuel tanks, paints, solvents, stabilization materials, concrete hardner, batch plants, and construction debris. The inspector will need to update the SWPPP to reflect findings of the inspection. The site map should be updated after an inspection to show controls that have been added or removed, to ensure the site map is kept current in accordance with Part 3.11.A. of the permit.

July 29, 2003

Attachment 3

Narrative Findings of the inspection:
Observations should include any findings of Best Management Practices or controls that are not in accordance with the SWPPP. If a control is not in place or failed, observe the reason why. A control removed temporarily for work is not necessarily a violation if properly recorded in the SWPPP. If it has been removed, record why it was removed and, if applicable, when it will be reinstalled. If the control has failed, observe the conditions so a conclusion may be made as to wether the control failed for improper maintenance or improper design. The qualified inspector will know when a failed control is inadequate and should be replaced by an improved control mechanism. Qualified inspectors are to have authority to make changes to the SWPPP to assure compliance. Controls that have not been installed should be given a reason why they are not installed and/or a scheduled date for installation if they are designed for a later phase of construction. After the inspection, the SWPPP and its site map should be updated to reflect current conditions of controls and Best Management Practices at the time of the inspection. This includes removing uninstalled controls from the site map or otherwise denoting on the site map if they are no longer installed if the controls have been removed because they are no longer necessary (e.g., stabilization has been achieved in that area).

Part 3.10.G. of the permit: For each inspection required above, you must complete an inspection report. At a minimum, the inspection report must include: 1. The inspection date; 2. Names, titles, and qualifications of personnel making the inspection; 3. Weather information for the period since the last inspection (or since commencement of construction activity if the first inspection) including a best estimate of the beginning of each storm event, duration of each storm event, approximate amount of rainfall for each storm event (in inches), and whether any discharges occurred; 4. Weather information and a description of any discharges occurring at the time of the inspection; 5. Location(s) of discharges of sediment or other pollutants from the site; 6. Location(s) of BMPs that need to be maintained; 7. Location(s) of BMPs that failed to operate as designed or proved inadequate for a particular location; 8. Location(s) where additional BMPs are needed that did not exist at the time of inspection; and 9. Corrective action required including any changes to the SWPPP necessary and implementation dates.

July 29, 2003

Attachment 4

TCEQ

Notice of Termination (NOT) for Authorizations under TPDES General Permit TXR150000

TCEQ Office Use Only
Permit No.:
RN:
CN:

Reset Form

Sign up now for on line NOT at http://www.tceq.state.tx.us/permitting/steers/steers.html
Get your NOT Confirmation letter immediately after submitting the on line NOT form.

What is the permit number to be terminated?
Processing will be delayed without the permit number. TXR15_____

A. OPERATOR (applicant)

1. What is the Customer Number (CN) issued to this entity? **CN**_____
2. What is the full Legal Name of the current permittee?

This must be the current permittee of the permit to be terminated.

3. What is the applicant's mailing address as recognized by the **US Postal Service**?

Address:	Suite No./Bldg. No./Mail Code:	
City:	State:	ZIP Code:
Country Mailing Information (if outside USA).	Country Code:	Postal Code:

4. Phone No.: ( )	Extension:
5. Fax No.: ( )	E-mail Address:

B. REGULATED ENTITY (RE) INFORMATION ON PROJECT OR SITE

1. What is the TCEQ Issued RE Reference Number (RN)? **RN**_____
2. Name of Project or Site as currently permitted):

(example: phase and name of subdivision or name of project that's unique to the site)

3. Physical Address of Project or Site as currently permitted: (enter in spaces below)

Street Number:	Street Name:	
City:	ZIP Code:	County (Counties if >1):

4. If no physical address (Street Number & Street Name), provide the written location access description to the site:

C. REASON FOR TERMINATION

Check the reason for termination:

- ☐ Final stabilization has been achieved on all portions of the site that are the responsibility of the Operator and all silt fences and other temporary erosion controls have either been removed, or scheduled for removal as defined in the SWP3.
- ☐ Another permitted Operator has assumed control over all areas of the site that have not been finally stabilized, and temporary erosion controls that have been defined in the SWP3 have been transferred to the new Operator.
- ☐ The activity is now authorized under an alternate TPDES permit.
- ☐ The activity never began at this site that is regulated under the general permit.

D. CERTIFICATION

I, _____ _____
Typed or printed name Title

certify under penalty of law that this document and all attachments were prepared under my direction or supervision in accordance with a system designed to assure that qualified personnel properly gather and evaluate the information submitted. Based on my inquiry of the person or persons who manage the system, or those persons directly responsible for gathering the information, the information submitted is, to the best of my knowledge and belief, true, accurate, and complete. I am aware there are significant penalties for submitting false information, including the possibility of fine and imprisonment for knowing violations.

I further certify that I am authorized under **30 Texas Administrative Code §305.44** to sign and submit this document, and can provide documentation in proof of such authorization upon request.

Signature:_____ Date:_____
(Use blue ink)

TCEQ-20023 (02/06/2007) Page 1

Section 01450

CONTRACTOR'S QUALITY CONTROL

PART 1 G E N E R A L

1.01 SECTION INCLUDES

A. Quality assurance and control of installation and manufacturer's field services and reports.

1.02 MEASUREMENT AND PAYMENT

A. No payment will made for this item. Include the cost of Contractor's quality control in overhead cost for this project.

1.03 QUALITY ASSURANCE/CONTROL OF INSTALLATION

A. Monitor quality control over suppliers, manufacturers, products, services, site conditions, and workmanship, to produce Work of specified quality.

B. Comply fully with manufacturers' installation instructions, including each step in sequence.

C. Request clarification from the Engineer before proceeding should manufacturers' instructions conflict with Contract Documents.

D. Comply with specified standards as minimum requirements for the Work except when more stringent tolerances, codes, or specified requirements indicate higher standards or more precise workmanship.

E. Perform work by persons qualified to produce the specified level of workmanship.

1.04 REFERENCES

A. Obtain copies of standards and maintain at job site when required by individual Specification sections.

1.05 MANUFACTURERS' FIELD SERVICES AND REPORTS

A. When specified in individual Specification sections, provide material or product suppliers' or manufacturers' technical representative to observe site conditions, conditions of surfaces and installation, quality of workmanship, start-up of equipment, operator training, test, adjust, and balance of equipment as applicable, and to initiate operation, as required. Conform to minimum time requirements for start-up operations and operator training if defined in Specification sections.

B. At the Engineer's request, submit qualifications of manufacturer's representative to the Engineer 15 days in advance of required representative's services. The representative shall be subject to approval of the Engineer.

C. Manufacturer's representative shall report observations and site decisions or instructions given to applicators or installers that are supplemental or contrary to manufacturers' written instructions. Submit report within 14 days of observation to the Engineer for review.

PART 2 P R O D U C T S - Not Used

PART 3 E X E C U T I O N - Not Used

END OF SECTION

Section 01452

INSPECTION SERVICES

PART 1 G E N E R A L

1.1 SECTION INCLUDES

A. Inspection services and references

1.2 INSPECTION

A. The Engineer will appoint an Inspector as a representative of the Owner to perform inspections, tests, and other services specified in individual specification Sections

B. Alternately, the Engineer may appoint, employ, and pay an independent firm to provide additional inspection or construction management services as indicated in Section 01454 - Testing Laboratory Services.

C. Reports will be submitted by the independent firm to the Engineer, Architect/Engineer, and Owner, indicating observations and results of tests and indicating compliance or non-compliance with Contract Documents.

D. Assist and cooperate with the Inspector; furnish samples of materials, design mix, equipment, tools, and storage.

E. Notify the Engineer 24 hours prior to expected time for operations requiring services. Notify Architect/Engineer and independent firm when noted.

F. Sign and acknowledge report for Inspector.

PART 2 P R O D U C T S - Not Used

PART 3 E X E C U T I O N - Not Used

END OF SECTION

Section 01454

TESTING LABORATORY SERVICES

PART 1 G E N E R A L

1.01 SECTION INCLUDES

A. Testing laboratory services and Contractor responsibilities related to those services.

1.02 REFERENCES

A. ASTM C 1077 - Standard Practice for Laboratories Testing Concrete and Concrete Aggregates for Use in Construction and Criteria for Laboratory Evaluation.

B. ASTM D 3666 - Standard Specification for Minimum Requirements for Agencies Testing and Inspecting Bituminous Paving Materials.

C. ASTM D 3740 - Standard Practice for Minimum Requirements for Agencies Engaged in the Testing and/or Inspection of Soil and Rock as Used in Engineering Design and Construction.

D. ASTM E 329 - Standard Specification for Minimum Requirements for Agencies Engaged in the Testing and/or Inspection of Materials Used in Construction.

E. ISO/TEC Guide 25 - General Requirements for the Competence of Calibration and Testing Laboratories.

1.03 SELECTION AND PAYMENT

A. The City will select, employ, and pay for services of an independent testing laboratory to perform inspection and testing identified in Part 3 of individual Specification sections.

B. Employment of a testing laboratory by the City shall not relieve Contractor of its obligation to perform work in accordance with requirements of Contract documents.

C. The City will deduct a minimum two-hour charge for testing laboratory time from periodic progress payment when operations requiring testing or inspection are canceled without prior notification.

D. The City will deduct cost of retesting from periodic progress payment whenever failed work is removed, replaced and retested.

1.04 QUALIFICATION OF LABORATORY

A. Meet laboratory requirements of ASTM E 329 and applicable requirements of ASTM C 1077, ASTM D 3666, and ASTM D 3740.

B. Meet ISO/TEC Guide 17025 conditions for accreditation by the American Association for Laboratory Accreditation (A2LA) in specific fields of testing required in individual Specification sections.

C. If laboratory subcontracts are part of the testing services, such work will be placed with a laboratory complying with the requirements of this Section.

1.05 LABORATORY REPORTS

A. Testing laboratory shall provide and distribute copies of laboratory reports to the distribution list Project Manager provides at the pre-construction conference.

B. Keep one copy of each laboratory report distributed or faxed at the site field office for duration of the Work.

C. Laboratory will fax material supplier, Contractor and Project Manager reports that indicate failing test results by no later than close of business on the working day following test completion and review.

1.06 LIMITS ON TESTING LABORATORY AUTHORITY

A. Laboratory may not release, revoke, alter, or enlarge requirements of the Contract.

B. Laboratory may not approve or accept any portion of the Work.

C. Laboratory may not assume Contractor duties.

D. Laboratory has no authority to stop the Work.

1.07 CONTRACTOR RESPONSIBILITIES

A. Provide safe access to the Work and to manufacturer's facilities for Project Manager and for testing laboratory personnel.

B. Provide testing laboratory with a copy of the Construction Schedule and a copy of each update to Construction Schedule.

C. Notify Project Manager and testing laboratory during normal working hours of the day previous to expected time for operations requiring inspection and testing services. When Contractor fails to make timely prior notification, do not proceed with the operations requiring inspection and testing services.

D. Notify Design Consultant 24 hours in advance when Specification requires presence of Design Consultant for sampling or testing.

E. Request and monitor testing as required to provide timely results and to avoid delays to the Work. Provide samples to laboratory in sufficient time to allow required test to be performed in accordance with specified test methods before intended use of the Product.

F. Cooperate with laboratory personnel in collecting samples on site. Provide incidental labor and facilities for safe access to the Work to be tested, to obtain and handle samples at site or at source of Products to be tested, and to facilitate tests and inspections including storage and curing of test samples.

G. Make arrangements with laboratory through Project Manager. Payment for additional testing will be made in accordance with Document 00700 - General Conditions:

1. Re-testing required for failed tests.

2. Re-testing for nonconforming work.

3. Additional sampling and tests requested beyond specified requirements.

4. Insufficient notification of cancellation of tests for work scheduled but not performed.

PART 2 P R O D U C T S - Not Used

PART 3 E X E C U T I O N

3.01 CONDUCTING TESTING

A. Conform to laboratory sampling and testing methods specified in individual Specification sections to the latest issues of ASTM standards, TxDOT methods, or other recognized test standards as approved by Project Manager.

B. Requirements of this Section shall also apply to those tests for approval of materials, for mix designs, and for quality control of materials as performed by employed testing laboratories.

END OF SECTION

Section 01502

MOBILIZATION

1.01 SECTION INCLUDES

A. Mobilization of construction equipment and facilities onto the site.

1.02 MEASUREMENT AND PAYMENT

A. Unit Price Contracts. If Contract is Unit Price Contract, measurement for mobilization is on a lump sum basis.

B. Stipulated Price (Lump Sum) Contract. If Contract is Stipulated Price Contract, payment for Work in this Section is included in total Stipulated Price.

C. Mobilization payments will be included in monthly payment estimates upon written application by Contractor subject to the following provisions:

1. Authorization for payment of 50 percent of that portion of Contract Price designated for mobilization will be made upon receipt and approval by Project Manager of the following items, as applicable:

a. Safety Program (Document 00700, Paragraph 10.1.1).

b. Site Utilization Plan (Section 01145).

c. Schedule of Values (Section 01292), if any.

d. Initial Construction Photographs (Section 01321), if needed.

e. Preliminary Construction Schedule and Billing Forecast (Section 01325).

f. Construction Schedule (Section 01325 or Section 01326, as applicable).

g. Submittal Schedule (Section 01330).

h. Site specific Storm Water Pollution Prevention Plan (SWPPP) and Notice of Intent (NOI) along with storm water application fee (Section 01410), if required.

i. Contractor's Quality Control Plan (Section 01450), if required.

j. Establishment of a Field Office for Project Manager meeting requirements of Section 01520 - Temporary Field Office.

k. Traffic Control Plan (Section 01555), if required.
l. Plan for Control of Ground and Surface Water (Section 01578), if required.

m. Project Signs Submittal (Section 01580).

n. Trench Safety Program (Section 02260), if required.

o. Dewatering plan, when required.

2. Authorization for payment of the balance of that portion of Contract Price designated for mobilization will be made upon completion of the Work amounting to five percent of Original Contract Price. The amount of Contract Price designated for mobilization may not be applied in computing whether or not five percent of the Original contract Price has been obtained.

3. Mobilization payments will be subject to retainage amounts stipulated in Document 00700 – General Conditions.

PART 2 P R O D U C T S -Not Used

PART 3 E X E C U T I O N -Not Used

END OF SECTION

Section 01555

TRAFFIC CONTROL AND REGULATION

PART 1 G E N E R A L

1.01 SECTION INCLUDES

A. Requirements for signs, signals, control devices, flares, lights and traffic signals, as well as parking control.

B. Requirement for and qualifications of flagmen.

1.02 (not used)

1.03 UNIT PRICES

A. Traffic Control and Regulation will be paid on a lump sum basis and shall be considered full compensation for installation of traffic devices, relocation and removal of signs, and flagmen.

1.04 FLAGMEN

A. Use flagmen, qualified as described under paragraph 1.04.B, Uniformed Peace Officers, or paragraph 1.04.C, Certified Flagmen, to control, regulate, and direct the even flow or movement of vehicular or pedestrian traffic when construction operations encroach on public traffic lanes.

B. Uniformed Peace Officer: A person who has full-time employment as a peace officer and who receives compensation as a flagman for private employment as an individual employee or independent contractor. Private employment may be either an employee-employer relationship or on an individual basis. A flagman may not be in the employ of another peace officer and may not be a reserve peace officer.

1. A peace officer is defined as:
   a. Sheriffs and their deputies;
   b. Constables and deputy constables;
   c. Marshals or police officers of an incorporated city, town, or village; or
   d. As otherwise provided by Article 2.12, Code of Criminal Procedure, as amended.

2. A person who has full-time employment as a peace officer is one who is actively employed in a full-time capacity as a peace officer working, on average, a minimum of 32 paid hours per week, being paid at a rate of pay not less than the prevailing minimum hourly wage rate as set by the federal Wage

and Hour Act and entitled to the full benefits of participation in any retirement plan, vacation, holidays, and insurance benefits. A reserve peace officer does not qualify, under this definition, as a peace officer.

C. Flagman: A person who receives compensation as a flagman and who meets the following qualifications and requirements:

1. Required to wear a distinctive uniform, bright-colored vest, and be equipped with appropriate flagging and communication devices.

2. English speaking, with Spanish as an advantageous, but not required, primary or secondary language.

PART 2 P R O D U C T S

2.01 SIGNS, SIGNALS, AND DEVICES

A. Comply with Texas State Manual on Uniform Traffic Control Devices.

B. Traffic Cones and Drums, Flares and Lights: As approved by local jurisdictions.

PART 3 E X E C U T I O N

3.01 PUBLIC ROADS

A. Abide by laws and regulations of governing authorities when using public roads. If the Contractor's work requires that public roads be temporarily impeded or closed, approvals shall be obtained from governing authorities and permits paid for before starting any work. Coordinate activities with the Engineer.

B. Contractor shall maintain at all times a 10-foot-wide all-weather lane adjacent to work areas which shall be kept free of evaluation equipment and debris and shall be for the use of emergency vehicles, or as otherwise provided in the traffic control plan.

C. Contractor shall not obstruct the normal flow of traffic from 7:00 a.m. to 9:00 a.m. and 4:00 p.m. to 6:00 p.m. on designated major arterials or as directed by the Engineer.

D. Contractor shall maintain local driveway access to residential and commercial properties adjacent to work areas at all times.

E. Cleanliness of Surrounding Streets - Keep streets used for entering or leaving the job area free of excavated material, debris, and any foreign material resulting from construction operations.

3.02 PARKING CONTROL

A. Control vehicular parking to prevent interference with public traffic and parking, access by emergency vehicles, and City's operations.

B. Monitor parking of personnel's vehicles in existing facilities. Maintain vehicular access to and through parking areas.

C. Prevent parking on or adjacent to access roads or in non-designated areas.

3.03 FLARES AND LIGHTS

A. Provide flares and lights during hours of low visibility to delineate traffic lanes and to guide traffic.

3.04 TRAFFIC SIGNS AND SIGNALS

A. Install traffic control devices at approaches to the site and on site, at crossroads, detours, parking areas, and elsewhere as needed to direct traffic around the evaluation survey work area.

B. Install and operate traffic control signals to direct and maintain orderly flow of traffic in areas under Contractor's control and areas affected by Contractor's operations.

C. Relocate traffic signs and signals as Work progresses to maintain effective traffic control.

3.05 REMOVAL

A. Remove equipment and devices when no longer required.

B. Repair damage caused during evaluation.

END OF SECTION

Section 01561

TRENCH SAFETY SYSTEM

PART 1 G E N E R A L

1.01 SECTION INCLUDES

A. Trench safety system for the construction of trench excavations.

B. Trench safety system for structural excavations which fall under provisions of State and Federal trench safety laws.

1.02 UNIT PRICES

A. Measurement for trench safety systems used on trench excavations is on a linear foot basis measured along the centerline of the trench, including manholes and other line structures.

B. No payment will be made for trench safety systems for structural excavations under this section. Include payment for trench safety system in applicable structure installation sections.

C. Refer to Section 01270 - Measurement and payment for unit price procedures.

1.03 DEFINITIONS

A. A trench shall be defined as a narrow excavation (in relation to its depth) made below the surface of the ground. In general, the depth is greater than the width, but the width of a trench (measured at the bottom) is not greater than 15 feet.

B. The trench safety system requirements will apply to larger open excavations if the erection of structures or other installations limits the space between the excavation slope and the installation to dimensions equivalent of a trench as defined.

C. Trench Safety Systems include but are not limited to sloping, sheeting, trench boxes or trench shields, sheet piling, cribbing, bracing, shoring, dewatering or diversion of water to provide adequate drainage.

1.04 SUBMITTALS

A. Submittals shall conform to requirements of Section 01330 - Submittal Procedures.

B. Submit a safety program specifically for the construction of trench excavation. Design the trench safety program to be in accordance with OSHA 29CFR standards governing the presence and activities of individuals working in and around trench excavations.

C. Construction and shop drawings containing deviations from OSHA standards or special designs shall be sealed by a licensed Engineer retained and paid by Contractor.

D. Review of the safety program by the Engineer will only be in regard to compliance with this specification and will not constitute approval by the Engineer nor relieve Contractor of obligations under State and Federal trench safety laws.

1.05 REGULATORY REQUIREMENTS

A. Install and maintain trench safety systems in accordance with the detail specifications set out in the provision of Excavations, Trenching, and Shoring, Federal Occupation Safety and Health Administration (OSHA) Standards, 29CFR, Part 1926, Subpart P, as amended, including Final Rule, published in the Federal Register Vol. 54, No. 209 on Tuesday, October 31, 1989. The sections that are incorporated into these specifications by reference include Sections 1926-650 through 1926-652.

B. A reproduction of the OSHA standards included in "Subpart P - Excavations" from the Federal Register Vol. 54, No. 209 is available upon request to Contractors. The Contractor is responsible for obtaining a copy of this section of the Federal Register.

C. Legislation that has been enacted by the Texas Legislature with regard to Trench Safety Systems is hereby incorporated, by reference, into these specifications. Refer to Texas Health and Safety Code Ann., '756.021 (Vernon 1991).

1.06 INDEMNIFICATION

A. Contractor shall indemnify and hold harmless the Owner, its employees and agents, from any and all damages, costs (including, without limitation, legal fees, court costs, and the cost of investigation), judgments or claims by anyone for injury or death of persons resulting from the collapse or failure of trenches constructed under this Contract.

B. Contractor acknowledges and agrees that this indemnity provision provides indemnity for the Owner in case the Owner is negligent either by act or omission in providing for trench safety, including, but not limited to safety program and design reviews, inspections, failures to issue stop work orders, and the hiring of the Contractor.

PART 2 P R O D U C T S - Not Used

PART 3 E X E C U T I O N

3.01 INSTALLATION

A. Install and maintain trench safety systems in accordance with provisions of OSHA 29CFR.

B. Install specially designed trench safety systems in accordance with the Contractor's trench excavation safety program for the locations and conditions identified in the program.

C. A competent person, as identified in the Contractor's Trench Safety Program, shall verify that trench boxes and other premanufactured systems are certified for the actual installation conditions.

3.02 INSPECTION

A. Contractor, or Contractor's independently retained consultant, shall make daily inspections of the trench safety systems to ensure that the installed systems and operations meet OSHA 29CFR and other personnel protection regulations requirements.

B. If evidence of possible cave-ins or slides is apparent, Contractor shall immediately stop work in the trench and move personnel to safe locations until the necessary precautions have been taken by Contractor to safeguard personnel entering the trench.

C. Maintain a permanent record of daily inspections.

3.03 FIELD QUALITY CONTROL

A. Contractor shall verify specific applicability of the selected or specially designed trench safety systems to each field condition encountered on the project.

END OF SECTION

Section 01562

TREE AND PLANT PROTECTION

PART 1 G E N E R A L

1.01 SECTION INCLUDES

A. Tree and plant protection.

1.02 PROJECT CONDITIONS

A. Preserve and protect existing trees and plants to remain from foliage, branch, trunk, or root damage that could result from construction operations.

B. Prevent following types of damage:

1. Compaction of root zone by foot or vehicular traffic, or material storage.

2. Trunk damage from equipment operations, material storage, or from nailing or bolting.

3. Trunk and branch damage caused by ropes or guy wires.

4. Root poisoning from spilled solvents, gasoline, paint, and other noxious materials.

5. Branch damage due to improper pruning or trimming.

6. Damage from lack of water due to:

   a. Cutting or altering natural water migration patterns near root zones.

   b. Failure to provide adequate watering.

7. Damage from alteration of soil pH factor caused by depositing lime, concrete, plaster, or other base materials near roots.

8. Cutting of roots larger than 1-1/2 inches in diameter.

1.03 DAMAGE ASSESSMENT

A. When trees other than those designated for removal are destroyed or badly damaged as a result of construction operations, remove and replace with same size, species, and variety up to and including 8 inches in trunk diameter. Tree larger than 8 inches in diameter shall be replaced with an 8-inch diameter tree of the same species and variety and total contract amount will be reduced by an amount determined from the

following International Shade Tree Conference formula: 0.7854 x D^2 x $38.00 where D is diameter in inches of tree or shrub trunk measured 12 inches above grade.

PART 2 P R O D U C T S

2.01 MATERIALS

A. Asphalt Paint: Emulsified asphalt or other adhesive, elastic, antiseptic coating formulated for horticultural use on cut or injured plant tissue, free from kerosene and coal creosote.

B. Burlap: Suitable for use as tree wrapping.

C. Fertilizer: Liquid containing 20 percent nitrogen, 10 percent phosphorus, and 5 percent potash.

D. All necessary tree replacements shall be as approved by City Engineer.

PART 3 E X E C U T I O N

3.01 PROTECTION AND MAINTENANCE OF EXISTING TREES AND SHRUBS

A. Except for trees and shrubs shown on Drawings to be removed, all trees and shrubs within the project area are to remain and be protected from damage.

B. For trees or shrubs to remain, perform the following:

1. Trimming of trees and shrubs to remain shall be done only under supervision of professional tree surgeon or horticulturist.

   a. Tree pruning will be according to International Society of Arborculture specifications.

   b. Trees and shrubs requiring pruning for construction should also be pruned for balance as well as to maintain proper form and branching habit.

   c. Cut limbs at branch collar. No stubs should remain on trees. Branch cuts should not gouge outer layer of tree structure or trunk.

2. Use extreme care to prevent excessive damage to root systems.

   a. Roots in construction areas will be cut smoothly with a trencher before excavation begins. Do not allow ripping of roots with a backhoe or other equipment.

   b. Temporarily cover exposed roots with wet burlap to prevent roots from drying out.

c. Cover exposed roots with soil as soon as possible.

3. Prevent damage or compaction of root zone (area below dripline) by construction activities.

   a. Do not allow scarring of trunks or limbs by equipment or other means.

   b. Do not store construction materials, vehicles, or excavated material under dripline of trees.

   c. Do not pour liquid materials under dripline.

4. Water and fertilize trees and shrubs that will remain to maintain their health during construction period.

   a. Supplemental watering of landscaping during construction should be done once every 7 days in cold months and once every 4 days in hotter months.

   b. This watering shall consist of saturating soils at least 6 to 8 inches beneath surface.

5. Water areas currently being served by private sprinkler systems while systems are temporarily taken out of service to maintain health of existing landscapes.

6. At option of the Contractor and with the Engineer's permission, trees and shrubs to remain may be temporarily transplanted and returned to original positions under supervision of professional horticulturist.

3.02 PROTECTION

A. Protection of Trees or Shrubs in Open Area:

1. Install steel drive-in fence posts in protective circle, approximately 8 feet on center, not closer than 4 feet to trunk of trees or stems of shrubs.

2. Drive steel drive-in fence posts 3 feet minimum into ground, leaving 5 feet minimum above ground.

3. Mount steel hog-wire on fence posts.

4. For trees or shrubs in paved areas, mount concrete-filled steel pipe 2-1/2 inches in diameter minimum in rubber auto tires filled with concrete (movable posts).

B. Timber Wrap Protection for Trees in Close Proximity of Moving or Mechanical Equipment and Construction Work:

1. Wrap trunk with layer of burlap.

2. Install 2 x 4's or 2 x 5's (5-foot to 6-foot lengths) vertically, spaced 3 inches to 5 inches apart around circumference of tree trunk.

3. Tie in place with 12 to 9 gauge steel wire.

3.03 MAINTENANCE OF NEWLY PLANTED TREES

A. Show proof of capacity to water during dry periods.

B. The Contractor guarantees that trees planted for this Project shall remain alive and healthy at least until the end of a one-year warranty period and the additional one year period required by the Surface Restoration Bond.

1. Within four weeks of notice from Engineer, Contractor shall replace, at his expense, any dead trees or any trees that in the opinion of Engineer, have become unhealthy or unsightly or have lost their natural shape as a result of additional growth, improper pruning or maintenance, or weather conditions.

2. When tree must be replaced, the guarantee period for that tree shall begin on date of replacement of tree, subject to the Engineer's inspection, for no less than one year.

3. Straighten leaning trees and bear entire cost.

4. Dispose of trees rejected at any time by the Engineer at Contractor's expense.

END OF SECTION

Section 01570

STORM WATER POLLUTION CONTROL

PART 1 G E N E R A L

1.01 SECTION INCLUDES

A. Implementation of Storm Water Pollution Prevention Plans (SWP3) described in Section 01410 - TPDES Requirement.

B. Installation and maintenance of storm-water pollution prevention structures: diversion dikes, interceptor dikes, diversion swales, interceptor swales, down spout extenders, pipe slope drains, paved flumes and level spreaders. Structures are used during construction and prior to final development of the site.

C. Filter Fabric Fences:

1. Type 1: Temporary filter fabric fences for erosion and sediment control in non-channelized flow areas.

2. Type 2: Temporary reinforced filter fabric fences for erosion and sediment control in channelized flow areas.

D. Straw Bale Fence.

1.02 MEASUREMENT AND PAYMENT

A. UNIT PRICES

1. Payment for filter fabric fence is on a linear foot basis measured between limits of beginning and ending of stakes.

2. Payment for reinforced filter fabric fence is on a linear foot basis measured between limits of beginning and ending of stakes.

3. Payment for drop inlet baskets is on a unit price basis for each drop inlet basket.

4. Payment for storm inlet sediment traps is on a unit price basis for each storm inlet sediment trap.

5. Payment for storm-water-pollution-prevention structures is on a lump sum basis for the project. Earthen structures with outlet and piping includes diversion dikes, interceptor dikes, diversion swales, interceptor swales, and excavated earth-outlet sediment trap, embankment earth-outlet sediment trap, down spout extenders, pipe slope drains, paved flumes, stone outlet sediment trap, and level spreaders.

6. Payment for straw bale barrier, if included in Document 00300 - Bid Form, is

on a linear foot of accepted bale barriers, if not include in cost of storm-water-pollution-prevention structures.

7. Payment for brush berm, if included in Document 00300 - Bid Form, is on a linear foot of accepted brush berm, if not include in cost of storm- water-pollution-prevention structures.

8. Payment for sandbag barrier, if included in Document 00300 - Bid Form, is on a unit price basis for each inlet, if not include in cost of storm-water-pollution-prevention structures.

9. Payment for sediment basin with pipe outlet or stone outlet, if included in Document 00300 - Bid Form, is on a square yard basis, if not include in cost of storm-water-pollution-prevention structures.

10. Payment for inlet protection barriers, if included in Document 00300 - Bid Form, is on a unit price basis for each inlet, if not include in cost of storm-water-pollution- prevention structures.

11. Refer to Section 01270 - Measurement and Payment for unit price procedures.

B. Stipulated Price (Lump Sum) Contract. If Contract is Stipulated Price Contract, payment for Work in this Section is included in total Stipulated Price.

1.03 REFERENCE STANDARDS

A. ASTM

1. A 36 - Standard Specification for Carbon Structural Steel.

2. D698 - Standard Test Methods for Laboratory Compaction Characteristics of Soil Using Standard Effort (12,400 ft-lbf/ft3 (600 kN-m/m3)).

3. D3786 - Standard Test Method for Hydraulic Bursting Strength for Knitted Goods and Nonwoven Fabrics.

4. D 4355 - Standard Test Method for Deterioration of Geotextiles from Exposure to Ultraviolet Light and Water (Xenon-Arc Type Apparatus).

5. D 4491 - Standard Test Methods for Water Permeability of Geotextiles by Permittivity.

6. D 4632 - Standard Test Method for Grab Breaking Load and Elongation of Geotextiles.

7. D 4833 - Standard Test Method for Index Puncture Resistance of Geotextiles, Geomembranes, and Related Products.

8. D 6382 - Standard Practice for Dynamic Mechanical Analysis and Thermogravimetry of Roofing and Waterproofing Membrane Material.

B. Storm Water Management Handbook for Construction Activities prepared by City of Houston, Harris County and Harris County Flood Control District.

1.04 SYSTEM DESCRIPTIONS

A. Filter Fabric Fence Type 1 and Type 2: Install to allow surface or channel runoff percolation through fabric in sheet-flow manner and to retain and accumulate sediment. Maintain Filter Fabric Fences to remain in proper position and configuration at all times.

B. Straw Bale Fence: Install to allow surface runoff percolation through straw in sheet-flow manner and to retain and accumulate sediment. Maintain Straw Bale Fence to remain in proper position and configuration at all times.

C. Interceptor Dikes and Swales: Construct to direct surface or channel runoff around the project area or runoff from project area into sediment traps.

D. Drop Inlet Baskets: Install to allow runoff percolation through the basket and to retain and accumulate sediment. Clean accumulation of sediment to prevent clogging and backups.

E. Sediment traps: Construct to pool surface runoff from construction area to allow sediment to settle onto the bottom of trap.

1.05 SUBMITTALS

A. Conform to requirements of Section 01330 - Submittal Procedures.

B. Submit manufacturer's literature for product specifications and installation instructions.

C. Submit manufacturer s catalog sheets and other product data on geotextile or

D. filter fabrics, outlet pipe, perforated riser and connectors.

E. Submit proposed methods, equipment, materials, and sequence of operations for storm-water pollution prevention structures.

F. Submit shop drawings for Drop Inlet Baskets.

PART 2 P R O D U C T S

2.01 CONCRETE

A. Concrete: Class B in accordance with Section 03315 - Concrete for Utility Construction or as shown on the Drawings.

2.02 AGGREGATE MATERIALS

A. Use poorly graded cobbles with diameter greater than 3 inches and less than 5 inches.

B. Provide gravel lining in accordance with Section 2320 - Utility Backfill Materials or as shown on the drawings.

C. Provide clean cobbles and gravel consisting of crushed concrete or stone. Use clean, hard crushed concrete or stone free from adherent coatings, salt, alkali, dirt, clay, loam, shale, soft or flaky materials, or organic matter.

D. Sediment Pump Pit Aggregate: Use nominal 2-inch diameter river gravel.

2.03 PIPE

A. Polyethylene culvert pipe or PVC sewer pipe in accordance with Section 02505- High Density Polyethylene (HDPE) Solid and Profile Wall Pipe and Section 02506 Polyvinyl Chloride Pipe or as shown on the Drawings.

B. Inlet Pipes: Galvanized steel pipe in accordance with Section 02642 Corrugated Metal Pipe or as shown on the Drawings.

C. Standpipe for Sediment Pump Pits: Galvanized round culvert pipe or round PVC pipe, minimum of 12-inch and a maximum of 24-inch diameter, perforate at 6 to 12 inch centers around circumference.

2.04 GEOTEXTILE FILTER FABRIC

A. Woven or nonwoven geotextile filter fabric made of either polypropylene, polyethylene, ethylene, or polyamide material, in continuous rolls of longest practical length.

B. Grab Strength: 100 psi in any principal direction (ASTM D-4632), Mullen burst strength >200 psi (ASTM D-3786), and equivalent opening size between 50 and 140.

C. Furnish ultraviolet inhibitors and stabilizers for minimum 6 months of expected usable construction life at temperature range of 0 degrees F to 120 degrees F.

D. Mirafi, Inc., Synthetic Industries, or equivalent.

2.05 FENCING

A. Wire Fencing: Woven galvanized steel wire, 14 gauge by 6-inch square mesh spacing, minimum 24 inch roll or sheet width of longest practical length.

B. Fence Stakes: Nominal 2 by 2 inch moisture-resistant treated wood or steel posts (min. of 1.25 lbs. per linear foot and Brinell Hardness greater than 140) with safety caps on top; length as required for minimum 8 inch bury and full height of filter fabric.

2.06 SANDBAGS

A. Provide woven material made of polypropylene, polyethylene, or polyamide material.

1. Minimum unit weight of four ounces per square yard.

2. Minimum grab strength of 100 psi in any principal direction (ASTM D4632)

3. Mullen burst strength exceeding 300 psi (ASTM D3786).

4. Ultraviolet stability exceeding 70 percent.

5. Size: Length:18 to 24 inches. Width: 12 to 18 inches. Thickness: 6 to 8 inches. Weight: 50 to 125 pounds.

2.07 DROP INLET BASKET

A. Provide steel frame members in accordance with ASTM A36.

B. Construct top frame of basket with two short sides of 2 inch by 2 inch and single long side of 1 inch by 1 inch, 1/8 inch angle iron. Construct basket hangers of 2 inch by 1/4 inch iron bars. Construct bottom frame of 1 inch by 1/4 inch iron bar or 1/4 inch plate with center 3 inches removed. Use minimum 1/4 inch diameter iron rods or equivalent for sides of inlet basket. Weld minimum of 14 rods in place between top frame/basket hanger and bottom frame. Exact dimensions for top frame and insert basket will be determined based on dimensions of type of inlet being protected.

2.08 STRAW BALE

A. Straw: Standard-baled agricultural hay bound by wire, nylon, or polypropylene rope. Do not use jute or cotton binding.

B. Straw Bale Stakes (applicable where bales are on soil): No. 3 (3/8 diameter) reinforcing bars, deformed or smooth at Contractor's option, length as required for minimum 18 inch bury and full height bales.

PART 3 E X E C U T I O N

3.01 PREPARATION, INSTALLATION AND MAINTAINANCE

A. Provide erosion and sediment control structures at locations shown on the Drawings.

B. Do not clear, grub or rough cut until erosion and sediment control systems are in place unless approved by Project Manger to allow installation of erosion and sediment control systems, soil testing and surveying.

C. Maintain existing erosion and sediment control systems located within project site until acceptance of Project or until directed by Project Manger to remove and discard existing system.

D. Regularly inspect and repair or replace damaged components of erosion and sediment control structures. Unless otherwise directed, maintain erosion and sediment control structure until project area stabilization is accepted. . Redress and replace granular fill at outlets as needed to replenish depleted granular fill. Remove erosion and sediment control structures promptly when directed by Project Manger. Dispose of materials in accordance with Section 01576 - Waste Material Disposal.

E. Remove and dispose sediment deposits at the designated spoil site for the Project. If a project spoil site is not designated on Drawings, dispose of sediment off site at approved location in accordance with Section 01576 - Waste Material Disposal.

F. Unless otherwise shown on the Drawings, compact embankments, excavations, and trenches in accordance with Section 02315 Roadway Excavation or Section 2317 Excavation and Backfill for Utilities.

G. Prohibit equipment and vehicles from maneuvering on areas outside of dedicated right of way and easements for construction. Immediately repair damage caused by construction traffic to erosion and sediment control structures.

H. Protect existing trees and plants in accordance with Section 1562 - Tree and Plant Protection.

3.02 SEDIMENT TRAPS

A. Install sediment traps so that surface runoff shall percolate through system in sheet flow fashion and allow retention and accumulation of sediment.

B. Inspect sediment traps after each rainfall, daily during periods of prolonged rainfall, and at a minimum once each week. Repair or replace damaged sections immediately.

C. Use fill material for embankment in accordance with Section 02320 - Utility Backfill Materials.

D. Excavation length and height shall be as specified on Drawings. Use side slopes of 2:1 or flatter.

E. Stone outlet sediment traps:

1. Maintain minimum of 6 inches between top of core material and top of stone outlet, minimum of 4 inches between bottom of core material and existing ground and minimum of 1 foot between top of stone outlet and top of embankment.
2. Embed cobbles minimum of 4 inches into existing ground for stone outlet. Core shall be minimum of 1 foot in height and in width and wrapped in triple layer of geotextile filter fabric.

F. Sediment Basin with Pipe Outlet Construction Methods: Install outlet pipe and riser as shown on the Drawings.

G. Remove sediment deposits when design basin volume is reduced by one- third or sediment level is one foot below principal spillway crest, whichever is less.

3.03 FILTER FABRIC FENCE CONSTRUCTION METHODS

A. Fence Type 1:

1. Install stakes 3 feet on center maximum and firmly embed minimum 8 inches in soil. If filter fabric is factory preassembled with support netting, then maximum support spacing is 8 feet. Install wood stakes at a slight angle toward the source of anticipated runoff.

2. Trench in the toe of the fence lines so the downward face of the trenches is flat and perpendicular to direction of flow. V-trench configuration as shown on Drawings may also be used.

3. Lay fabric along edges of trenches in longest practical continuous runs to minimize joints. Make joints only at a support post. Splice with minimum 6-inch overlap and seal securely.

4. Staple filter fabric to stakes at maximum 3 inches on center. Extend fabric minimum 18 inches and maximum 36 inches above natural ground.

5. Backfill and compact trench.

B. Fence Type 2:

1. Layout fence same as for Type 1.

2. Install stakes at 6 feet on center maximum and at each joint in wire fence, firmly embedded 1-foot minimum, and inclined it as for Type 1.

3. Tie wire fence to stakes with wire at 6 inches on center maximum. Overlap joints minimum one bay of mesh.

4. Install trench same as for Type 1.

5. Fasten filter fabric wire fence with tie wires at 3 inches on center maximum.

6. Layout fabric same as for Type 1. Fasten to wire fence with wire ties at 3 inches on center maximum and, if applicable, to stakes above top of wire fence it as for Type 1.

7. Backfill and compact trench.

C. Attach filter fabric to wooden fence stakes spaced a maximum of 6 feet apart or steel fence stakes spaced a maximum of 8 feet apart and embedded a minimum of 12 inches. Install stakes at a slight angle toward source of anticipated runoff.

D. Trench in toe of filter fabric fence with spade or mechanical trencher so that downward face of trench is flat and perpendicular to direction of flow. A V-trench configuration may also be used. Lay filter fabric along edges of trench. Backfill and compact trench upon completion of Construction.

E. Filter fabric fence shall have a minimum height of 18 inches and a maximum height of 36 inches above natural ground.

F. Cut length of fence to minimize use of joints. When joints are necessary, splice fabric together only at support post with minimum 6 inch overlap and seal securely.

G. Triangular Filter Fabric Fence Construction Methods

1. Attach filter fabric to wire fencing, 18 inches on each side. Provide a fabric cover and skirt with continuous wrapping of fabric. Skirt should form continuous extension of fabric on upstream side of fence.

2. Secure triangular fabric filter fence in place using one of the following methods: a. Toe-in skirt 6 inches with mechanically compacted material; b. Weight down skirt with continuous layer of 3-inch to 5-inch graded rock; or c. Trench-in entire structure 4 inches.

3. Anchor triangular fabric filter fence structure and skirt securely in place using 6-inch wire staples on 2-foot centers on both edges and on skirt, or staked using 18-inch by 3/8-inch diameter re-bar with tee ends.

4. Lap fabric filter material by 6 inches to cover segment joints. Fasten joints with galvanized shoat rings.

B. Reinforced Filter Fabric Barrier Construction Methods

1. Attach woven wire fence to fence stakes.

2. Securely fasten filter fabric material to wire fence with tie wires.

3. When used in swales, ditches or diversions, elevation of barrier at top of filter fabric at flow line location in channel shall be lower than bottom elevation of filter fabric at ends of barrier or top of bank, whichever is less, in order to keep storm water discharge in channel from overtopping bank.

4. Remove sediment deposits when silt reaches depth one-third height of barrier or 6 inches, whichever is less.

3.04 DIKE AND SWALE

A. Unless otherwise indicated, maintain minimum dike height of 18 inches, measured from cleared ground at up slope toe to top of dike. Maintain side slopes of 2:1 or flatter.

B. Dike and Swale Stabilization: When shown on the Drawings, place gravel lining 3 inches thick and compacted into the soil or 6 inches thick if truck crossing is expected. Extend gravel lining across bottom and up both sides of swale minimum height of 8 inches vertically, above bottom. Gravel lining on dike side shall extend up the up slope side of dike a minimum height of 8 inches, measured vertically from interface of existing or graded ground and up slope toe of dike, as shown on Drawings.

C. Divert flow from dikes and swales to sediment basins, stabilized outlets, or sediment trapping devices of types and at locations shown on Drawings. Grade dikes and swales as shown on Drawings, or, if not specified, provide positive drainage with maximum grade of 1 percent to outlet or basin.

D. Clear in accordance with Section 2233 - Clearing and Grubbing Compact embankments in accordance with Section 2315 - Roadway Excavation.

E. Carry out excavation for swale construction so that erosion and water pollution is minimal. Minimum depth shall be 1 foot and bottom width shall be 4 feet, with level swale bottom. Excavation slopes shall be 2:1 or flatter. Clear, grub and strip excavation area of vegetation and root material.

3.05 DOWN SPOUT EXTENDER

A. Down spout extender shall have slope of approximately 1 percent. Use pipe diameter of 4 inches or as shown on the Drawings. Place pipe in accordance with Section 2317 - Bedding and Backfill for Utilities.

3.06 PIPE SLOPE DRAIN

A. Compact soil around and under drain entrance section to top of embankment in lifts appropriately sized for method of compaction utilized.

B. Inlet pipe shall have slope of 1 percent or greater. Use pipe diameter as shown on the Drawings.

C. Top of embankment over inlet pipe and embankments directing water to pipe shall be at least 1 foot higher at all points than top of inlet pipe.

D. Pipe shall be secured with hold-down grommets spaced 10 feet on centers.

E. Place riprap apron with a depth equal to pipe diameter with 2:1 side slopes.

3.07 PAVED FLUME

A. Compact soil around and under the entrance section to top of the embankment in lifts appropriately sized for method of compaction utilized.

B. Construct subgrade to required elevations. Remove and replace soft sections and unsuitable material. Compact subgrade thoroughly and shape to a smooth, uniform

surface.

C. Construct permanent paved flumes in accordance with Drawings.

D. Remove sediment from riprap apron when sediment has accumulated to depth of one foot.

3.08 LEVEL SPREADER

A. Construct level spreader on undisturbed soil and not on fill. Ensure that spreader lip is level for uniform spreading of storm runoff.

B. Maintain at required depth, grade, and cross section as specified on Drawings. Remove sediment deposits as well as projections or other irregularities which will impede normal flow.

3.09 INLET PROTECTION BARRIER

A. Place sandbags and filter fabric fences at locations shown on the SWP3.

3.10 DROP INLET BASKET CONSTRUCTION METHODS

A. Fit inlet insert basket into inlet without gaps around insert at locations shown on the SWP3. B. Support for inlet insert basket shall consist of fabricated metal as shown on Drawings. C. Push down and form filter fabric to shape of basket. Use sheet of fabric large enough to be supported by basket frame when holding sediment and extend at least 6 inches past frame. Place inlet grates over basket/frame to serve as fabric anchor. D. Remove sediment deposit after each storm event and whenever accumulation exceeds 1-inch depth during weekly inspections .

3.11 STRAW BALE FENCE CONSTRUCTION METHODS

A. Place bales in row with ends tightly abutting adjacent bales. Place bales with bindings parallel to ground surface.

B. Embed bale in soil a minimum of 4 inches.

C. Securely anchor bales in place with Straw Bale Stakes driven through bales a minimum of 18-inches into ground. Angle first stake in each bale toward previously laid bale to force bales together.

D. Fill gaps between bales with straw to prevent water from channeling between bales. Wedge carefully in order not to separate bales.

E. Replace with new straw bale fence every two months or as required by Project Manager.

3.12 BRUSH BERM CONSTRUCTION METHODS

A. Construct brush berm along contour lines by hand placing method. Do not use machine placement of brush berm.

B. Use woody brush and branches having diameter less than 2-inches with 6- inches overlap. Avoid incorporation of annual weeds and soil into brush berm.

C. Use minimum height of 18-inches measured from top of existing ground at upslope toe to top of berm. Top width shall be 24 inches minimum and side slopes shall be 2:1 or flatter.

D. Embed brush berm into soil a minimum of 4-inches and anchor using wire, nylon or polypropylene rope across berm with a minimum tension of 50 pounds. Tie rope securely to 18-inch x 3/8-inch diameter rebar stakes driven into ground on 4-foot centers on both sides of berm.

3.13 STREET AND SIDEWALK CLEANING

A. Keep areas clean of construction debris and mud carried by construction vehicles and equipment. If necessary, install stabilized construction exits at construction, staging, storage, and disposal areas, following Section 01575- Stabilized Construction Exit.

B. In lieu of or in addition to stabilized construction exits, shovel or sweep pavements as required to keep areas clean. Do not waterhose or sweep debris and mud off street into adjacent areas, except, hose sidewalks during off-peak hours, after sweeping.

3.14 WASTE COLLECTION AREAS

A. Prevent water runoff from passing through waste collection areas, and prevent water runoff from waste collection areas migrating outside collection areas.

3.15 EQUIPMENT MAINTENANCE AND REPAIR

A. Confine maintenance and repair of construction machinery and equipment to areas specifically designated for that purpose, so fuels, lubricants, solvents, and other potential pollutants are not washed directly into receiving streams or storm water conveyance systems. Provide these areas with adequate waste disposal receptacles for liquid and solid waste. Clean and inspect maintenance areas daily.

B. Where designated equipment maintenance areas are not feasible, take precautions during each individual repair or maintenance operation to prevent potential pollutants from washing into streams or conveyance systems. Provide temporary waste disposal receptacles.

3.16 VEHICLE/ EQUIPMENT WASHING AREAS

A. Install wash area (stabilized with coarse aggregate) adjacent to stabilized construction exit(s), as required to prevent mud and dirt run-off. Release wash water into drainage swales or inlets protected by erosion and sediment controls. Build wash areas following Section 01575- Stabilized Construction Exit. Install gravel or rock base beneath wash areas.

B. Wash vehicles only at designated wash areas. Do not wash vehicles such as concrete delivery trucks or dump trucks and other construction equipment at locations where runoff flows directly into watercourses or storm water conveyance systems.

C. Locate wash areas to spread out and evaporate or infiltrate wash water directly into ground, or collect runoff in temporary holding or seepage basins.

3.17 WATER RUNOFF AND EROSION CONTROL

A. Control surface water, runoff, subsurface water, and water from excavations and structures to prevent damage to the Work, the site, or adjoining properties.

B. Control fill, grading and ditching to direct water away from excavations, pits, tunnels, and other construction areas, and to direct drainage to proper runoff courses to prevent erosion, sedimentation or damage.

C. Provide, operate, and maintain equipment and facilities of adequate size to control surface water.

D. Dispose of drainage water to prevent flooding, erosion, or other damage to the site or adjoining areas. Follow environmental requirements.

E. Retain existing drainage patterns external to the site by constructing temporary earth berms, sedimentation basins, retaining areas, and temporary ground cover as required to control conditions.

F. Plan and execute construction and earth work to control surface drainage from cuts and fills, and from borrow and waste disposal areas, to prevent erosion and sedimentation.

1. Hold area of bare soil exposed at one time to a minimum.

2. Provide temporary controls such as berms, dikes, and drains.

G. Construct fill and waste areas by selective placement to eliminate surface silts or clays which will erode.

H. Inspect earthwork periodically to detect start of erosion. Immediately apply corrective measures as required to control erosion.

I. Dispose of sediments offsite, not in or adjacent to streams or floodplains, nor allow sediments to flush into streams or drainage ways. Assume responsibility for offsite disposal location.

J. Unless otherwise indicated, compact embankments, excavations, and trenches by mechanically blading, tamping, and rolling soil in maximum of 8- inch layers. Provide compaction density at minimum 90 percent Standard Proctor ASTM D-698-78 density. Make at least one test per 500 cubic yards of embankment.

K. Do not maneuver vehicles on areas outside of dedicated rights-of-way and easements

for construction. Immediately repair damage to erosion and sedimentation control systems caused by construction traffic.

L. Do not damage existing trees intended to remain.

3.18 REMOVAL OF CONTROLS

A. Remove erosion and sediment controls when the site is finally stabilized or as directed by Project Manager.

B. Dispose of sediments and waste products following Section 01505- Temporary Facilities.

END OF SECTION

Section 01575

STABILIZED CONSTRUCTION ACCESS

PART 1 G E N E R A L

1.01 SECTION INCLUDES

A. Installation and removal of erosion and sediment control for stabilized construction access used during construction and prior to final development of site, as shown in City of Houston Standard Construction details, DWG No. 01571-01.

1.02 MEASUREMENT AND PAYMENT

A. Unit Price Contracts. If Contract is Unit Price Contract, payment for work in this Section will be based on the following:

1. Stabilized construction roads, parking areas, access and wash areas: per square yard of aggregate/recycled concrete without reinforcing placed in 8-inch layers. No separate payment will be made for street cleaning necessary to meet TPDES requirements. Include cost of work for street cleaning under related Specification section.

B. Stipulated Price (Lump Sum) Contracts. If the Contract is a Stipulated Price Contract, include payment for work under this Section in the total Stipulated Price.

1.03 SUBMITTALS

A. Conform to requirements of Section 01330 - Submittal Procedures.

B. Submit manufacturer's catalog sheets and other Product Data on geotextile fabric.

C. Submit sieve analysis of aggregates conforming to requirements of this Specification.

1.04 REFERENCES

A. ASTM D 4632 - Standard Test Method for Grab Breaking Load and Elongation of Geotextiles.

B. Storm Water Quality Management Handbook for Construction Activities prepared by the City of Houston, Harris County and Harris County Flood Control District.

PART 2 P R O D U C T S

2.01 GEOTEXTILE FABRIC

A. Provide woven or non-woven geotextile fabric made of polypropylene, polyethylene, ethylene, or polyamide material.

B. Geotextile fabric: Minimum grab strength of 200 lbs in any principal direction (ASTM D-4632) and equivalent opening size between 50 and 140.

C. Geotextile and threads: Resistant to chemical attack, mildew, and rot and contain ultraviolet ray inhibitors and stabilizers to provide minimum of six months of expected usable life at temperature range of 0 to 120 degrees F.

D. Representative Manufacturers: Mirafi, Inc. or equal.

2.02 COARSE AGGREGATES

A. Coarse aggregate: Crushed stone, gravel, crushed blast furnace slag, or combination of these materials. Aggregate shall be composed of clean, hard, durable materials free from adherent coatings of, salt, alkali, dirt, clay, loam, shale, soft or flaky materials, or organic and injurious matter.

B. Coarse aggregates to consist of open graded rock 2” to 8” in size.

PART 3 EXECUTION

3.01 PREPARATION AND INSTALLATION

A. Provide stabilized construction roads and access at construction, staging, parking, storage, and disposal areas to keep street clean of mud carried by construction vehicles and equipment. Construct erosion and sediment controls in accordance with Drawings and Specification requirements.

B. Do not clear grub or rough cut until erosion and sediment control systems are in place, unless approved by Project Manager to allow soil testing and surveying.

C. Maintain existing construction site erosion and sediment control systems until acceptance of the Work or until removal of existing systems is approved by Project Manager.

D. Regularly inspect, repair or replace components of stabilized construction access. Unless otherwise directed, maintain stabilized construction roads and access until the City accepts the Work. Remove stabilized construction roads and access promptly when directed by Project Manager. Discard removed materials off-site.

E. Remove and dispose of sediment deposits at designated spoil site for Project. If a spoil site is not designated on Drawings, dispose of sediment off-site at a location not in or adjacent to stream or flood plain. Assume responsibility for off-site disposal.

F. Spread compacted and stabilized sediment evenly throughout site. Do not allow sediment to flush into streams or drainage ways. Dispose of contaminated sediment in accordance with existing federal, state, and local rules and regulations.

G. Prohibit equipment and vehicles from maneuvering on areas outside of dedicated rights-of-way and easements for construction. Immediately repair damage to erosion and sediment control systems caused by construction traffic.

H. Conduct construction operations in conformance with erosion control requirements of Specification 01570 – Storm Water Pollution Control.

3.02 CONSTRUCTION MAINTENANCE

A. Provide stabilized access roads, subdivision roads, parking areas, and other on-site vehicle transportation routes where shown on Drawings.

B. Provide stabilized construction access and vehicle washing areas, when approved by Project Manager, of sizes and at locations shown on Drawings or as specified in this Section.

C. Clean tires to remove sediment on vehicles leaving construction areas prior to entering public right-of-ways. Construct wash areas needed to remove sediment. Release wash water into drainage swales or inlets protected by erosion and sediment control measures.

D. Details for stabilized construction access are shown on Drawings. Construct other stabilized areas to same requirements. Maintain minimum roadway widths of 14 feet for one-way traffic and 20 feet for two-way traffic and of sufficient width to allow ingress and egress. Place geotextile fabric as a permeable separator to prevent mixing of coarse aggregate with underlying soil. Limit exposure of geotextile fabric to elements between laydown and cover to a maximum 14 days to minimize potential damage.

E. Grade roads and parking areas to provide sufficient drainage away from stabilized areas. Use sandbags, gravel, boards, or similar materials to prevent sediment from entering public right-of-ways, waterways or storm water conveyance systems.

F. Inspect and maintain stabilized areas daily. Provide periodic top dressing with additional coarse aggregates to maintain required depth. Repair and clean out damaged control systems used to trap sediment. Immediately remove spilled, dropped, washed, or tracked sediment from public right-of- ways.

G. Maintain lengths of stabilized areas as shown on Drawings or a minimum of 50 feet. Maintain a minimum thickness of 8 inches. Maintain minimum widths at all points of ingress or egress.

H. Stabilize other areas with the same thickness, and width of coarse aggregate required for stabilized construction access, except where shown otherwise on Drawings.

I. Stabilized areas may be widened or lengthened to accommodate truck washing areas when authorized by Project Manager.

J. Clean street daily before end of workday. When excess sediments have tracked onto streets, Project Manager may direct Contractor to clean street as often as necessary. Remove and legally dispose of sediments.

K. Use other erosion and sediment control measures to prevent sediment runoff during rain periods and non-working hours and when storm discharges are expected.

END OF SECTION

Section 01576

WASTE MATERIAL DISPOSAL

PART 1 G E N E R A L

1.01 SECTION INCLUDES

A. Disposal of waste material and salvageable material.

1.02 UNIT PRICES

A. No separate payment will be made for waste material disposal under this Section. Include payment in unit price for related sections.

1.03 SUBMITTALS

A. Submittals shall conform to requirements of Section 01330 - Submittal Procedures.

B. Submit a copy of an approved Permit, issued by the Flood Plain Manager having jurisdiction over the site, prior to disposal of excess material in areas designated as being in a "100-year Flood Hazard Area".

C. Obtain and submit disposal permits for proposed disposal sites if required by local ordinances.

D. Submit a copy of written permission from property owner, along with description of property, prior to disposal of excess material adjacent to the Project. Submit a written and signed release from property owner upon completion of disposal work.

PART 2 P R O D U C T S - Not Used

PART 3 E X E C U T I O N

3.01 SALVAGEABLE MATERIAL

A. Excavated Material: When indicated on Drawings, load, haul, and deposit excavated material at a location selected by the Contractor and approved by the Engineer.

B. Base, Surface, and Bedding Material: Load shell, gravel, bituminous, or other base and surfacing material shall be disposed of offsite to a location selected by the Contractor and approved by the Engineer.

C. Pipe Culvert: Load culverts shall be disposed of offsite to a location selected by the Contractor and approved by the Engineer.

D. Other Salvageable Materials: Conform to requirements of individual Specification Sections.

3.02 EXCESS MATERIAL

A. Vegetation, rubble, broken concrete, debris, asphaltic concrete pavement, excess soil, and other materials not designated for salvage, shall become the property of Contractor and shall be removed from the job site and legally disposed of.

B. Excess soil may be deposited on private property adjacent to the Project when written permission is obtained from property owner. See Paragraph 1.03 D above.

C. Verify the flood plain status of any proposed disposal site. Do not dispose of excavated materials in an area designated as within the 100-year Flood Hazard Area unless a Permit has been obtained. Excess material placed in a "100-year Flood Hazard Area" without a Permit, shall be removed by Contractor at no additional cost to the Owner.

D. Waste materials shall be removed from the site on a daily basis, such that the site is maintained in a neat and orderly condition.

END OF SECTION

Section 01578

CONTROL OF GROUND WATER AND SURFACE WATER

PART 1 G E N E R A L

1.01 SECTION INCLUDES

A. Dewatering, depressurizing, draining, and maintaining trenches, shaft excavations, structural excavations, and foundation beds in a stable condition, and controlling ground water conditions for tunnel excavations.

B. Protecting work against surface runoff and rising floodwaters.

C. Disposing of removed water.

1.02 METHOD OF PAYMENT

A. Measurement for control of ground water and surface water, if included in Document 00300- Bid Form, will be on either a lump sum basis or a linear foot basis for continuous installations of wellpoints, eductor wells, or deep wells.

B. If not included in the unit price schedule, include the cost to control ground water and surface water in unit price for work requiring such controls.

C. Follow Section 01290- Payment Procedures for unit price procedures.

1.03 REFERENCES

A. ASTM D 698 - Test Methods for Moisture-Density Relations of Soils and Soil-Aggregate Mixtures, Using 5.5-lb (2.49 kg) Rammer and 12-inch (304.8 mm) Drop.

B. Federal Regulations, 29 CFR Part 1926, Standards-Excavation, Occupational Safety and Health Administration (OSHA).

C. Federal Register 40 CFR (Vol. 55, No. 222) Part 122, EPA Administered Permit Programs (NPDES), Para.122.26(b)(14) Storm Water Discharge.

1.04 DEFINITIONS

A. Ground water control includes both dewatering and depressurization of water-bearing soil layers.

1. Dewatering includes lowering the water table and intercepting seepage which would otherwise emerge from slopes or bottoms of excavations, or into tunnels and shafts, and disposing of removed water. The intent of dewatering is to increase stability of tunnel excavations and excavated slopes; prevent

dislocation of material from slopes or bottoms of excavations; reduce lateral loads on sheeting and bracing; improve excavating and hauling characteristics of excavated material; prevent failure or heaving of the bottom of excavations; and to provide suitable conditions for placement of backfill materials and construction of structures and other installations.

2. Depressurization includes reduction in piezometric pressure within strata not controlled by dewatering alone, as required to prevent failure or heaving of excavation bottom or instability of tunnel excavations.

B. Excavation drainage includes keeping excavations free of surface and seepage water.

C. Surface drainage includes use of temporary drainage ditches and dikes and installation of temporary culverts and sump pumps with discharge lines as required to protect the Work from any source of surface water.

D. Equipment and instrumentation for monitoring and control of the ground water control system includes piezometers and monitoring wells, and devices, such as flow meters, for observing and recording flow rates.

1.05 PERFORMANCE REQUIREMENTS

A. Conduct subsurface investigations to identify groundwater conditions and to provide parameters for design, installation, and operation of groundwater control systems.

B. Design a ground water control system, compatible with requirements of Federal Regulations 29 CFR Part 1926 and Section 01561 - Trench Safety Systems, to produce the following results:

1. Effectively reduce the hydrostatic pressure affecting:

a. Excavations.

b. Tunnel excavation, face stability or seepage into tunnels.

2. Develop a substantially dry and stable subgrade for subsequent construction operations.

3. Preclude damage to adjacent properties, buildings, structures, utilities, installed facilities, and other work.

4. Prevent the loss of fines, seepage, boils, quick condition, or softening of the foundation strata.

5. Maintain stability of sides and bottom of excavations.

C. Provide ground water control systems may include single-stage or multiple-stage well point systems, eductor and ejector-type systems, deep wells, or combinations of these equipment types.

D. Provide drainage of seepage water and surface water, as well as water from any other source entering the excavation. Excavation drainage may include placement of drainage materials, such as crushed stone and filter fabric, together with sump pumping.

E. Provide ditches, berms, pumps and other methods necessary to divert and drain surface water from excavation and other work areas.

F. Locate ground water control and drainage systems so as not to interfere with utilities, construction operations, adjacent properties, or adjacent water wells.

G. Assume sole responsibility for ground water control systems and for any loss or damage resulting from partial or complete failure of protective measures and any settlement or resultant damage caused by the ground water control operations. Modify ground water control systems or operations if they cause or threaten to cause damage to new construction, existing site improvements, adjacent property, or adjacent water wells, or affect potentially contaminated areas. Repair damage caused by ground water control systems or resulting from failure of the system to protect property as required.

H. Provide an adequate number of piezometers installed at the proper locations and depths as required to provide meaningful observations of the conditions affecting the excavation, adjacent structures, and water wells.

I. Provide environmental monitoring wells installed at the proper locations and depths as required to provide adequate observations of hydrostatic conditions and possible contaminant transport from contamination sources into the work area or into the ground water control system.

J. Decommission piezometers and monitoring wells installed during design phase studies and left for Contractors monitoring and use.

1.06 SUBMITTALS

A. Submittals shall conform to requirements of Section 01330 - Submittals.

B. Submit a Ground Water and Surface Water Control Plan for review by the Engineer prior to start of any field work. The Plan shall be signed by a Professional Engineer registered in the State of Texas. Submit a plan to include the following:

1. Results of subsurface investigation and description of the extent and characteristics of water bearing layers subject to ground water control.

2. Names of equipment suppliers and installation subcontractors.

3. A description of proposed ground water control systems indicating arrangement, location, depth and capacities of system components, installation details and criteria, and operation and maintenance procedures.

4. A description of proposed monitoring and control system indicating depths and locations of piezometers and monitoring wells, monitoring installation details and criteria, type of equipment and instrumentation with pertinent data and characteristics.

5. A description of proposed filters including types, sizes, capacities and manufacturer's application recommendations.

6. Design calculations demonstrating adequacy of proposed systems for intended applications. Define potential area of influence of ground water control operation near contaminated areas.

7. Operating requirements, including piezometric control elevations for dewatering and depressurization.

8. Excavation drainage methods including typical drainage layers, sump pump application and other necessary means.

9. Surface water control and drainage installations.

10. Proposed methods and locations for disposing of removed water.

C. Submit the following records upon completed initial installation:

1. Installation and development reports for well points, eductors, and deep wells.

2. Installation reports and baseline readings for piezometers and monitoring wells.

3. Baseline analytical test data of water from monitoring wells.

4. Initial flow rates.

D. Submit the following records on a weekly basis during operations:

1. Records of flow rates and piezometric elevations obtained during monitoring of dewatering and depressurization. Refer to Paragraph 3.02, Requirements for Eductor, Well Points, or Deep Wells.

2. Maintenance records for ground water control installations, piezometers, and monitoring wells.

E. Submit the following records at end of work. Decommissioning (abandonment) reports for monitoring wells and piezometers installed by other during the design phase and left for Contractor's monitoring and use.

1.07 ENVIRONMENTAL REQUIREMENTS

A. Comply with requirements of agencies having jurisdiction.

B. Comply with Texas Commission on Environmental Quality regulations and Texas Water Well Drillers Association for development, drilling, and abandonment of wells used in dewatering system.

C. Obtain all necessary permits from agencies with control over the use of groundwater and matters affecting well installation, water discharge, and use of existing storm drains and natural water sources. Because the review and permitting process may be lengthy, take early action to pursue and submit for the required approvals.

D. Monitor ground water discharge for contamination while performing pumping in the vicinity of potentially contaminated sites.

PART 2 P R O D U C T S

2.01 EQUIPMENT AND MATERIALS

A. Equipment and materials are at the option of Contractor as necessary to achieve desired results for dewatering. Selected equipment and materials are subject to review of the Engineer through submittals required in Paragraph 1.06, Submittals.

B. Eductors, well points, or deep wells, where used, must be furnished, installed and operated by an experienced contractor regularly engaged in ground water control system design, installation, and operation.

C. All equipment must be in good repair and operating order.

D. Sufficient standby equipment and materials shall be kept available to ensure continuous operation, where required.

PART 3 E X E C U T I O N

3.01 GROUND WATER CONTROL

A. Perform a subsurface investigation by borings as necessary to identify water bearing layers, piezometric pressures, and soil parameters for design and installation of ground water control systems. Perform pump tests, if necessary to determine the drawdown characteristics of the waterbearing layers. The results shall be presented in the Ground Water and Surface Water Control Plan (See Paragraph 1.06B.1).

B. Provide labor, material, equipment, techniques and methods to lower, control and handle ground water in a manner compatible with construction methods and site conditions. Monitor effectiveness of the installed system and its effect on adjacent property.

C. Install, operate, and maintain ground water control systems in accordance with the Ground Water and Surface Water Control Plan. Notify the Engineer in writing of any changes made to accommodate field conditions and changes to the Work. Provide revised drawings and calculations with such notification.

D. Provide for continuous system operation, including nights, weekends, and holidays. Arrange for appropriate backup if electrical power is primary energy source for dewatering system.

E. Monitor operations to verify that the system lowers ground water piezometric levels at a rate required to maintain a dry excavation resulting in a stable subgrade for prosecution of subsequent operations.

F. Where hydrostatic pressures in confined water bearing layers exist below excavation, depressurize those zones to eliminate risk of uplift or other instability of excavation or installed works. Allowable piezometric elevations shall be defined in the Ground Water and Surface Water Control Plan.

G. Remove ground water control installations.

1. Remove pumping system components and piping when ground water control is no longer required.

2. Remove piezometers, including piezometers installed during the design phase investigations and left for Contractor's use, upon completion of testing, in accordance with Section 02533 - Acceptance Testing of Sanitary Sewers.

3. Remove monitoring wells when directed by the Engineer.

4. Grout abandoned well and piezometer holes. Fill piping that is not removed with cement-bentonite grout or cement-sand grout.

G. During backfilling, dewatering may be reduced to maintain water level a minimum of 5 feet below prevailing level of backfill. However, do not allow that water level to result in uplift pressures in excess of 80 percent of downward pressure produced by weight of structure or backfill in place. Do not allow water levels to rise into cement stabilized sand until at least 48 hour after placement.

H. Provide a uniform diameter for each pipe drain run constructed for dewatering. Remove pipe drain when it has served its purpose. If removal of pipe is impractical, provide grout connections at 50-foot intervals and fill pipe with cement-bentonite grout or cement-sand grout when pipe is removed from service.

I. Extent of construction ground water control for structures with a permanent perforated underground drainage system may be reduced, such as for units designed to withstand hydrostatic uplift pressure. Provide a means of draining the affected portion of underground system, including standby equipment. Maintain drainage system during operations and remove it when no longer required.

J. Remove system upon completion of construction or when dewatering and control of surface or ground water is no longer required.

K. Compact backfill to not less than 95 percent of the maximum dry density in accordance with ASTM D 698.

3.02 REQUIREMENTS FOR EDUCTOR, WELL POINTS, OR DEEP WELLS

A. For aboveground piping in ground water control system, include a 12-inch minimum length of clear, transparent piping between every eductor well or well point and discharge header so that discharge from each installation can be visually monitored.

B. Install sufficient piezometers or monitoring wells to show that all trench or shaft excavations in water bearing materials are predrained prior to excavation. Provide separate piezometers for monitoring of dewatering and for monitoring of depressurization. Install piezometers and monitoring wells for tunneling as appropriate for Contractor's selected method of work.

C. Install piezometers or monitoring wells not less than one week in advance of beginning the associated excavation.

D. Dewatering may be omitted for portions of underdrains or other excavations, but only where auger borings and piezometers or monitoring wells show that soil is predrained by an existing system such that the criteria of the ground water control plan are satisfied.

E. Replace installations that produce noticeable amounts of sediments after development.

F. Provide additional ground water control installations, or change the methods, in the event that the installations according to the ground water control plan does not provide satisfactory results based on the performance criteria defined by the plan and by the specification. Submit a revised plan according to Paragraph 1.06B.

3.03 EXCAVATION DRAINAGE

A. Contractor may use excavation drainage methods if necessary to achieve well drained conditions. The excavation drainage may consist of a layer of crushed stone and filter fabric, and sump pumping in combination with sufficient wells for ground water control to maintain stable excavation and backfill conditions.

3.04 MAINTENANCE AND OBSERVATION

A. Conduct daily maintenance and observation of piezometers or monitoring wells while the ground water control installations or excavation drainage is operating in an area or seepage into tunnel is occurring. Keep system in good condition.

B. Replace damaged and destroyed piezometers or monitoring wells with new piezometers or wells as necessary to meet observation schedule.

C. Cut off piezometers or monitoring wells in excavation areas where piping is exposed, only as necessary to perform observation as excavation proceeds. Continue to maintain and make observations, as specified.

D. Remove and grout piezometers inside or outside the excavation area when ground water control operations are complete. Remove and grout monitoring wells when directed by the Engineer.

3.05 MONITORING AND RECORDING

A. Monitor and record average flow rate of operation for each deep well, or for each wellpoint or eductor header used in dewatering system. Also monitor and record water level and ground water recovery. These records shall be obtained daily until steady conditions are achieved and twice weekly thereafter.

B. Observe and record elevation of water level daily as long as ground water control system is in operation, and weekly thereafter until the Work is completed or piezometers or wells are removed, except when the Engineer determines that more frequent monitoring and recording are required. Comply with the Engineer's direction for increased monitoring and recording and take measures as necessary to ensure effective dewatering for intended purpose.

3.06 SURFACE WATER CONTROL

A. Intercept surface water and divert it away from excavations through use of dikes, ditches, curb walls, pipes, sumps or other approved means. The requirement includes temporary works required to protect adjoining properties from surface drainage caused by construction operations.

B. Divert surface water and seepage water into sumps and pump it into drainage channels or storm drains, when approved by agencies having jurisdiction. Provide settling basins when required by such agencies.

END OF SECTION

Section 01731

CUTTING AND PATCHING

PART 1 G E N E R A L

1.01 SECTION INCLUDES

A. Cutting, patching and fitting of the Work or Work under construction and to existing facilities and to accommodate the coordination installation or connection of Work with existing facilities, or to uncover work for access, inspection or testing and related submittals. Demolition is specified elsewhere.

1.02 CUTTING AND PATCHING

A. Perform activities to avoid interference with facility operations and the Work of others in accordance with the General Conditions of the Contract.

B. Execute cutting and patching, including excavation, backfill and fitting to:

1. Remove and replace defective Work or Work not conforming to the Drawings and Specifications.

2. Take samples of installed Work as required for testing.

3. Remove construction required to provide for specified alteration or addition to existing work.

4. Uncover Work to provide for inspection or reinspection of covered Work by the Engineer or regulatory agencies having jurisdiction.

5. Connect any Work that was not accomplished in the proper sequence to completed Work.

6. Remove or relocate existing utilities and pipes which obstruct Work to which connections must be made.

7. Make connections or alterations to existing or new facilities.

8. Provide openings, channels, chases and flues, if any, and do cutting, patching and finishing.

C. Restore existing work to a state equal to or better than that prior to cutting and patching. Restore new Work to standards of these Specifications.

D. Support, anchor, attach, match, trim and seal materials to the Work of others. Unless otherwise specified, furnish and install sleeves, inserts, hangers, required for the execution of the Work.

E. Provide shoring, bracing and support as required to maintain structural integrity and protect adjacent Work from damage during cutting and patching. Before cutting beams or other structural members, anchors, lintels or other supports, request written instructions from the Engineer. Follow such instructions, as applicable.

1.03 SUBMITTALS

A. Submit written notice to the Engineer requesting consent to proceed prior to cutting which may affect structural integrity or design function, operations, or work of another contractor.

B. Include the following in submittal:

1. Identification of project.
2. Description of affected Work.
3. Necessity for cutting.
4. Effect on other work and on structural integrity.
5. Include description of proposed Work:
   a. Scope of cutting and patching.
   b. Contractor, subcontractor or trade to execute Work.
   c. Products proposed to be used.
   d. Extent of refinishing.
   e. Schedule of operations.
6. Alternatives to cutting and patching, if any.

C. Should conditions of Work or schedule indicate change of materials or methods, submit a written recommendation to the Engineer including:

1. Conditions indicating change.
2. Recommendations for alternative materials or methods.
3. Submittals as required for substitutions.

D. Submit written notice to the Engineer designating time Work will be uncovered for observation. Do not begin cutting or patching operations until authorized by the Engineer.

1.04 CONNECTIONS TO EXISTING FACILITIES

A. Perform construction necessary to complete connections and tie-ins to existing facilities. Keep all existing facilities in continuous operation unless otherwise specifically permitted in these Specifications or approved by the Engineer.

B. Coordinated with the Engineer, interruption of service requiring connection into existing facilities. Bypassing of wastewater or sludge to waterways is not permitted. Provide temporary pumping facilities to handle wastewater if necessary. Use temporary bulkheads (e.g., inflatable plugs) to minimize disruption. Provide temporary power supply and piping to facilitate construction where necessary.

C. Submit a detailed schedule of proposed connections, including shut-downs and tie-ins. Include in the submittal the proposed time and date as well as the anticipated duration of the Work. Submit the detailed schedule coordinated with the construction schedule.

1. Provide specific time and date information to the Engineer 48 hours in advance of proposed Work.

D. Procedures and Operations:

1. The Contractor shall operate existing pumps, valves and gates required for sequencing procedures under the supervision of the Engineer. Do not operate any valve, gate or other item of equipment without the knowledge of the Engineer.

2. Insofar as possible, equipment shall be tested and in operating condition before final tie-ins are made to connect equipment to the existing facility.

3. Carefully coordinate Work and schedules. Provide written notice to the Engineer at least 48 hours before shutdowns or bypasses are required.

PART 2 P R O D U C T S - Not Used

PART 3 E X E C U T I O N - Not Used

END OF SECTION

Section 01770

CLOSEOUT PROCEDURES

PART 1 G E N E R A L

1.01 SECTION INCLUDES

A. Closeout procedures including final submittals such as operation and maintenance data, warranties, and spare parts and maintenance materials.

1.02 CLOSEOUT PROCEDURES

A. Comply with Section GC - General Conditions regarding Final Completion and Final Payment when Work is complete and ready for the Engineer's final inspection.

B. Provide Project Record Documents in accordance with Section 01785.

C. Complete or correct items on punch list, with no new items added. Any new items will be addressed during warranty period.

1.03 FINAL CLEANING

A. Execute final cleaning prior to final inspection.

B. For facilities, clean interior and exterior glass and surfaces exposed to view; remove temporary labels, stains and foreign substances, polish transparent and glossy surfaces, vacuum carpeted and soft surfaces.

C. Clean equipment and fixtures to a sanitary condition.

D. Clean debris from drainage systems.

E. Clean site; sweep paved areas, rake clean landscaped surfaces.

F. Remove waste and surplus materials, rubbish, and temporary construction facilities from the site following the final test of utilities and completion of the work.

1.04 WARRANTIES

A. Provide one original of each warranty from Subcontractors, suppliers, and manufacturers.

B. Submit warranties prior to final Application for Payment.

C. Warranties shall commence in accordance with the requirements in Section GC - General Conditions, paragraph 14.04, Substantial Completion.

PART 2 P R O D U C T S - Not Used

PART 3 E X E C U T I O N - Not Used

END OF SECTION

Section 01785

PROJECT RECORD DOCUMENTS

PART 1 G E N E R A L

1.01 SECTION INCLUDES

A. Maintenance and Submittal of Record Documents.

1.02 MAINTENANCE OF DOCUMENTS

A. Maintain one record copy of documents at the site in accordance with Section GC - General Conditions, paragraph 6.12, Record Documents.

B. Store Record Documents in field office if a field office is required by Contract Documents, or in a secure location. Provide files, racks, and secure storage for Record Documents and samples.

C. Label each document "PROJECT RECORD" in neat, large, printed letters.

D. Maintain Record Documents in a clean, dry, and legible condition. Do not use Record Documents for construction purposes.

E. Keep Record Documents available for inspection by Engineer.

1.03 RECORDING

A. Record information concurrently with evaluation progress. Do not abandon work site until required information is recorded.

B. Drawings: Legibly record all actual work, or "as built" conditions observed in the field on the district overall plan provided by the Engineer when a discrepancy is noted.

1.04 SUBMITTALS

A. At contract closeout, deliver Project Record Documents to the Engineer.

PART 2 P R O D U C T S - Not Used

PART 3 E X E C U T I O N - Not Used

END OF SECTION

Section 02084

FRAMES, GRATES, RINGS, AND COVERS

PART 1 G E N E R A L

1.01 SECTION INCLUDES

A. Iron castings for manhole frames and covers, inlet frames and grates, catch basin frames and grates, meter vault frames and covers, adjustment rings, and extensions.

B. Ring grates.

C. Trench Drainage

D. Tree Grates

1.02 MEASUREMENT AND PAYMENT

A. Unit Prices.

1. No payment will be made for frames, grates, rings, covers, and seals under this Section. Include payment in unit price for related item.

2. Payment to rack over existing manhole is on a unit price basis for each manhole.

3. Refer to Section 01270 - Measurement and Payment for unit price procedures

B. Stipulated Price (Lump Sum). If Contract is Stipulated Price Contract, payment for Work in this Section is included in total Stipulated Price.

1.03 REFERENCES

A. AASHTO - American Association of State Highway and Transportation Officials

1. Standard Specification for Highway Bridges

2. M306: Drainage, Sewer, Utility, and Related Castings

3. M105: Gray Iron Castings

B. ASTM A 48 - Standard Specification for Gray Iron Castings

C. ASTM A 615 - Standard Specification for Deformed and Plain Billet-Steel Bars for Concrete Reinforcement

D. AWS - D 12.1 Welding Reinforcing Steel.

E.

1.04 SUBMITTALS

A. Conform to requirements of Section 01330 - Submittal Procedures.

B. Submit copies of manufacturer's specifications, load tables, dimension diagrams, anchor details, and installation instructions.

C. Submit shop drawings for fabrication and installation of casting assemblies that are not included in Drawings or standard City details. Include plans, elevations, sections and connection details. Show anchorage and accessory items. Include setting drawings for location and installation of castings and anchorage devices.

PART 2 P R O D U C T S

2.01 CASTINGS

A. All castings shall be made from gray cast iron conforming to the requirements of AASHTO M105 class 35b.

B. Castings intended for traffic service shall be clean castings capable of withstanding an application of 40,000 pound proof load as described in Section 5 of AASHTO M306 (includes items such as frames, grates, rings, covers, trench drainage, etc.)

C. Fabricate castings to conform to shapes, dimensions, and with wording or logos shown on Drawings.

D. All castings shall be manufactured in accordance with the requirement of Section 4 of AASHTO M306.

E. Unless otherwise indicated, all castings shall be provided uncoated.

F. Each individual casting shall include all markings as shown on the specification drawings and shall be identified by the producing foundry showing the following: Name of producing foundry; country of manufacturer preceded by the words “Made in,” such as “Made in USA”; material designation, heat identification and cast date (MM/DD/YY), casting lettering as required by the purchaser. If a casting is melted and poured at one foundry and labeled with the name of another organization, manufacturer, or foundry the casting shall include the name of the producing foundry and the organization the casting is produced for. The name of the producing foundry and the organization the product is made for shall have lettering of equal size, be in close proximity to each other, and be easily identified from the same side of the casting. The casting shall also include any additional markings as required in Section 9 of AASHTO M306 and Section 17 of AASHTO M105.

2.02 TESTING REQUIREMENTS

A. Testing shall be performed in accordance with the following inspection criteria unless otherwise specified in the contract or purchase order. The manufacturer/supplier shall

be responsible for carrying out all of the required tests and inspections. All testing shall be conducted in the United States using purchaser approved reliable facilities. The manufacturer/supplier shall maintain complete records of all such tests and inspections. All testing shall be paid for by the manufacturer/supplier. If the producing foundry is located within the United States and operates in accordance with an approved Quality System they shall conduct testing in accordance with Subsection B. All others shall conduct testing in accordance with subsection C.

B. The manufacturer shall report and certify material information obtained from separately cast test bars. If there are more than three test bar failures in a calendar year the manufacturer shall report this to the purchaser and shall discontinue supplying product. In order to resume supplying product, documentation that a new Quality System is in place to ensure material compliance must be submitted to and accepted by the purchaser. The manufacturer may also supply under subsection C.

C. A test bar for determining the class of iron shall be cast on each casting in a place where it can be easily broken off with a breakage pattern remaining on the member. Test bars shall be of sufficient size in order to produce a machined test specimen complying with the dimension requirement for a Type B test bar as shown in AASHTO M105. For lots of 15 castings or less 30% of test bars shall be tested. For lot sizes between 16 to 100, 10% or a minimum of 5 test bars shall be tested. For lots greater than 100, 10% of all bars shall be tested. All castings for testing shall be selected at random. All castings that have a test bar removed shall also be inspected for dimensional and mass requirements. If any casting fails the material, dimension, or mass inspection that casting will be rejected and destroyed. In order for the remaining castings in the lot to be accepted, all castings in the lot shall be tested and need to meet the material, dimensional, and mass requirements. If any additional casting fails, the entire lot shall be rejected and destroyed. If the purchaser elects to select a casting for verification of test results, the member shall be furnished by the supplier at no cost to the purchaser.

2.03 SPECIAL FRAMES AND COVERS

A. Where indicated on Drawings, provide watertight manhole frames and covers with minimum of four bolts and gasket designed to seal cover to frame. Supply approved watertight manhole covers and frames.

B. Where shown on Drawing, provide manhole frames and covers with 48 inch diameter clear opening, with inner cover for 22 inch diameter clear opening. Provide approved inner cover with pattern shown on Drawings.

2.04 FABRICATED RING GRATES

A. Fabricate ring grates from reinforcing steel conforming to ASTM A 615.

B. Conform to welds connecting bars to AWS D 12.1.

2.05 ADJUSTMENT RINGS FOR ASPHALT OVERLAYS

A. Use castings conforming Section 2.01.

B. One piece casting with dimensions to fit frame and cover.

PART 3 E X E C U T I O N

3.01 INSTALLATION

A. Install castings according to approved shop drawings, instructions in related specifications, and applicable directions from manufacturer's printed materials.

B. Set castings accurately at required locations to proper alignment and elevation. Keep castings plumb, level, true, and free of rack. Measure location accurately from established lines and grades. Brace or anchor frames temporarily in form work until permanently set.

C. Fabricate ring grates in accordance with City standard detail, “Ring Grate for Open End of 18 Inch to 72 Inch Stubs to Ditch”. Set in mortar in mouth of pipe bell.

D. Install adjustment rings in existing frames with clean bearing surfaces that are free from rocking.

END OF SECTION

Section 02221

REMOVING EXISTING PAVEMENTS, STRUCTURES, WOOD, AND DEMOLITION DEBRIS

PART 1 G E N E R A L

1.01 SECTION INCLUDES

A. Removing concrete paving, asphaltic concrete pavement, brick pavement and base courses.

B. Removing concrete curbs, concrete curbs and gutters, sidewalks and driveways.

C. Removing pipe culverts, sewers, and sewer leads.

D. Removing waterlines and water services lines including asbestos cement pipe per OSHA guidelines.

E. Removing existing inlets and manholes.

F. Removing and disposing of pre-stressed concrete beams and drill shafts.

G. Removing miscellaneous structures of concrete or masonry.

H. Removing existing bridge.

I. Removing existing wood and demolition debris.

1.02 MEASUREMENT AND PAYMENT

A. Unit Prices.

1. Payment for removing and disposing of asphaltic surfacing with or without base, regardless of thickness encountered, is on square yard basis measured between lips of gutters.

2. Payment for removing and disposing of reinforced concrete pavement, with or without asphalt overlay, regardless of its thickness, is on square yard basis measured from back-to-back of curbs. Payment includes concrete pavement, esplanade curbs, curbs and gutters, and paving headers.

3. Payment for removing and disposing of cement stabilized shell base course, with or without asphaltic surfacing, is on square yard basis.

4. Payment for removing and disposing of concrete sidewalks and driveways is on square yard basis.

5. Payment for removing asphaltic pavement surface by milling shall be in accordance with Section 2960.

6. Payment for removing and disposing of miscellaneous concrete and masonry is on cubic yard basis of structure in place.

7. Payment for removing and disposing of pipe culverts, sewers, and sewer leads, is on linear foot basis for each diameter and each material type of pipe removed.

8. Payment for removing and disposing of waterlines and water service lines including asbestos cement pipe is on linear foot basis for each diameter pipe and each material type of pipe removed.

9. Payment for removing and disposing of existing inlets is on unit price basis for each inlet removed.

10. Payment for removing and disposing of prestressed concrete piles and drill shafts is on linear foot basis.

11. Payment for removing and disposing of existing bridge, including piles and abutments to minimum of 4 feet below ground level, is on a lump sum basis.

12. Payment for removing and disposing of existing manholes is on unit price basis for each manhole removed.

13. Payment for removing and disposing of miscellaneous wood and demolition debris is on cubic yard basis.

14. No payment for saw cutting of pavement, curbs, or curbs and gutters will be made under this section. Include cost of such work in unit prices for items listed in bid form requiring saw cutting.

15. No payment will be made for work outside maximum payment limits indicated on Drawings, or for pavements or structures removed for Contractor's convenience.

    a. For utility installations: Match actual pavement replaced but no greater than maximum pavement replacement limits shown on Drawings. Limits of measurement will be as shown on Street Cut Pavement Replacement Rules.

16. Refer to Section 01270 - Measurement and Payment for unit price procedures

B. Stipulated Price (Lump Sum). If Contract is Stipulated Price Contract, payment for work in this Section is included in total Stipulated Price.

1.03 REGULATORY REQUIREMENTS

A. Conform to applicable codes for disposal of debris.

B. Coordinate removal work with utility companies.

PART 2 P R O D U C T S - Not Used

PART 3 E X E C U T I O N

3.01 PREPARATION

A. Obtain advance approval from Project Manager for dimensions and limits of removal work.

B. Identify known utilities below grade. Stake and flag locations.

3.02 PROTECTION

A. Protect following from damage or displacement:

1. Adjacent public and private property.

2. Trees, plants, and other landscape features designated to remain.

3. Utilities designated to remain.

4. Pavement and utility structures designated to remain.

5. Bench marks, monuments, and existing structures designated to remain.

3.03 REMOVALS

A. Remove pavements and structures by methods that will not damage underground utilities. Do not use drop hammer near existing underground utilities.

B. Minimize amount of earth loaded during removal operations.

C. Where existing pavement is to remain, make straight saw cuts in existing pavement to provide clean breaks prior to removal. Do not break concrete pavement or base with drop hammer unless concrete or base has been saw cut to minimum depth of 2 inches.

D. When street and driveway saw cut location is greater than one-half of pavement lane width, remove pavement for full lane width or to nearest longitudinal joint as directed by Project Manager.

E. Remove sidewalks and curbs to nearest existing dummy, expansion, or construction joint.

F. Where existing end of pipe culvert or end of sewer is to remain, install 8-inch-thick

masonry plug in pipe end prior to backfill in accordance with requirements of Section 02316 - Excavation and Backfill for Structures.

3.04 BACKFILL

A. Backfill of removal areas shall be in accordance with requirements of Section 02316 - Excavation and Backfill for Structures.

3.05 DISPOSAL

A. Inlet frames, grates, and plates; and manhole frames and covers, may remain City property. Disposal shall be in accordance with requirements of Section 01576 - Waste Material Disposal.

B. Remove from site, debris resulting from work under this section in accordance with requirements of Section 01576 - Waste Material Disposal.

END OF SECTION

Section 02317

EXCAVATION AND BACKFILL FOR UTILITIES

PART 1 G E N E R A L

1.01 SECTION INCLUDES

A. Excavation, trenching, foundation, embedment, and backfill for installation of utilities, including manholes and other pipeline structures.

1.02 MEASUREMENT AND PAYMENT

A. Unit Prices.

1. No additional payment will be made for trench excavation, embedment and backfill under this Section. Include cost in the unit price for installed underground piping, sewer, conduit, or duct work.

2. No separate or additional payment will be made for surface water control, ground water control, or for excavation drainage. Include in the unit price for the installed piping, sewer, conduit, or duct work.

3. Refer to Section 01270 - Measurement and Payment for unit price procedures.

B. Stipulated Price (Lump Sum). If the Contract is a Stipulated Price Contract, payment for work in this Section is included in the total Stipulated Price.

1.03 DEFINITIONS

A. Pipe Foundation: Suitable and stable native soils that are exposed at the trench subgrade after excavation to depth of bottom of the bedding as shown on the Drawings, or foundation backfill material placed and compacted in over-excavations.

B. Pipe Bedding: The portion of trench backfill that extends vertically from top of foundation up to a level line at bottom of pipe, and horizontally from one trench sidewall to opposite sidewall.

C. Haunching: The material placed on either side of pipe from top of bedding up to springline of pipe and horizontally from one trench sidewall to opposite sidewall.

D. Initial Backfill: The portion of trench backfill that extends vertically from springline of pipe (top of haunching) up to a level line 12 inches above top of pipe, and horizontally from one trench sidewall to opposite sidewall.

E. Pipe Embedment: The portion of trench backfill that consists of bedding, haunching and initial backfill.

F. Trench Zone: The portion of trench backfill that extends vertically from top of pipe embedment up to pavement subgrade or up to final grade when not beneath pavement.

G. Unsuitable Material: Unsuitable soil materials are the following:

1. Materials that are classified as ML, CL-ML, MH, PT, OH, and OL according to ASTM D 2487.

2. Materials that cannot be compacted to required density due to either gradation, plasticity, or moisture content.

3. Materials that contain large clods, aggregates, stones greater than 4 inches in any dimension, debris, vegetation, waste or any other deleterious materials.

4. Materials that are contaminated with hydrocarbons or other chemical contaminants.

H. Suitable Material: Suitable soil materials are those meeting specification requirements. Unsuitable soils meeting specification requirements for suitable soils after treatment with lime or cement are considered suitable, unless otherwise indicated.

I. Backfill: Suitable material meeting specified quality requirements, placed and compacted under controlled conditions.

J. Ground Water Control Systems: Installations external to trench, such as well points, eductors, or deep wells. Ground water control includes dewatering to lower ground water, intercepting seepage which would otherwise emerge from side or bottom of trench excavation, and depressurization to prevent failure or heaving of excavation bottom. Refer to Section 01578 - Control of Ground Water and Surface Water.

K. Surface Water Control: Diversion and drainage of surface water runoff and rain water away from trench excavation. Rain water and surface water accidentally entering trench shall be controlled and removed as a part of excavation drainage.

L. Excavation Drainage: Removal of surface and seepage water in trench by sump pumping and using a drainage layer, as defined in ASTM D 2321, placed on the foundation beneath pipe bedding or thickened bedding layer of Class I material.

M. Trench Conditions are defined with regard to the stability of trench bottom and trench walls of pipe embedment zone. Maintain trench conditions that provide for effective placement and compaction of embedment material directly on or against undisturbed soils or foundation backfill, except where structural trench support is necessary.

1. Dry Stable Trench: Stable and substantially dry trench conditions exist in pipe embedment zone as a result of typically dry soils or achieved by ground water control (dewatering or depressurization) for trenches extending below ground water level.

2. Stable Trench with Seepage: Stable trench in which ground water seepage is controlled by excavation drainage.

   a. Stable Trench with Seepage in Clayey Soils: Excavation drainage is provided in lieu of or to supplement ground water control systems to control seepage and provide stable trench subgrade in predominately clayey soils prior to bedding placement.

   b. Stable Wet Trench in Sandy Soils: Excavation drainage is provided in the embedment zone in combination with ground water control in predominately sandy or silty soils.

3. Unstable Trench: Unstable trench conditions exist in the pipe embedment zone if ground water inflow or high water content causes soil disturbances, such as sloughing, sliding, boiling, heaving or loss of density.

N. Subtrench: Subtrench is a special case of benched excavation. Subtrench excavation below trench shields or shoring installations may be used to allow placement and compaction of foundation or embedment materials directly against undisturbed soils. Depth of a subtrench depends upon trench stability and safety as determined by the Contractor.

O. Trench Dam: A placement of low permeability material in pipe embedment zone or foundation to prohibit ground water flow along the trench.

P. Over-Excavation and Backfill: Excavation of subgrade soils with unsatisfactory bearing capacity or composed of otherwise unsuitable materials below top of foundation as shown on Drawings, and backfilled with foundation backfill material.

Q. Foundation Backfill Materials: Natural soil or manufactured aggregate of controlled gradation, and geotextile filter fabrics as required, to control drainage and material separation. Foundation backfill material is placed and compacted as backfill to provide stable support for bedding. Foundation backfill materials may include concrete seal slabs.

R. Trench Safety Systems include both protective systems and shoring systems as defined in Section 01561 - Trench Safety Systems.

S. Trench Shield (Trench Box): A portable worker safety structure moved along the trench as work proceeds, used as a protective system and designed to withstand forces imposed on it by cave-in, thereby protecting persons within the trench. Trench shields may be stacked if so designed or placed in a series depending on depth and length of excavation to be protected.

T. Shoring System: A structure that supports sides of an excavation to maintain stable soil conditions and prevent cave-ins, or to prevent movement of the ground affecting adjacent installations or improvements.

U. Special Shoring: A shoring system meeting special shoring as specified in Paragraph 1.08, Special Shoring Design Requirements, for locations identified on the Drawings.

1.04 REFERENCES

A. ASTM C 12 - Standard Practice for Installing Vitrified Clay Pipe Lines.

B. ASTM D 558 - Test Methods for Moisture-Density Relations of Soil Cement Mixtures.

C. ASTM D 698 - Test Methods for Moisture-Density Relations of Soils and Soil-Aggregate Mixtures Using 5.5-lb (2.49-kg) Rammer and 12-in. (304.8-mm) Drop.

D. ASTM D 1556 - Test Method for Density in Place by the Sand-Cone Method.

E. ASTM D 2321 - Standard Practice for Underground Installation of Thermoplastic Pipe for Sewers and Other Gravity Flow Applications.

F. ASTM D 2487 - Classification of Soils for Engineering Purposes.

G. ASTM D 2922 - Test Method for Density of Soil and Soil-Aggregate in Place by Nuclear Methods (Shallow Depth).

H. ASTM D 3017 - Test Method for Water Content of Soil and Rock in Place by Nuclear Methods (Shallow Depth).

I. ASTM D 4318 - Test Method for Liquid Limit, Plastic Limit, and Plasticity Index of Soils.

J. TxDOT Tex-101-E - Preparation of Soil and Flexible Base Materials for Testing.

K. TxDOT Tex-110-E - Determination of Particle Size Analysis of Soils.

L. Federal Regulations, 29 CFR Part 1926, Standards-Excavation, Occupational Safety and Health Administration (OSHA).

1.05 SCHEDULING

A. Schedule work so that pipe embedment can be completed on the same day that acceptable foundation has been achieved for each section of pipe installation, manhole, or other structures.

1.06 SUBMITTALS

A. Conform to Section 01330 - Submittal Procedures.

B. Submit a written description for information only of the planned typical method of excavation, backfill placement and compaction, including:

1. Sequence of work and coordination of activities.

2. Selected trench widths.

3. Procedures for foundation and embedment placement, and compaction.

4. Procedure for use of trench boxes and other premanufactured systems while assuring specified compaction against undisturbed soil.

5. Procedure for installation of Special Shoring at locations identified on the Drawings.

C. Submit a ground and surface water control plan in accordance with requirements in this Section and Section 01578 - Control of Ground Water and Surface Water.

D. Submit backfill material sources and product quality information in accordance with requirements of Section 02320 - Utility Backfill Materials.

E. Submit a trench excavation safety program in accordance with requirements of Section 01561 - Trench Safety System. Include designs for special shoring meeting the requirements defined in Paragraph 1.08, Special Shoring Design Requirements.

F. Submit record of location of utilities as installed, referenced to survey control points. Include locations of utilities encountered or rerouted. Give stations, horizontal dimensions, elevations, inverts, and gradients.

1.07 TESTS

A. Testing and analysis of backfill materials for soil classification and compaction during construction will be performed by an independent laboratory provided by the City in accordance with requirements of Section 01454 - Testing Laboratory Services and as specified in this Section.

B. Perform backfill material source qualification testing in accordance with requirements of Section 02320- Utility Backfill Materials.

1.08 SPECIAL SHORING DESIGN REQUIREMENTS

A. Have special shoring designed or selected by the Contractor's Professional Engineer to provide support for the sides of the excavations, including soils and hydrostatic ground water pressures as applicable, and to prevent ground movements affecting adjacent installations or improvements such as structures, pavements and utilities. Special shoring may be a premanufactured system selected by the Contractor’s Professional Engineer to meet the project site requirements based on the manufacturer’s standard design.

PART 2 P R O D U C T S

2.01 EQUIPMENT

A. Perform excavation with hydraulic excavator or other equipment suitable for achieving the requirements of this Section.

B. Use only hand-operated tamping equipment until a minimum cover of 12 inches is obtained over pipes, conduits, and ducts. Do not use heavy compacting equipment until adequate cover is attained to prevent damage to pipes, conduits, or ducts.

C. Use trench shields or other protective systems or shoring systems which are designed and operated to achieve placement and compaction of backfill directly against undisturbed native soil.

D. Use special shoring systems where required which may consist of braced sheeting, braced soldier piles and lagging, slide rail systems, or other systems meeting requirements as specified in Paragraph 1.09, Shoring Design Requirements.

2.02 MATERIAL CLASSIFICATIONS

A. Embedment and Trench Zone Backfill Materials: Conform to classifications and product descriptions of Section 02320 - Utility Backfill Materials.

B. Concrete Backfill: Conform to requirements for Class B concrete as specified in Section 03315 - Concrete for Utility Construction.

C. Concrete for Trench Dams: Concrete backfill or 3 sack premixed (bag) concrete.

D. Timber Shoring Left in Place: Untreated oak.

PART 3 E X E C U T I O N

3.01 STANDARD PRACTICE

A. Install flexible pipe, including "semi-rigid" pipe, to conform to standard practice described in ASTM D 2321, and as described in this Section. Where an apparent conflict occurs between the standard practice and the requirements of this Section, this Section governs.

B. Install rigid pipe to conform to standard practice described in ASTM C 12, and as described in this Section. Where an apparent conflict occurs between the standard practice and the requirements of this Section, this Section governs.

3.02 PREPARATION

A. Establish traffic control to conform to requirements of Section 01555 - Traffic Control and Regulation. Maintain barricades and warning lights for streets and intersections affected by the Work and are considered hazardous to traffic movements.

B. Perform work to conform to applicable safety standards and regulations. Employ a trench safety system as specified in Section 01561 - Trench Safety Systems.

C. Immediately notify the agency or company owning any existing utility line which is damaged, broken, or disturbed. Obtain approval from the City Engineer and agency for any repairs or relocations, either temporary or permanent.

D. Install and operate necessary dewatering and surface water control measures to conform to Section 01578 - Control of Ground Water and Surface Water.

E. Maintain permanent benchmarks, monumentation, and other reference points.

3.03 PROTECTION

A. Protect trees, shrubs, lawns, existing structures, and other permanent objects outside of grading limits and within the grading limits as designated on the Drawings, and in accordance with requirements of Section 01562 - Tree and Plant Protection.

B. Protect and support above-grade and below-grade utilities which are to remain.

C. Restore damaged permanent facilities to pre-construction conditions unless replacement or abandonment of facilities is indicated on the Drawings.

D. Take measures to minimize erosion of trenches. Do not allow water to pond in trenches. Where slides, washouts, settlements, or areas with loss of density or pavement failures or potholes occur, repair, recompact, and pave those areas at no additional cost to City.

3.04 EXCAVATION

A. Except as otherwise specified or shown on the Drawings, install underground utilities in open cut trenches with vertical sides.

B. Perform excavation work so that pipe, conduit, and ducts can be installed to depths and alignments shown on the Drawings. Avoid disturbing surrounding ground and existing facilities and improvements.

C. Determine trench excavation widths using the following schedule as related to pipe outside diameter (O.D.). Maximum trench width shall be the minimum trench width plus 24 inches.

Nominal Pipe Size, Inches	Minimum Trench Width, Inches

Less than 18	O.D. + 18
18 to 30	O.D. + 24
Greater than 30	O.D. + 36

D. Use sufficient trench width or benches above the embedment zone for installation of well point headers or manifolds and pumps where depth of trench makes it uneconomical or impractical to pump from the surface elevation. Provide sufficient space between shoring cross braces to permit equipment operations and handling of forms, pipe, embedment and backfill, and other materials.

E. Upon discovery of unknown utilities, badly deteriorated utilities not designated for removal, or concealed conditions, discontinue work at that location. Notify the City Engineer and obtain instructions before proceeding.

F. Shoring of Trench Walls.

1. Install Special Shoring in advance of trench excavation or simultaneously with the trench excavation, so that the soils within the full height of the trench excavation walls will remain laterally supported at all times.

2. For all types of shoring, support trench walls in the pipe embedment zone throughout the installation. Provide trench wall supports sufficiently tight to prevent washing the trench wall soil out from behind the trench wall support.

3. Unless otherwise directed by the City Engineer, leave sheeting driven into or below the pipe embedment zone in place to preclude loss of support of foundation and embedment materials. Leave rangers, walers, and braces in place as long as required to support sheeting, which has been cut off, and the trench wall in the vicinity of the pipe zone.

4. Employ special methods for maintaining the integrity of embedment or foundation material. Before moving supports, place and compact embedment to sufficient depths to provide protection of pipe and stability of trench walls. As supports are moved, finish placing and compacting embedment.

5. If sheeting or other shoring is used below top of the pipe embedment zone, do not disturb pipe foundation and embedment materials by subsequent removal. Maximum thickness of removable sheeting extending into the embedment zone shall be the equivalent of a 1-inch-thick steel plate. Fill voids left on removal of supports with compacted backfill material.

G. Use of Trench Shields. When a trench shield (trench box) is used as a worker safety device, the following requirements apply:

1. Make trench excavations of sufficient width to allow shield to be lifted or pulled freely, without damage to the trench sidewalls.

2. Move trench shields so that pipe, and backfill materials, after placement and compaction, are not damaged nor disturbed, nor the degree of compaction reduced.

3. When required, place, spread, and compact pipe foundation and bedding materials beneath the shield. For backfill above bedding, lift the shield as each layer of backfill is placed and spread. Place and compact backfill materials against undisturbed trench walls and foundation.

4. Maintain trench shield in position to allow sampling and testing to be performed in a safe manner.

3.05 HANDLING EXCAVATED MATERIALS

A. Use only excavated materials which are suitable as defined in this Section and conforming to Section 02320 - Utility Backfill Materials. Place material suitable for backfilling in stockpiles at a distance from the trench to prevent slides or cave-ins.

B. When required, provide additional backfill material conforming to requirements of Section 02320 - Utility Backfill Materials.

C. Do not place stockpiles of excess excavated materials on streets and adjacent properties. Protect excess stockpiles for use on site.

3.06 GROUND WATER CONTROL

A. Implement ground water control according to Section 01578 - Control of Ground Water and Surface Water. Provide a stable trench to allow installation in accordance with the Specifications.

3.07 TRENCH FOUNDATION

A. Excavate bottom of trench to uniform grade to achieve stable trench conditions and satisfactory compaction of foundation or bedding materials.

B. Place trench dams in Class I foundations in line segments longer than 100 feet between manholes, and not less than one in every 500 feet of pipe placed. Install additional dams as needed to achieve workable construction conditions. Do not place trench dams closer than 5 feet from manholes.

3.08 PIPE EMBEDMENT, PLACEMENT, AND COMPACTION

A. Immediately prior to placement of embedment materials, the bottoms and sidewalls of trenches shall be free of loose, sloughing, caving, or otherwise unsuitable soil.

B. Place embedment including bedding, haunching, and initial backfill as shown on Drawings.

C. For pipe installation, manually spread embedment materials around the pipe to provide uniform bearing and side support when compacted. Do not allow materials to free-fall from heights greater than 24 inches above top of pipe. Perform placement and compaction directly against the undisturbed soils in the trench sidewalls, or against sheeting which is to remain in place.

D. Do not place trench shields or shoring within height of the embedment zone unless means to maintain the density of compacted embedment material are used. If moveable supports are used in embedment zone, lift the supports incrementally to allow placement and compaction of the material against undisturbed soil.

E. Place geotextile to prevent particle migration from the in-situ soil into open-graded (Class I) embedment materials or drainage layers.

F. Do not damage coatings or wrappings of pipes during backfilling and compacting operations. When embedding coated or wrapped pipes, do not use crushed stone or other sharp, angular aggregates.

G. Place haunching material manually around the pipe and compact it to provide uniform bearing and side support. If necessary, hold small-diameter or lightweight pipe in place during compaction of haunch areas and placement beside the pipe with sand bags or other suitable means.

H. Place electrical conduit, if used, directly on foundation without bedding.

I. Shovel in-place and compact embedment material using pneumatic tampers in restricted areas, and vibratory-plate compactors or engine-powered jumping jacks in unrestricted areas. Compact each lift before proceeding with placement of next lift. Water tamping is not allowed.

J. For water lines construction embedment, use bank run sand, concrete sand, gem sand, pea gravel, or crushed limestone as specified in Section 02320 - Utility Backfill Material. For water lines adhere to the following subparagraph numbers 1 and 2; for utility installation other than water, adhere to numbers 3 and 4 below:

1. Class I, II, and III Embedment Materials:

   a. Maximum 6 inches compacted lift thickness.

   b. Compact to achieve a minimum of 95 percent of maximum dry density as determined according to ASTM D 698.

   c. Moisture content to be within -3 percent to +5 percent of optimum as determined according to ASTM D 698, unless otherwise approved by City Engineer.

2. Cement Stabilized Sand:

   a. Maximum 6 inches compacted thickness.

b. Compact to achieve a minimum of 95 percent of maximum dry density as determined according to ASTM D 698.

c. Moisture content to be on dry side of optimum as determined according to ASTM D 698 but sufficient for effective hydration.

3. Class I embedment materials.

a. Maximum 6-inches compacted lift thickness.

b. Systematic compaction by at least two passes of vibrating equipment. Increase compaction effort as necessary to effectively embed the pipe to meet the deflection test criteria.

c. Moisture content as determined by Contractor for effective compaction without softening the soil of trench bottom, foundation or trench walls.

4. Class II embedment and cement stabilized sand.

a. Maximum 6-inches compacted thickness.

b. Compaction by methods determined by Contractor to achieve a minimum of 95 percent of the maximum dry density as determined according to ASTM D 698 for Class II materials and according to ASTM D 558 for cement stabilized materials.

c. Moisture content of Class II materials within 3 percent of optimum as determined according to ASTM D 698. Moisture content of cement stabilized sands on the dry side of optimum as determined according to ASTM D 558 but sufficient for effective hydration.

K. Place trench dams in Class I embedments in line segments longer than 100 feet between manholes, and not less than one in every 500 feet of pipe placed. Install additional dams as needed to achieve workable construction conditions. Do not place trench dams closer than 5 feet from manholes.

3.09 TRENCH ZONE BACKFILL PLACEMENT AND COMPACTION

A. Place backfill for pipe or conduits and restore surface as soon as practicable. Leave only the minimum length of trench open as necessary for construction.

B. Where damage to completed pipe installation work is likely to result from withdrawal of sheeting, leave the sheeting in place. Cut off sheeting 1.5 feet or more above the crown of the pipe. Remove trench supports within 5 feet from the ground surface.

C. For sewer pipes, use backfill materials described here as determined by trench limits. As trench zone backfill in paved areas for streets and to one foot back of curbs and

pavements, use cement stabilized sand for pipe of nominal sizes less than 36 inches. Uniformly backfill trenches partially within limits one foot from streets and curbs according to the paved area criteria. Use select backfill within one foot below pavement subgrade for rigid pavement. For asphalt concrete, use flexible base material within one foot below pavement subgrade.

D. For water lines, backfill in trench zone, including auger pits, with bank run sand, select fill, or random backfill material as specified in Section 02320 - Utility Backfill materials.

E. When shown on Drawings, a random backfill of suitable material may be used in trench zone for trench excavations outside pavements.

F. Place trench zone backfill in lifts and compact by methods selected by the Contractor. Fully compact each lift before placement of the next lift.

1. Bank run sand.

   a. Maximum 9-inches compacted lift thickness.

   b. Compaction by vibratory equipment to a minimum of 95 percent of the maximum dry density determined according to ASTM D 698.

   c. Moisture content within 3 percent of optimum determined according to ASTM D 698

2. Cement-stabilized sand.

   a. Maximum lift thickness determined by Contractor to achieve uniform placement and required compaction, but not exceeding 24 inches.

   b. Compaction by vibratory equipment to a minimum of 95 percent of the maximum dry density determined according to ASTM D 558.

   c. Moisture content on the dry side of optimum determined according to ASTM D 558 but sufficient for cement hydration.

3. Select fill.

   a. Maximum 6-inches compacted thickness.

   b. Compaction by equipment providing tamping or kneading impact to a minimum of 95 percent of the maximum dry density determined according to ASTM D 698.

   c. Moisture content within 2 percent of optimum determined according to ASTM D 698.

G. For trench excavations outside pavements, a random backfill of suitable material may be used in the trench zone.

1. Fat clays (CH) may be used as trench zone backfill outside paved areas at the Contractor's option. If the required density is not achieved, the Contractor, at his option and at no additional cost to the City, may use lime stabilization to achieve compaction requirements or use a different suitable material.

2. Maximum 9-inch compacted lift thickness for clayey soils and maximum 12-inch lift thickness for granular soils.

3. Compact to a minimum of 90 percent of the maximum dry density determined according to ASTM D 698.

4. Moisture content as necessary to achieve density.

H. For electric conduits, remove form work used for construction of conduits before placing trench zone backfill.

3.10 MANHOLES, JUNCTION BOXES, AND OTHER PIPELINE STRUCTURES

A. Meet the requirements of adjoining utility installations for backfill of pipeline structures, as shown on the Drawings.

3.11 FIELD QUALITY CONTROL

A. Test for material source qualifications as defined in Section 02320 - Utility Backfill Materials.

B. Provide excavation and trench safety systems at locations and to depths required for testing and retesting during construction at no additional cost to City.

C. Tests will be performed on a minimum of three different samples of each material type for plasticity characteristics, in accordance with ASTM D 4318, and for gradation characteristics, in accordance with Tex-101-E and Tex-110-E. Additional classification tests will be performed whenever there is a noticeable change in material gradation or plasticity.

D. At least three tests for moisture-density relationships will be performed initially for backfill materials in accordance with ASTM D 698, and for cement- stabilized sand in accordance with ASTM D 558. Additional moisture-density relationship tests will be performed whenever there is a noticeable change in material gradation or plasticity.

E. In-place density tests of compacted pipe foundation, embedment and trench zone backfill soil materials will be performed according to ASTM D 1556, or ASTM D 2922 and ASTM D 3017, and at the following frequencies and conditions.

1. A minimum of one test for every 20 cubic yards of compacted embedment and for every 50 cubic yards of compacted trench zone backfill material.

2. A minimum of three density tests for each full shift of Work.

3. Density tests will be distributed among the placement areas. Placement areas are: foundation, bedding, haunching, initial backfill and trench zone.

4. The number of tests will be increased if inspection determines that soil type or moisture content are not uniform or if compacting effort is variable and not considered sufficient to attain uniform density, as specified.

5. Density tests may be performed at various depths below the fill surface by pit excavation. Material in previously placed lifts may therefore be subject to acceptance/rejection.

6. Two verification tests will be performed adjacent to in-place tests showing density less than the acceptance criteria. Placement will be rejected unless both verification tests show acceptable results.

7. Recompacted placement will be retested at the same frequency as the first test series, including verification tests.

F. Recondition, recompact, and retest at Contractor's expense if tests indicate Work does not meet specified compaction requirements. For hardened soil cement with nonconforming density, core and test for compressive strength at Contractor's expense.

G. Acceptability of crushed rock compaction will be determined by inspection.

3.12 DISPOSAL OF EXCESS MATERIAL

A. Dispose of excess materials in accordance with requirements of Section 01576 - Waste Material Disposal

END OF SECTION

Section 02318

EXTRA UNIT PRICE WORK FOR EXCAVATION AND BACKFILL

PART 1 G E N E R A L

1.01 SECTION INCLUDES

A. Measurement and payment applicable to extra unit price work items for excavation and backfill made necessary by unusual or unforeseen circumstances encountered during utility installations.

B. Extra unit price work for excavation and backfill is paid only when authorized in advance by Project Manager.

1.02 MEASUREMENT AND PAYMENT

A. UNIT PRICES

1. Excavation Around Obstructions: Payment for excavation around obstructions is on cubic yard basis, measured in place, without deduction for volume occupied by portions of pipes, ducts, or other structures left in place across trenches excavated under this item.

2. Extra Hand Excavation: Payment for extra hand excavation is on cubic yard basis, measured in place.

3. Extra Machine Excavation: Payment for extra machine excavation is on cubic yard basis, measured in place.

4. Extra Placement of Backfill Material: Payment for extra placement of backfill material is on cubic yard basis, measured in place, for material installed as part of Work. At discretion of Project Manager, measurement of cubic yards may be calculated from volume of Extra Hand Excavation or Extra Machine Excavation for which replacement is made, minus volume of any Extra Placement of Granular Backfill authorized in conjunction with Work.

5. Extra Placement of Granular Backfill: Payment for extra placement of granular backfill material is on cubic yard basis, measured in place.

6. Extra Select Backfill: Payment for extra select backfill is on cubic yard basis, measured in place for a theoretical minimum trench width. The project Manager may authorize extra select backfill when soil from the excavation work does not include adequate quantities for placement of suitable on-site material (random backfill).

7. Refer to Section 01270 – Measurement and payment for unit price procedures.

1.03 DEFINITIONS

A. Excavation Around Obstructions: Excavation necessitated by obstruction of pipes (other than service connections 3 inches in diameter or less), ducts, or other structures, not shown on Drawings, and of an unusual or unforeseen nature which interfere with installation of utility piping by normal methods of excavation or auguring.

B. Extra Hand Excavation: Excavation by manual labor made necessary by unusual or unforeseen circumstances at locations approved in advance by Project Manager.

C. Extra Machine Excavation: Excavation by machine at or near project site to perform related work not included in original project scope but added for convenience of City, as approved in advance by Project Manager.

D. Extra Replacement of Backfill Material: Handling, backfill, and compaction of excavated material authorized under extra work bid items for Extra Hand Excavation or Extra Machine Excavation. Placement and compaction shall conform to requirements specified for excavation and backfill in Sections 02316 – Excavation and Backfill for Structures and 02317 – Excavation and Backfill for Utilities.

E. Extra Placement of Granular Backfill: Hauling, placing, and compacting granular backfill materials as approved by Project Manager in conjunction with Extra Replacement of Backfill Material. Materials placed under this item shall conform to requirements for Bank Run Sand, Cement Stabilized Sand, Concrete Sand, Gem Sand, Crushed Stone, or Crushed Concrete specified for backfill material in Sections 02316 – Excavation and Backfill for Structures and 02317 – Excavation and Backfill for Utilities.

F. Extra Select Backfill: Unsuitable material removed from the project and select backfill material hauled to the project, or conditioning unsuitable material on the site to make it select backfill. Provide select backfill material specified in Section 02320 – Utility Backfill Materials.

PART 2 P R O D U C T S Not Used

PART 3 E X E C U T I O N Not Used

END OF SECTION

Section 02320

UTILITY BACKFILL MATERIALS

PART 1 G E N E R A L

1.01 SECTION INCLUDES

A. Material Classifications.

B. Utility Backfill Materials:
- Concrete sand
- Gem sand
- Pea gravel
- Crushed stone
- Crushed concrete
- Bank run sand
- Select backfill
- Random backfill

C. Material Handling and Quality Control Requirements.

1.02 MEASUREMENT AND PAYMENT

A. Unit Prices.

1. No payment will be made for backfill material under this Section. Include payment in unit price for applicable utility installation.

2. Payment for backfill material, when included as a separate pay item, is on a cubic yard basis for material placed and compacted within theoretical trench width limits and thickness of material according to Drawings.

3. Refer to Section 01270 - Measurement and Payment for unit price procedures.

B. Stipulated Price (Lump Sum). If the Contract is a Stipulated Price Contract, payment for work in this Section is included in the total Stipulated Price.

1.03 DEFINITIONS

A. Unsuitable Material: Unsuitable soil materials are the following:

1. Materials that are classified as ML, CL-ML, MH, PT, OH, and OL according to ASTM D 2487.

2. Materials that cannot be compacted to the required density due to either gradation, plasticity, or moisture content.

3. Materials that contain large clods, aggregates, and stones greater than 4 inches in any dimension; debris, vegetation, and waste; or any other deleterious materials.

4. Materials that are contaminated with hydrocarbons or other chemical contaminants.

B. Suitable Material: Suitable soil materials are the following:

1. Those meeting specification requirements.

2. Unsuitable soils meeting specification requirements for suitable soils after treatment with lime or cement.

C. Foundation Backfill Materials: Natural soil or manufactured aggregate meeting Class I requirements and geotextile filter fabrics as required, to control drainage and material separation. Foundation backfill material is placed and compacted as backfill where needed to provide stable support for the structure foundation base. Foundation backfill materials may include concrete fill and seal slabs.

D. Foundation Base: Crushed stone aggregate with filter fabric as required, cement stabilized sand, or concrete seal slab. The foundation base provides a smooth, level working surface for the construction of the concrete foundation.

E. Backfill Material: Classified soil material meeting specified quality requirements for the designated application as embedment or trench zone backfill.

F. Embedment Material: Soil material placed under controlled conditions within the embedment zone extending vertically upward from top of foundation to an elevation 12 inches above top of pipe, and including pipe bedding, haunching, and initial backfill.

G. Trench Zone Backfill: Classified soil material meeting specified quality requirements and placed under controlled conditions in the trench zone from top of embedment zone to base course in paved areas or to the surface grading material in unpaved areas.

H. Foundation: Either suitable soil of the trench bottom, or material placed as backfill of over-excavation for removal and replacement of unsuitable or otherwise unstable soils.

I. Source: A source selected by the Contractor for supply of embedment or trench zone backfill material. A selected source may be the project excavation, off-site borrow pits, commercial borrow pits, or sand and aggregate production or manufacturing plants.

J. Refer to Section 02317 - Excavation and Backfill for Utilities for other definitions regarding utility installation by trench construction.

1.04 REFERENCES

A. ASTM C 33 - Specification for Concrete Aggregate.

B. ASTM C 40 - Test Method for Organic Impurities in Fine Aggregates for Concrete.

C. ASTM C 123 - Test Method for Lightweight Pieces in Aggregate.

D. ASTM C 131 - Test Method for Resistance to Degradation of Small-Size Coarse Aggregate by Abrasion and Impact in the Los Angeles Machine.

E. ASTM C 136 - Test Method for Sieve Analysis of Fine and Coarse Aggregates.

F. ASTM C 142 - Test Method for Clay Lumps and Friable Particles in Aggregates.

G. ASTM D 1140 - Test Method for Amount of Materials in Soils Finer Than No. 200 Sieve.

H. ASTM D 2487 - Classification of Soils for Engineering Purposes (Unified Soil Classification System).

I. ASTM D 2488 - Standard Practice for Description and Identification of Soils (Visual-Manual Procedure).

J. ASTM D 4318 - Test Method for Liquid Limit, Plastic Limit, and Plasticity Index of Soils.

K. ASTM D 4643 - Method for Determination of Water (Moisture) Content of Soil by the Microwave Oven Method.

L. TxDOT Tex-101-E - Preparation of Soil and Flexible Base Materials for Testing.

M. TxDOT Tex-104-E - Test Method for Determination of Liquid Limit of Soils (Part 1)

N. TxDOT Tex-106-E - Test Method - Methods of Calculating Plasticity Index of Soils.

O. TxDOT Tex-110-E - Determination of Particle Size Analysis of Soils.

1.05 SUBMITTALS

A. Conform to requirements of Section 01330 - Submittal Procedures.

B. Submit a description of source, material classification and product description, production method, and application of backfill materials.

C. Submit test results for samples of off-site backfill materials to comply with Paragraph 2.03, Materials Testing.

D. Before stockpiling materials, submit a copy of temporary easement or approval from landowner for stockpiling backfill material on private property.

E. For each delivery of material, provide a delivery ticket which includes source location.

1.06 TESTS

A. Perform tests of sources for backfill material in accordance with Paragraph 2.03B.

B. Verification tests of backfill materials may be performed by the City in accordance with Section 01454 - Testing Laboratory Services and in accordance with Paragraph 3.03.

C. Random fill obtained from the project excavation as source is exempt from prequalification requirements by Contractor but must be inspected by City testing lab for unacceptable materials based on ASTM D 2488.

PART 2 P R O D U C T S

2.01 MATERIAL CLASSIFICATIONS

A. Materials for backfill shall be classified for the purpose of quality control in accordance with the Unified Soil Classification Symbols as defined in ASTM D 2487. Material use and application is defined in utility installation specifications and Drawings either by class, as described in Paragraph 2.01B, or by product descriptions, as given in Paragraph 2.02.

B. Class Designations Based on Laboratory Testing:

1. Class I: Well-graded gravels and sands, gravel-sand mixtures, crushed well-graded rock, little or no fines (GW, SW):

   a. Plasticity index: nonplastic.

   b. Gradation: D_{60}/D_{10} - greater than 4 percent; amount passing No. 200 sieve - less than or equal to 5 percent.

2. Class II: Poorly graded gravels and sands, silty gravels and sands, little to moderate fines:

   a. Plasticity index: nonplastic to 4.

   b. Gradations:
      1) Gradation (GP, SP): amount passing No. 200 sieve - less than 5 percent.
      2) Gradation (GM, SM): amount passing No. 200 sieve - between 12 percent and 50 percent.
      3) Borderline gradations with dual classifications (e.g., SP-SM): amount passing No. 200 sieve - between 5 percent and 12 percent.

3. Class III: Clayey gravels and sands, poorly graded mixtures of gravel, sand, silt, and clay (GC, SC, and dual classifications, e.g., SP-SC):

a. Plasticity index: greater than 7.

b. Gradation: amount passing No. 200 sieve - between 12 percent and 50 percent.

4. Class IVA: Lean clays (CL).

a. Plasticity Indexes:
1) Plasticity index: greater than 7, and above A line.
2) Borderline plasticity with dual classifications (CL-ML): PI between 4 and 7.

b. Liquid limit: less than 50.

c. Gradation: amount passing No. 200 sieve - greater than 50 percent.

d. Inorganic.

5. Class IVB: Fat clays (CH)

a. Plasticity index: above A line.

b. Liquid limit: 50 or greater.

c. Gradation: amount passing No. 200 sieve - greater than 50 percent.

d. Inorganic.

6. Use soils with dual class designation according to ASTM D 2487, and which are not defined above, according to the more restrictive class.

2.02 PRODUCT DESCRIPTIONS

A. Soils classified as silt (ML), elastic silt (MH), organic clay and organic silt (OL, OH), and organic matter (PT) are not acceptable as backfill materials. These soils may be used for site grading and restoration in unimproved areas as approved by the City Engineer. Soils in Class IVB, fat clay (CH) may be used as backfill materials where allowed by the applicable backfill installation specification. Refer to Section 02316 - Excavation and Backfill for Structures and Section 02317 - Excavation and Backfill for Utilities.

B. Provide backfill material that is free of stones greater than 6 inches, free of roots, waste, debris, trash, organic material, unstable material, non-soil matter, hydrocarbon or other contamination, conforming to the following limits for deleterious materials:

1. Clay lumps: Less than 0.5 percent for Class I, and less than 2.0 percent for Class II, when tested in accordance with ASTM C 142.

2. Lightweight pieces: Less than 5 percent when tested in accordance with ASTM C 123.

3. Organic impurities: No color darker than standard color when tested in accordance with ASTM C 40.

C. Manufactured materials, such as crushed concrete, may be substituted for natural soil or rock products where indicated in the product specification, and approved by City Engineer, provided that the physical property criteria are determined to be satisfactory by testing.

D. Bank Run Sand: Durable bank run sand classified as SP, SW, or SM by the Unified Soil Classification System (ASTM D 2487) meeting the following requirements:

1. Less than 15 percent passing the number 200 sieve when tested in accordance with ASTM D 1140. The amount of clay lumps or balls not exceeding 2 percent.

2. Material passing the number 40 sieve shall meet the following requirements when tested in accordance with ASTM D 4318:

a. Liquid limit: not exceeding 25 percent.

b. Plasticity index: not exceeding 7.

E. Concrete Sand: Natural sand, manufactured sand, or a combination of natural and manufactured sand conforming to the requirements of ASTM C 33 and graded within the following limits when tested in accordance with ASTM C 136:

Sieve	Percent Passing
3/8"	100
No. 4	95 to 100
No. 8	80 to 100
No. 16	50 to 85
No. 30	25 to 60
No. 50	10 to 30
No. 100	2 to 10

F. Gem Sand: Sand conforming to the requirements of ASTM C 33 for course aggregates specified for number 8 size and graded within the following limits when tested in accordance with ASTM C 136:

Sieve	Percent Passing
3/8"	95 to 100

No. 4	60 to 80
No. 8	15 to 40

G. Pea Gravel: Durable particles composed of small, smooth, rounded stones or pebbles and graded within the following limits when tested in accordance with ASTM C 136:

Sieve	Percent Passing
1/2"	100
3/8"	85 to 100
No. 4	10 to 30
No. 8	0 to 10
No. 16	0 to 5

H. Crushed Aggregates: Crushed aggregates consist of durable particles obtained from an approved source and meeting the following requirements:

1. Materials of one product delivered for the same construction activity from a single source.
2. Non-plastic fines.
3. Los Angeles abrasion test wear not exceeding 45 percent when tested in accordance with ASTM C 131.
4. Crushed aggregate shall have a minimum of 90 percent of the particles retained on the No. 4 sieve with 2 or more crushed faces as determined by Test Method Tex-460-A, Part I.
5. Crushed stone: Produced from oversize plant processed stone or gravel, sized by crushing to predominantly angular particles from a naturally occurring single source. Uncrushed gravel are not acceptable materials for embedment where crushed stone is shown on the applicable utility embedment drawing details.
6. Crushed Concrete: Crushed concrete is an acceptable substitute for crushed stone as utility backfill. Gradation and quality control test requirements are the same as crushed stone. Provide crushed concrete produced from normal weight concrete of uniform quality; containing particles of aggregate and cement material, free

from other substances such as asphalt, reinforcing steel fragments, soil, waste gypsum (calcium sulfate), or debris.

7. Gradations, as determined in accordance with Tex-110-E.

Sieve	Percent Passing by Weight for Pipe Embedment by Ranges of Nominal Pipes Sizes		
	>15"	15" - 8"	<8"
1"	95 - 100	100	-
3/4"	60 - 90	90 - 100	100
1/2"	25 - 60	-	90 - 100
3/8"	-	20 - 55	40 - 70
No. 4	0 - 5	0 - 10	0 - 15
No. 8	-	0 - 5	0 - 5

I. Select Backfill: Class III clayey gravel or sand or Class IV lean clay with a plasticity index between 7 and 20 or clayey soils treated with lime in accordance with Section 02901 - Pavement Repair and Resurfacing, to meet plasticity criteria.

J. Random Backfill: Any suitable soil or mixture of soils within Classes I, II, III and IV; or fat clay (CH) where allowed by the applicable backfill installation specification. Refer to Section 02316 - Excavation and Backfill for Structures and Section 02317 - Excavation and Backfill for Utilities.

K. Cement Stabilized Sand: Conform to requirements of Section 02321 - Cement Stabilized Sand.

L. Concrete Backfill: Conform to Class B concrete as specified in Section 03315 - Concrete for Utility Construction.

2.03 MATERIAL TESTING

A. Ensure that material selected, produced and delivered to the project meets applicable specifications and is of sufficient uniform properties to allow practical construction and quality control.

B. Source or Supplier Qualification. Perform testing, or obtain representative tests by suppliers, for selection of material sources and products. Provide test results for a minimum of three samples for each source and material type. Tests samples of processed materials from current production representing material to be delivered. Tests shall verify that the materials meet specification requirements. Repeat qualification test procedures each time the source characteristic changes or there is a planned change in source location or supplier. Qualification tests shall include, as applicable:

1. Gradation. Complete sieve analyses shall be reported regardless of the specified control sieves. The range of sieves shall be from the largest particle through the No. 200 sieve.

2. Plasticity of material passing the No. 40 sieve.

3. Los Angeles abrasion wear of material retained on the No. 4 sieve.

4. Clay lumps.

5. Lightweight pieces

6. Organic impurities

C. Production Testing. Provide reports to the City Engineer from an independent testing laboratory that backfill materials to be placed in the Work meet applicable specification requirements.

D. Assist the City Engineer in obtaining material samples for verification testing at the source or at the production plant.

PART 3 E X E C U T I O N

3.01 SOURCES

A. Use of material encountered in the trench excavations is acceptable, provided applicable specification requirements are satisfied. If excavation material is not acceptable, provide from other approved source.

B. Identify off-site sources for backfill materials at least 14 days ahead of intended use so that the City Engineer may obtain samples for verification testing.

C. Obtain approval for each material source by the City Engineer before delivery is started. If sources previously approved do not produce uniform and satisfactory products, furnish materials from other approved sources. Materials may be subjected to inspection or additional verification testing after delivery. Materials which do not meet the requirements of the specifications will be rejected. Do not use material which, after approval, has become unsuitable for use due to segregation, mixing with other materials, or by contamination. Once a material is approved by the City Engineer, expense for sampling and testing required to change to a different material will be credited to the City through a change order.

D. Bank run sand, select backfill, and random backfill, if available in the project excavation, may be obtained by selective excavation and acceptance testing. Obtain additional quantities of these materials and other materials required to complete the work from off-site sources.

E. The City does not represent or guarantee that any soil found in the excavation work will be suitable and acceptable as backfill material.

3.02 MATERIAL HANDLING

A. When backfill material is obtained from either a commercial or non-commercial borrow pit, open the pit to expose the vertical faces of the various strata for identification and selection of approved material to be used. Excavate the selected material by vertical cuts extending through the exposed strata to achieve uniformity in the product.

B. Establish temporary stockpile locations for practical material handling and control, and verification testing by the City Engineer in advance of final placement. Obtain approval from landowner for storage of backfill material on adjacent private property.

C. When stockpiling backfill material near the project site, use appropriate covers to eliminate blowing of materials into adjacent areas and prevent runoff containing sediments from entering the drainage system.

D. Place stockpiles in layers to avoid segregation of processed materials. Load material by making successive vertical cuts through entire depth of stockpile.

3.03 FIELD QUALITY CONTROL

A. Quality Control

1. The City Engineer may sample and test backfill at:

a. Sources including borrow pits, production plants and Contractor's designated off-site stockpiles.

b. On-site stockpiles.

c. Materials placed in the Work.

2. The City Engineer may resample material at any stage of work or location if changes in characteristics are apparent.

B. Production Verification Testing: The City=s testing laboratory will provide verification testing on backfill materials, as directed by the City Engineer. Samples may be taken at the source or at the production plant, as applicable.

END OF SECTION

Section 02321

CEMENT STABILIZED SAND

PART 1 G E N E R A L

1.01 SECTION INCLUDES

A. Cement stabilized sand material.

1.02 MEASUREMENT AND PAYMENT

A. Unit Prices.

1. No payment will be made for cement stabilized sand under this Section. Include payment for cement stabilized sand in unit price for applicable utility or structure installation section.

2. If use of cement stabilized sand is allowed based on the City Engineer's direction, the extra unit price item will be paid on a per cubic yard basis. A conversion between volume calculated based on theoretical limits and total weight will be made based on a ratio of 1.64 tons per cubic yard.

3. Refer to Paragraph 3.03 B for material acceptance criteria for partial payments.

4. Refer to Section 01270 - Measurement and Payment for unit price procedures.

B. Stipulated Price (Lump Sum). If the Contract is a Stipulated Price Contract, payment for work in this Section is included in the total Stipulated Price.

1.03 REFERENCES

A. ASTM C 33 - Standard Specification for Concrete Aggregates (Fine Aggregate).

B. ASTM C 40 - Standard Test Method for Organic Impurities in Fine Aggregates for Concrete.

C. ASTM C 94 - Standard Specification for Ready-Mixed Concrete.

D. ASTM C 123 - Standard Test Method for Lightweight Pieces in Aggregate.

E. ASTM C 142 - Standard Test Method for Clay Lumps and Friable Particles in Aggregates.

F. ASTM C 150 - Specification for Portland Cement.

G. ASTM D 558 - Standard Test Method for Moisture-Density Relations of Soil Cement-Mixtures.

H. ASTM D 1633 - Standard Test Method for Compressive Strength of Molded Soil-Cement Cylinders.

J. ASTM D 2487 - Standard Test Method for Classification of Soils for Engineering Purposes (Unified Soil Classification System).

K. ASTM D 3665 - Practice for Random Sampling of Construction Materials.

L. ASTM D 4318 - Standard Test Method for Liquid Limit, Plastic Limit, and Plasticity Index of Soils.

1.04 SUBMITTALS

A. Submittals shall conform to requirements of Section 01330 - Submittal Procedures.

B. Submit proposed target cement content and production data for sand-cement mixture in accordance with the requirements of Paragraph 2.03, Material Qualifications.

1.05 DESIGN REQUIREMENTS

A. Sand-cement mixture shall produce a minimum unconfined compressive strength of 100 pounds per square inch in 48 hours.

1. Design will be based on strength specimens molded in accordance with ASTM D 558 at moisture content within 3 percent of optimum and within 4 hours of batching.

2. Determine minimum cement content from production data and statistical history. Mix shall contain not less than 1.1 sacks of cement per ton of dry sand.

PART 2 P R O D U C T S

2.01 MATERIALS

A. Cement: Type I Portland cement conforming to ASTM C 150.

B. Sand: Clean, durable sand meeting grading requirements for fine aggregates of ASTM C 33, or requirements for bank run sand of Section 02320 - Utility Backfill Materials, and the following requirements:

1 . Classified as SW, SP, SW-SM, SP-SM, or SM by the United Soil Classification System of ASTM D 2487.

2. Deleterious materials:

a. Clay lumps, ASTM C 142; less than 0.5 percent.

b. Lightweight pieces, ASTM C 123; less than 5.0 percent.

c. Organic impurities, ASTM C 40, color no darker than the standard color.

3. Plasticity index of 4 or less when tested in accordance with ASTM D 4318.

C. Water: Potable water, free of oils, acids, alkalies, organic matter, or other deleterious substances, meeting requirements of ASTM C 94.

2.02 MIXING MATERIALS

A. Add required amount of water and mix thoroughly in a pugmill-type mixer.

B. Stamp batch ticket at plant with time of loading. Material not placed and compacted within 4 hours after mixing shall be rejected.

2.03 MATERIAL QUALIFICATION

A. Determine the target cement content of the material as follows:

1. Obtain samples of sand-cement mixtures at the production facility representing a range of cement content consisting of at least three points.

2. Complete the molding of samples within 4 hours after the addition of water.

3. Perform strength tests (average of two specimens) at 48 hours and 7 days.

4. Perform cement content tests on each sample.

5. Perform moisture content tests on each sample.

6. Plot average 48-hour strength vs. cement content

7. Record scale calibration date, sample date, sample time, molding time, cement feed dial settings, and silo pressure (if applicable).

B. Test the raw sand for the following properties at the point of entry into the pug-mill:

1. Gradation.

2. Plasticity index.

3. Organic impurities.
4. Clay lumps and friable particles.

5. Lightweight pieces.

6. Moisture content.

7. Classification.

C. (not used)

D. The target content may be adjusted if statistical history so indicates. For determination of minimum product performance use the formula:

$$f = c \square \ 1/2 \text{ standard deviation}$$

PART 3 E X E C U T I O N

3.01 PLACING

A. Place sand-cement mixture in a maximum 12-inch-thick loose lift and compact to 95 percent of ASTM D 558, unless otherwise specified. Refer to related specifications for thickness of lifts in other applications. The target moisture content during compaction is □ 3 percent of optimum. Perform and complete compaction of sand-cement mixture within 4 hours after addition of water to mix at the plant.

B. Do not place or compact sand-cement mixture in standing or free water.

3.02 FIELD QUALITY CONTROL

A. Testing will be performed under provisions of Section 01454 - Testing Laboratory Services.

B. Samples of delivered product will be taken in the field at point of delivery for testing in accordance with ASTM D 3665.

C. Four specimens shall be prepared and molded (for each sample obtained) in accordance with ASTM D 558, Method A, without adjusting the moisture content. Samples will be molded at approximately the same time the material is being used, but no later than 4 hours after water is added to mix.

D. After molding, specimens will be removed from the molds and sealed in a plastic bag or similar material to minimize moisture loss. Specimens will be cured at a room temperature between 60 and 80 degrees F until ready for testing.

E. Specimens will be tested for compressive strength in accordance with ASTM D 1633, Method A. Two specimens will be tested at 48 hours plus or minus 2 hours and two specimens will be tested at 7 days plus or minus 4 hours.

F. A strength test will be the average of the strengths of two specimens molded from the same sample of material and tested at the same age. The average daily strength will be the average of the strengths of all specimens molded during one day's production and tested at the same age.

G. Precision and Bias: Test results shall meet the recommended guideline for precision in ASTM D 1633 Section 9.

H. Reporting: Test reports shall contain, as a minimum, the following information:

1. Supplier and plant number
2. Time material was batched
3. Time material was sampled
4. Test age (exact hours)
5. Average 48-hour strength
6. Average 7-day strength
7. Specification section number
8. Compliance / non-compliance
9. Mixture identification
10. Truck and ticket numbers
11. The time of molding
12. Moisture content at time of molding
13. Required strength
14. Test method designations
15. Compressive strength data as required by ASTM D 1633

3.03 ACCEPTANCE

A. The strength level of the material will be considered satisfactory if:

1. The average 48-hour strength is greater than 100 psi with no individual strength test below 60 psi, or

2. All 7-day individual strength tests exceed 100 psi.

B. The material will be considered acceptable for partial payment if any 7-day individual strength test (average of two specimens) is less than 100 psi but greater than 60 psi.

C. The material will be considered unacceptable and subject to removal and replacement at the Contractor’s expense if any individual strength test has a 7-day strength less than 60 psi.

D. If the moving average of any three daily 48-hour averages falls below 100 psi, the supplier shall discontinue shipment to the project until that plant is capable of producing a material which exceeds 100 psi at 48 hours. A total of five 48-hour strength tests shall be made in this determination with no individual strength tests less than 100 psi.

E. The City Engineer shall maintain a data base of strength tests performed on 100 psi cement stabilized sand material for City projects. The statistical history shall be used for approval of material on future City projects.

F. The testing laboratory shall notify the Contractor, City Engineer, and material supplier by facsimile of all tests indicating results falling below specified strength requirements.

END OF SECTION

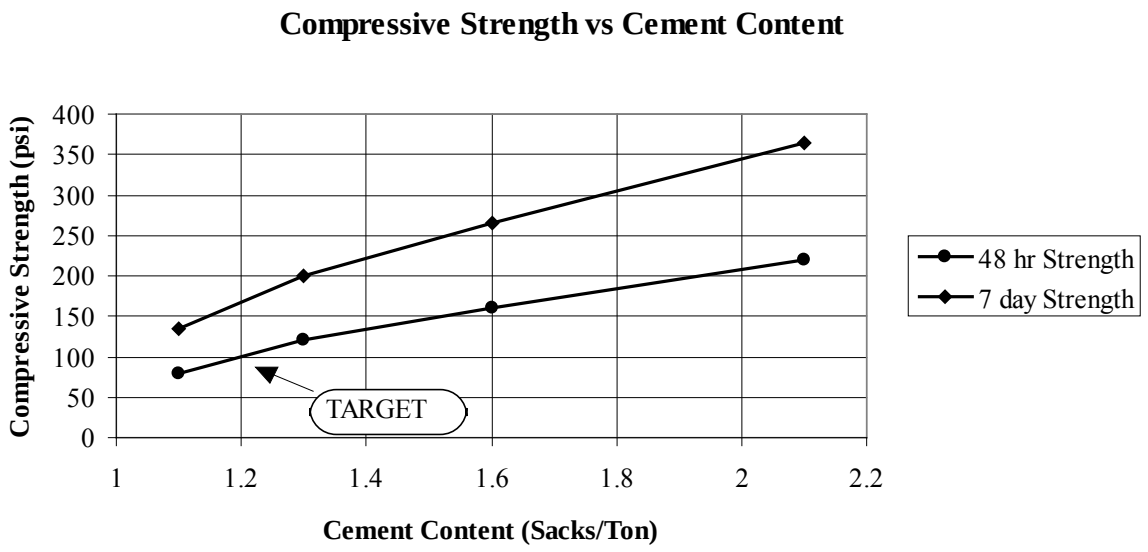
Compressive Strength vs Cement Content
Compressive Strength (psi)
400
350
300
250
200
150
100
50
0
1
1.2
1.4
1.6
1.8
2
2.2
Cement Content (Sacks/Ton)
TARGET
48 hr Strength
7 day Strength

Section 02336

LIME STABILIZED SUBGRADE

PART 1 G E N E R A L

1.01 SECTION INCLUDES

A. Foundation course of lime stabilized subgrade material.

1. Application of lime slurry to subgrade.

2. Mixing, compaction, and curing of lime slurry, water, and subgrade into a stabilized foundation.

1.02 MEASUREMENT AND PAYMENT

A. Unit Prices.

1. Measurement and payment for lime stabilized subgrade is on a square yard basis compacted in place to proper density. Separate measurement will be made for each required thickness of subgrade course.

a. Limits of measurement shall match actual pavement replaced, but no greater than maximum pavement replacement limits shown on Drawings. Limits for measurement will be extended to include installed lime stabilized subgrade material that extends 1 foot beyond outside edge of pavement to be replaced, except where proposed pavement section shares common longitudinal or transverse edge with existing pavement section. No payment will be made for lime stabilized subgrade in areas beyond these limits.

b. Limits of measurement and payment shall match pavement replacement limits shown on Drawings, except as noted in Paragraph 1.02.A.1.a, or as approved by Project Manager.

2. Measurement and payment for lime is by ton of 2000 pounds dry weight basis. Calculate weight of dry solids for lime slurry based on percentage by dry weight solids.

3. Refer to Section 01270 - Measurement and Payment for unit price procedures.

B. Stipulated Price (Lump Sum). If Contract is Stipulated Price Contract, payment for Work in this Section is included in total Stipulated Price.

1.03 DEFINITION

A. Moist Cure: Curing soil and lime to obtain optimum hydration.
B. 1000-Foot Roadway Section: 1000 feet per lane width or approximately 500 square

yards of compacted subgrade for other than full-lane-width roadway sections.

1.04 REFERENCES

A. ASTM D 698 - Standard Test Method for Laboratory Compaction Characteristics of Soil Using Standard Effort (12,400 ft-lbf/ft^3 (600 kN-m/m^3).

B. ASTM D 2922 - Standard Test Methods for Density of Soil and Soil-Aggregate in Place by Nuclear Methods (Shallow Depth).

C. ASTM D 4318 - Standard Test Method for Liquid Limit, Plastic Limit, and Plasticity Index of Soils.

D. TxDOT Tex-101-E (Part III) - Preparation of Soil and Flexible Base Material for Testing.

E. TxDOT Tex-140-E - Measuring Thickness of Pavement Layer.

F. TxDOT Tex-600-J - Sampling and Testing Hydrated Lime, Quicklime, and Commercial Lime Slurry.

1.05 SUBMITTALS

A. Conform to requirements of Section 01330 - Submittal Procedures.

B. Submit certification that hydrated lime, quicklime, or commercial lime slurry complies with specifications.

C. Submit weight tickets, certified by supplier, with each bulk delivery of lime to work site.

1.06 DELIVERY, STORAGE AND HANDLING

A. Bagged lime shall bear manufacturer's name, product identification, and certified weight. Bags varying more than 5 percent of certified weight may be rejected; average weight of 50 random bags in each shipment shall not be less than certified weight.

B. Store lime in weatherproof enclosures. Protect lime from ground dampness.

PART 2 P R O D U C T S

2.01 WATER

A. Use clean, clear water, free from oil, acids, alkali, or vegetation.

2.02 LIME

A. Type A - Hydrated Lime: Dry material consisting essentially of calcium hydroxide or mixture of calcium hydroxide and an allowable percentage of calcium oxide as listed in chemical composition chart.

B. Type B - Commercial Lime Slurry: Liquid mixture consisting essentially of lime solids and water in slurry form. Water or liquid portion shall not contain dissolved material in sufficient quantity to be injurious or objectionable for purpose intended.

C. Type C - Quicklime: Dry material consisting essentially of calcium oxide. Furnish quicklime in either of the following grades:

1. Grade DS: Pebble quicklime of gradation suitable for use in preparation of slurry for wet placing.

2. Grade S: Finely-graded quicklime for use in preparation of slurry for wet placing. Donor use grade S quicklime for dry placing.

D. Conform to the following requirements:

CHEMICAL COMPOSITION	TYPE		
	A	B	C
Active lime content, % by weight $Ca(OH)_2$+CaO	90.0 min[1]	87.0 min[2]	-
Unhydrated lime content, % by weight CaO	5.0 max	-	87.0 min
Free water content, % by weight H_2O	5.0 max	-	-
SIZING			
Wet Sieve, as % by weight residue retained:			
No. 6	0.2 max	0.2 max[2]	8.0 max[3]
No. 30	4.0 max	4.0 max[2]	-
Dry sieve, as % by weight residue retained:			
1-inch	-	-	0.0
1/2-inch	-	-	10.0 max

Notes:
1. Maximum 5.0% by weight CaO shall be allowed in determining total active lime content.
2. Maximum solids content of slurry.
3. Total active lime content, as CaO, in material retained on No. 6 sieve shall not exceed 2.0% by weight of original Type C lime.

E. Deliver lime slurry to job site as commercial lime, or prepare at job site by using hydrated lime or quicklime. Provide slurry free of liquids other than water and of consistency that can be handled and uniformly applied without difficulty.

F. Lime containing magnesium hydroxide is prohibited.

2.03 SOIL

A. Soil to receive lime treatment may include borrow or existing subgrade material, existing pavement structure, or combination of all three. Where existing pavement or base material is encountered, pulverized or scarify material so that 100 percent of sampled material passes 2- inch sieve.

PART 3 E X E C U T I O N

3.01 EXAMINATION

A. Verify compacted subgrade will support imposed loads.

B. Verify subgrade lines and grades.

3.02 PREPARATION

A. Complete backfill of utilities prior to stabilization.

B. Cut material to bottom of subgrade using an approved cutting and pulverizing machine meeting following requirements:

1. Cutters accurately provide smooth surface over entire width of cut to plane of secondary grade.

2. Provide cut to depth as specified or shown in the Drawings.

C. Alternatively, scarify or excavate to bottom of stabilized subgrade. Remove material or windrow to expose secondary grade. Obtain uniform stability.

D. Correct wet or unstable material below secondary grade by scarifying, adding lime, and compacting as directed by Project Manager.

E. Pulverize existing material so that 100 percent passes a 1-3/4-inch sieve.

3.03 LIME SLURRY APPLICATION

A. Apply slurry with distributor truck equipped with an agitator to keep lime and water in consistent mixture. Make successive passes over measured section of roadway to attain proper moisture and lime content. Limit spreading to an area where preliminary mixing operations can be completed on same working day.

B. Minimum lime content shall be 5 percent of dry unit weight of subgrade as determined by ASTM D 698

3.04 PRELIMINARY MIXING

A. Use approved single-pass or multiple-pass rotary speed mixers to mix soil, lime, and water to required depth. Obtain homogeneous friable mixture free of clods and lumps.

B. Shape mixed subgrade to final lines and grades.

C. Eliminate following operations and final mixing if pulverization requirements of Paragraph 3.05C can be met during preliminary mixing:

1. Seal subgrade as precaution against heavy rainfall by rolling lightly with light pneumatic rollers.

2. Cure soil lime material for 24 to 72 hours or as required to obtain optimum hydration. Keep subgrade moist during cure.

3.05 FINAL MIXING

A. Use approved single-pass or multiple-pass rotary speed mixers to uniformly mix cured soil and lime to required depth.

B. Add water to bring moisture content of soil mixture to optimum or above.

C. Mix and pulverize until all material passes 13/4-inch sieve; minimum of 85 percent, excluding non-slacking fractions, passes 3/4-inch sieve; and minimum of 60 percent excluding non-slacking fractions passes No. 4 sieve. Test according to TxDOT Tex-101-E, Part III using dry method.

D. Shape mixed subgrade to final lines and grades.

E. Do not expose hydrated lime to open air for 6 hours or more during interval between application and mixing. Avoid excessive hydrated lime loss due to washing or blowing.

3.06 COMPACTION

A. Aerate or sprinkle to attain optimum moisture content to 3 percent above optimum, as determined by ASTM D 698 on material sample from roadway after final mix with lime.

B. Start compaction immediately after final mixing.

C. Spread and compact in two or more equal layers where total compacted thickness is greater than equipment manufacturer's recommended range of mixing and compaction.

D. Compact with approved heavy pneumatic or vibrating rollers, or combination of tamping rollers and light pneumatic rollers. Begin compaction at bottom and continue until entire depth is uniformly compacted.

E. Do not allow stabilized subgrade to mix with underlying material. Correct irregularities or weak spots immediately by replacing material and recompacting.

F. Compact subgrade to minimum density of 95 percent of maximum dry density, according to ASTM D 698, at moisture content of optimum to 3 percent above optimum, unless otherwise indicated on Drawings:

G. Seal with approved light pneumatic tired rollers. Prevent surface hair line cracking. Rework and recompact at areas where hairline cracking develops.

3.07 CURING

A. Moist cure for minimum of 3 days before placing base or surface course, or opening to traffic. Subgrade may be opened to traffic after 2 days when adequate strength has been attained to prevent damage. Restrict traffic to light pneumatic rollers or vehicles weighing less than 10 tons.

B. Keep subgrade surface damp by sprinkling. Roll with light pneumatic roller to keep surface knit together.

C. Place base or surface within 14 days after final mixing and compaction. Restart compaction and moisture content of base material when time is exceeded.

3.08 TOLERANCES

A. Completed surface: smooth and conforming to typical section and established lines and grades.

B. Top of compacted surface: Plus or minus 1/4 inch in cross section or in 16-foot length.

C. Depth of lime stabilization shall be plus or minus one inch of specified depth for each 1000- foot roadway section.

3.09 FIELD QUALITY CONTROL

A. Testing will be performed under provisions of Section 01454 - Testing Laboratory Services.

B. Test soils, lime, and mixtures as follows:

1. Tests and analysis of soil materials will be performed in accordance with ASTM D 4318, using the wet preparation method.

2. Sampling and testing of lime slurry shall be in accordance with TxDOT Tex-600-J, except using a lime slurry cup.
3. Sample mixtures of hydrated lime or quicklime in slurry form will be tested to establish compliance with specifications.

4. Moisture-density relationship will be established on material sampled from roadway, after stabilization with lime and final mixing, in accordance with

ASTM 698, Moist preparation Method.

C. In-place depth will be evaluated for each 1000-foot roadway section and determined in accordance with TxDOT Tex-140-E in hand excavated holes. For each 1000-foot section, 3 phenolphthalein tests will be performed. Average stabilization depth for 1000-foot section will be based on average depth for three tests.

D. Perform compaction testing in accordance with ASTM D 2922. Three tests will be performed for each 1000-foot roadway section.

E. Pulverization analysis will be performed as required by Paragraph 3.05C on material sampled during mixing of each production area. Three tests will be performed per 1000-foot roadway section or a minimum of once daily.

3.10 REWORK OF FAILED SECTIONS

A. Rework sections that do not meet specified thickness.

B. Perform the following steps when more than 72 hours have lapsed since completion of compaction.

1. Moist cure for minimum of 3 days after compaction to required density.

2. Add lime at rate of 25 percent of specified rate at no additional cost to City.

3. Moisture density test of reworked material must be completed by laboratory before field compaction testing can be completed.

3.11 PROTECTION

A. Maintain stabilized subgrade to lines and grades and in good condition until placement of base or surface course. Protect asphalt membrane from being picked up by traffic.

B. Repair defects immediately by replacing material to full depth.

END OF SECTION

Section 02506

POLYVINYL CHLORIDE PIPE

PART 1 G E N E R A L

1.01 SECTION INCLUDES

A. Polyvinyl chloride pressure pipe for water distribution, in nominal diameters 4 inches through 20 inches.

B. Polyvinyl chloride sewer pipe for gravity sewers in nominal diameters 4 inches through 48 inches.

C. Polyvinyl chloride pressure pipe for gravity sewers and force mains in nominal diameters 4 inches through 20 inches.

1.02 MEASUREMENT AND PAYMENT

A. Unit Prices.

1. No separate payment will be made for PVC pipe under this Section. Include cost in unit price for work included as specified in the following sections: a. Section 02511 - Water Lines b. Section 02531 - Gravity Sanitary Sewers c. Section 02532 - Sanitary Sewer Force Mains d. Section 02631 - Storm Sewers

2. Refer to Section 01270 - Measurement and Payment for unit price procedures.

B. Stipulated Price (Lump Sum). If Contract is Stipulated Price Contract, payment for work in this Section is included in total Stipulated Price.

1.03 REFERENCES

A. ANSI A 21.16 (AWWA C 116) - Protective Fusion Bonded Epoxy Coating for the Interior and Exterior Surfaces of Ductile Iron and Grey Iron Fittings for Water Supply Service.

B. ASTM D 1248 - Standard Specification for Polyethylene Plastics Molding and Extrusion Materials.

C. ASTM D 1784 - Standard Specification for Rigid Poly (Vinyl Chloride) (PVC) Compounds and Chlorinated Poly (Vinyl Chloride) (CPVC) Compounds.

D. ASTM D 2241 - Standard Specification for Poly (Vinyl Chloride) (PVC) Pressure-Rated Pipe (SDR Series).

E. ASTM D 2321 - Standard Practice for Underground Installation of Thermoplastic Pipe for Sewers and Other Gravity-Flow Applications.

F. ASTM D 2444 - Standard Test Method for Determination of the Impact Resistance of

Thermoplastic Pipe and Fittings by Means of a Tup (Falling Weight).

G. ASTM D 2680 - Specification for Acrylonitrile-Butadiene-Styrene (ABS) and Poly (Vinyl Chloride) (PVC) Composite Sewer Piping.

H. ASTM D 3034 - Specification for Type PSM Poly (Vinyl Chloride) (PVC) Sewer Pipe and Fittings.

I. ASTM D 3139 - Standard Specification for Joints for Plastic Pressure Pipes Using Flexible Elastomeric Seals.

J. ASTM D 3212 - Standard Specification for Joints for Drain and Sewer Plastic Pipes Using Flexible Elastomeric Seals.

K. ASTM F 477 - Standard Specification for Elastomeric Seals (Gaskets) for Joining Plastic Pipe.

L. ASTM F 679 - Standard Specification for Poly (Vinyl Chloride) (PVC) Large-Diameter Plastic Gravity Sewer Pipe and Fittings.

M. ASTM F 794 - Standard Specification for Poly (Vinyl Chloride) (PVC) Profile Gravity Sewer Pipe and Fittings Based on Controlled Inside Diameter.

N. ASTM F 949 - Standard Specification for Poly (Vinyl Chloride) (PVC) Corrugated Sewer Pipe with Smooth Interior and Fittings.

O. AWWA C 110 - American National Standard for Ductile-Iron and Gray-Iron Fittings, 3 Inches Through 48 Inches for Water.

P. AWWA C 111 - American National Standard for Rubber-Gasket Joints for Ductile-Iron Pressure Pipe and Fittings.

Q. AWWA C 900 - Standard for Polyvinyl Chloride (PVC) Pressure Pipe, 4 Inches Through 12 Inches for Water Distribution.

R. AWWA C 905 - Standard for Polyvinyl Chloride (PVC) Pressure Pipe and Fabricated Fittings, 14 In. Through 48 In., for Water Transmission and Distribution.

S. AWWA C 909 - Standard for Molecularly-Oriented Polyvinyl Chloride (PVCO) Pressure Pipe, 4 Inches through 12 Inches (100mm through 300 mm), for Water Distribution.

T. PPI TR3 - Policies and Procedures for Developing Recommended Hydrostatic Design Stresses for Thermoplastic Pipe Materials. U. UNI-B-13 - Recommended Standard Performance Specification for Joint Restraint Devices for Use with Polyvinyl Chloride Pipe.

1.04 SUBMITTALS

A. Conform to requirements of Section 01330 - Submittal Procedures.

B. Submit shop drawings showing design of new pipe and fittings indicating alignment and grade, laying dimensions, fabrication, fittings, flanges, and special details.

1.05 QUALITY CONTROL

A. Submit manufacturer's certifications that PVC pipe and fittings meet requirements of this Section and AWWA C 900, AWWA C 909 and AWWA C 905 for pressure pipe applications, or appropriate ASTM standard specified for gravity sewer pipe.

B. Submit manufacturer's certification that PVC pressure pipe for water lines and force mains has been hydrostatically tested at factory in accordance with AWWA C 900, AWWA C 909 and AWWA C 905, and this Section.

C. When foreign manufactured material is proposed for use, have material tested for conformance to applicable ASTM requirements by certified independent testing laboratory located in United States. Certification from other source is not acceptable. Furnish copies of test reports to Project Manager for review. Cost of testing paid by Contractor.

PART 2 P R O D U C T S

2.01 MATERIAL

A. Use PVC compounds in manufacture of pipe that contain no ingredient in amount that has been demonstrated to migrate into water in quantities considered to be toxic.

B. Furnish PVC pressure pipe manufactured from Class 12454-A or Class 12454-B virgin PVC compounds as defined in ASTM D 1784. Use compounds qualifying for rating of 4000 psi for water at 73.4 F per requirements of PPI TR3. Provide pipe which is homogeneous throughout, free of voids, cracks, inclusions, and other defects, uniform as commercially practical in color, density, and other physical properties. Deliver pipe with surfaces free from nicks and scratches with joining surfaces of spigots and joints free from gouges and imperfections which could cause leakage.

C. PVC Restrained Pipe: Must be listed on City's current Product Approval List.

1. Pipe Material:

a. DR 18: For restrained joints where shown on Drawings.
b. DR 14: For alternate to offset pipe sections shown on Drawings. Do not use PVC for offset sections with depth of cover greater than 20 feet or less than 4 feet. Do not use PVC in potentially petroleum contaminated areas.

D. Water Service.

1. Provide self-extinguishing PVC pipe that bears Underwriters' Laboratories

mark of approval and is acceptable without penalty to Texas State Fire Insurance Committee for use in fire protection lines.

2. Bear National Sanitation Foundation Seal of Approval (NSF-PW).

E. Gaskets:

1. Gaskets shall meet requirements of ASTM F 477. Use elastomeric factory-installed gaskets to make joints flexible and watertight.

2. Flat Face Mating Flange: Full faces 1/8-inch-thick ethylene propylene (EPR) rubber.

3. Raised Face Mating Flange: Flat ring 1/8-inch ethylene propylene (EDR) rubber, with filler gasket between OD of raised face and flange OD to protect flange from bolting moment.

F. Lubricant for rubber-gasketed joints: Water soluble, non-toxic, non-objectionable in taste and odor imparted to fluid, non-supporting of bacteria growth, having no deteriorating effect on PVC or rubber gaskets.

G. Do not use PVC in potentially or known contaminated areas.

H. Do not use PVC in areas exposed to direct sunlight.

2.02 WATER SERVICE PIPE

A. Pipe 4 inch through 12 inch: AWWA C 900, AWWA C 909, Class 150, DR 18; AWWA C 900, Class 200, DR 14 as alternate to offset pipe sections; nominal 20-foot lengths; cast-iron equivalent outside diameters.

B. Pipe 14 inch through 20 inch: AWWA C 905; Class 235; DR 18; nominal 20-foot lengths; cast-iron equivalent outside diameter.

C. Provide Polyvinyl Chloride Pipe from approved manufacturers.

D. Make curves and bends by deflecting joints. Do not exceed maximum deflection recommended by pipe manufacturer. Submit details of other methods of providing curves and bends for review by Project Manager.

E. Hydrostatic Test: AWWA C 900, AWWA C 905, AWWA C 909, ANSI A 21.10 (AWWA C 110); at point of manufacture; submit manufacturer's written certification.

2.03 GRAVITY SEWER PIPE

A. PVC gravity sanitary sewer pipe and storm sewer pipe shall be in accordance with provisions in following table:

WALL CONSTRUCTION	MANUFACTURER	ASTM DESIGNATION	SDR (MAX.)/ STIFFNESS (MIN.)	DIAMETER SIZE RANGE
Solid	J-M Pipe Certain Teed Diamond Uponor ETI North American	D3034	SDR 26 / PS 115	6” to 10”
		D3034	SDR 35 / PS 46	12” & 15”
		F679	SDR 35 / PS 46	18” to 27”
		AWWA C900	DR 18 / N/A	4” to 12”
		AWWA C909	DR 18 / N/A	4” to 12”
		AWWA C905	DR 18 / N/A	14” to 16”
Truss (Gasketed)	Contech	D2680	N/A / 200 psi	8” to 15”
Profile	Contech A-2000	F949	N/A / 46 psi	12” to 36”
	Contech A-2026	F949	N/A / 115 psi	8” to 10”
	ETI, Utra-Rib	F794	N/A / 46 psi	8” to 30”
	EIT, Ultra-Corr	F794	N/A / 46 psi	24” to 36”

B. When solid wall PVC pipe 18 inches to 27 inches in diameter is required in SDR 26, provide pipe conforming to ASTM F 679, except provide wall thickness as required for SDR 26 and pipe strength of 115 psi.

C. For sewers up to 12-inch diameter crossing over water lines, or crossing under water lines with less than 2-feet separation, provide minimum 150 psi pressure-rated pipe conforming to ASTM D 2241 with suitable PVC adapter couplings.

D. Joints: Spigot and integral wall section bell with solid cross section elastomeric or rubber ring gasket conforming to requirements of ASTM D 3212 and ASTM F 477, or ASTM D 3139 and ASTM F 477. Gaskets shall be factory-assembled and securely bonded in place to prevent displacement. Manufacturer shall test sample from each batch conforming to requirements ASTM D 2444.

E. Fittings: Provide PVC gravity sewer sanitary bends, tee, or wye fittings for new sanitary sewer construction. PVC pipe fittings shall be full-bodied, either injection molded or factory fabricated. Saddle-type tee or wye fittings are not acceptable.

F. Conditioning. Conditioning of samples prior to and during tests is subject to approval by Project Manager. When referee tests are required, condition specimens in accordance with Procedure A in ASTM D 618 at 73.4 degrees F plus or minus 3.6 degrees F and 50 percent relative humidity plus or minus 5 percent relative humidity for not less than 40 hours prior to test. Conduct tests under same conditions of temperature and humidity unless otherwise specified.

G. Pipe Stiffness. Determine pipe stiffness at 5 percent deflection in accordance with Test Method D 2412. Minimum pipe stiffness shall be 46 psi. For diameters 4 inches through 18 inches, test three specimens, each a minimum of 6 inches (152 mm) in length. For diameters 21 inch through 36 inch, test three specimens, each a minimum of 12 inch (305 mm) in length.

H. Flattening. Flatten three specimens of pipe, prepared in accordance with Paragraph 2.04F, in suitable press until internal diameter has been reduced to 60 percent of original inside diameter of pipe. Rate of loading shall be uniform. Test specimens, when examined under normal light and with unaided eye, shall show no evidence of splitting, cracking, breaking, or separation of pipe walls or bracing profiles. Perform the flattening test in conjunction with pipe stiffness test.

I. Joint Tightness. Test for joint tightness in accordance with ASTM D 3212, except that joint shall remain watertight at minimum deflection of 5 percent. Manufacturer will be required to provide independent third party certification for joint testing each diameter of storm sewer pipe.

J. Purpose of Tests. Flattening and pipe stiffness tests are intended to be routine quality control tests. Joint tightness test is intended to qualify pipe to specified level of performance.

2.04 SANITARY SEWER FORCE MAIN PIPE

A. Provide approved PVC pressure pipe conforming to requirements for water service pipe, and conforming to minimum working pressure rating specified in Section 02532 - Sanitary Sewage Force Mains.

B. Acceptable pipe joints are integral bell-and-spigot, containing a bonded-in elastomeric sealing ring meeting requirements of ASTM F 477. In designated areas requiring restrained joint pipe and fittings, use approved joint restraint device conforming to UNI-B-13, for PVC pipe 12-inch diameter and less.

C. Fittings: Provide approved ductile iron fittings as per Section 02501 - Ductile Iron Pipe and Fittings, Paragraph 2.04, except furnish fittings with one of following approved internal linings: 1. Nominal 40 mils (35 mils minimum) virgin polyethylene complying with ASTM D 1248, heat fused to interior surface of fitting 2. Nominal 40 mils (35 mils minimum) polyurethane 3. Nominal 40 mils (35 mils minimum) ceramic epoxy 4. Nominal 40 mils (35 mils minimum) fusion bonded epoxy

D. Exterior Protection: Provide polyethylene wrapping of ductile-iron fittings as required by Section 02528 - Polyethylene Wrap.

E. Hydrostatic Tests: Hydrostatically test pressure rated pipe in accordance with Paragraph 2.02E.

2.05 BENDS AND FITTINGS FOR PVC PRESSURE PIPE

A. Bends and Fittings: ANSI A 21.10 or ANSI A 21.53, ductile iron; ANSI A 21.11 single rubber gasket push-on type joint; minimum 150 psi pressure rating. Approved restrained joints, 250 200 psi, may be provided for up to 12 inches in diameter (water or sanitary).

B. Provide approved restrained joint fittings: Integral restrained joint fittings and pipe do not require secondary restraint.

PART 3 E X E C U T I O N

3.01 PROTECTION

A. Store pipe under cover out of direct sunlight and protect from excessive heat or harmful chemicals in accordance with manufacturer's recommendations.

3.02 INSTALLATION

A. Conform to requirements of Section 02511 - Water Lines, Section 02531 - Gravity Sanitary Sewers, and Section 02532 - Sanitary Sewer Force Mains, as applicable.

B. Install PVC pipe in accordance with Section 02317 - Excavation and Backfill for Utilities, ASTM D 2321 for Sewer Pipe, and manufacturer's recommendations.

C. Install PVC water service pipe to clear utility lines and have minimum depth of cover below property line grade of street, unless otherwise required by Drawings:

1. Water service pipe 12 inches in diameter and smaller 4 feet of cover.

2. Water service pipe 16 inches in diameter and larger 5 feet of cover.

D. Avoid imposing strains that will overstress or buckle pipe when lowering pipe into trench.

E. Hand shovel pipe bedding under pipe haunches and along sides of pipe barrel and compact to eliminate voids and ensure side support.

F. Store PVC pipe under cover out of direct sunlight. Protect pipe from excessive heat or harmful chemicals. Prevent damage by crushing or piercing.

G. Allow PVC pipe to cool to ground temperature before backfilling when assembled out of trench to prevent pullout due to thermal contraction.

3.03 PVC RESTRAINED MECHANISM

A. Do not apply lubricant to spline or pipe or coupling spline grooves.

B. Do not use excessive force while inserting the spline through coupling.

C. Insert spline until it is fully seated around circumference of pipe.

D. Field Cutting of Pipe Ends:

1. Perform by workers certified by manufacturer.

2. Use a PVC pipe cutter and provide square ends.

3. Use manufacturer approved power routing and grooving tool to field fabricate required pipe groove.

END OF SECTION

Section 02511

WATER LINES

PART 1 G E N E R A L

1.01 SECTION INCLUDES

A. Installation of water lines.

B. Specifications identify requirements for both small diameter water lines and large diameter water lines. When specifications for large diameter water lines differ from those for small diameter water lines, large diameter specifications will govern for large diameter pipe.

1.02 MEASUREMENT AND PAYMENT

A. Unit Prices.

1. Payment for water lines installed by open-cut, trenchless construction with or without casing, aerial crossing, and pipe offset section or within limits of Potentially Petroleum Contaminated Area (PPCA) is on linear foot basis for each size of pipe installed. Separate pay items are used for each type of installation:

a. Mains: Measure along axis of pipe and include fittings and valves.

b. Branch Pipe: Measure from axis of water line to end of branch.

2. Payment for interconnection is on lump sum basis for each interconnection identified on Drawings. Payment will include tapping sleeve and valves piping, connections and other related work necessary for construction as shown on Drawings or specified herein.

3. Payment for removal of existing internal elliptical or dished head plug is on unit price basis for each internal elliptical or dished head plug removed. Payment will include deletion of plug, drainage or dewatering of water lines, repair of damaged linings, rechlorination and items incidental to operation.

4. Payment for plug and clamp is on a unit price basis for each size of pipe.

5. Payment for drainline connection with service manhole is on unit price basis for each drainline shown on drawings. Payment includes valve, access manhole and connection.

6. Payment for cylindrical corrosion barriers is on a unit price basis for each pipe fitting installed with one or more barriers.

7. When directed by Project Manager to install extra fittings as required to avoid

unforeseen obstacles, payment will be based on the following:

a. Each extra fitting requested by Project Manager and delivered to jobsite will be paid according to unit price for "Extra Fittings in Place."

b. Payment will include and be full compensation for items necessary for installation and operation of water line.

8. Payment for pipe support structure, including pipe guards will be paid on a lump sum basis for each aerial crossings. Payment includes related work performed in accordance with related Sections.

9. No separate payment will be made for pavement removal and replacement of surface improvement necessary for augering, tunneling, or other trenchless methods of installation, unless shown on drawings.

10. Refer to Section 01270 - Measurement and Payment for unit price procedures.

B. Stipulated Price (Lump Sum). If Contract is Stipulated Price Contract, payment for work in this Section is included in total Stipulated Price.

1.03 REFERENCES

A. ANSI A 21.11/AWWA C111 - Standard for Rubber-Gasket Joints for Ductile - Iron Pressure Pipe and Fittings.

B. ANSI/NSF Standard 61 - Drinking Water System -Health Components.

C. ASTM A 36 - Standard Specification for Carbon Structural Steel

D. ASTM A 536 - Standard Specification for Ductile Iron Castings

E. ASTM A 126 - Standard Specification for Gray Iron Castings for Valves, Flanges, and Pipe Fittings.

F. ASTM B 21 - Standard Specification for Naval Brass Rod, Bar, and Shapes.

G. ASTM B 98 - Standard Specification for Copper-Silicon Alloy Rod, Bar, and Shapes.

H. ASTM B 301 - Standard Specification for Free-Cutting Copper Rod and Bar.

I. ASTM B 584 - Standard Specification for Copper Alloy Sand Casting for General Application.

J. ASTM E 165 - Standard Test Method for Liquid Penetrant Examination

K. ASTM E 709 - Standard Guide for Magnetic Particle Examination

L. ASTM F 1674 - Standard Test Method for Joint Restraint Products for Use with PVC Pipe.

M. AWWA C 206 - Standard for Field Welding of Steel Water Pipe.

N. AWWA C 207 - Standard for Steel Pipe Flanges for Waterworks Service - Sizes 4 Inches through 144 Inches.

1.04 SUBMITTALS

A. Conform to requirements of Section 01330 - Submittal Procedures.

B. Conform to submittal requirements of applicable Section for type of pipe used.

C. Photographs: Submit photographs conforming to requirements of Section 01321 – Construction Photographs prior to commencement of construction.

D. Submit Lone Star notification transmittal number prior to beginning excavation.

E. Submit, a minimum of 15 days before beginning pipe laying operations, layout drawing identifying proposed sections for disinfecting, hydrostatic testing and site restoration for entire project for review and approval. Layout drawing to identify sequence of sections for:

1. Disinfection according to the following criteria:

   a. 2,000 linear feet for small diameter pipelines (20-inches in diameters or smaller)

   b. 4,000 linear feet for large diameter pipelines (24-inches in diameters or larger)

2. Hydrostatic testing and transfer of services; to immediately follow sequence of disinfected section.

3. Site restoration; not to exceed limits specified; Sequence in order of disturbance.

F. For pipe with bell-and-spigot ends with rubber gasket, submit complete joint details with dimensions and tolerances and performance history indicating the proposed joint has performed satisfactorily under similar conditions.

PART 2 P R O D U C T S

2.01 PIPE MATERIALS

A. Install pipe materials which conform to following:

1. Section 02501 - Ductile Iron Pipe and Fittings.

2. Section 02502 - Steel Pipe and Fittings. Water line piping within plant site and aerial crossings to be welded joint steel pipe with flange or approved restraint joint connections, unless otherwise shown on Drawings.

3. Section 02506 - Polyvinyl Chloride Pipe.

4. Section 02507 - Prestressed Concrete Cylinder Pipe.

5. Section 02518 - Steel Pipe and Fittings for Large Diameter Water Lines.

6. Section 02613 - Bar-Wrapped Steel Cylinder Pipe.

B. Conform to American National Standards Institute/National Sanitation Foundation (ANSI/NSF) Standard 61 and have certified by an organization accredited by ANSI.

C. Type of pipe materials used is Contractor's option unless specifically identified on Drawings.

D. Provide minimum of 3/8 inch inside joint recess between ends of pipe in straight pipe sections.

E. Pipe Manufacturer: Performance history shall be minimum 5 years of successful field installations with proposed pipe diameter and proposed type of pipe joint. In absence of 5-year performance history for proposed pipe diameter, the following items shall be required for review by Project Manager prior to approval:

1. Quality Assurance Program: Submit certified quality assurance program addressing all aspects of pipe manufacturing process, including coating and lining applications. Certified program shall be ISO 9001; 2000 or other equivalent industry standard nationally recognized program.

2. Hydrostatic Joint Test: Perform hydrostatic test of proposed joint at proposed pipe diameter in presence of Project Manager. Test duration shall be minimum 8 hours at 150 psi with no leakage, with pipe cylinder deflected at joint to 3% of nominal diameter, with maximum allowable joint engagement deflection.

3. Provide minimum four (4) weeks notice to Project Manager for hydrostatic joint test. Submit test procedures to Project Manager for approval.

Project Manager’s decision as to acceptability of joint is final.

2.02 WELDED JOINT PROTECTION FITTING FOR SMALL DIAMETER STEEL PIPE

A. Cylindrical Corrosion Barrier: Provide approved cylindrical corrosion barrier.

B. O-rings: Conform to National Sanitary Foundation requirements.

2.03 RESTRAINED JOINTS

A. Ductile-Iron Pipe: See Section 02501 - Ductile Iron Pipe and Fittings.

B. PVC Pipe: See Section 02506 - Polyvinyl Chloride Pipe. Perform hydrostatic testing in accordance with ASTM F 1674.

C. Prestressed Concrete Cylinder Pipe, Bar-Wrapped Pipe and Steel Pipe: Welded joints (see Paragraph 3.06 D).

D. Restrained Joints where required on DIP and PVC pipe is allowed with the following requirement as an alternative to the pipe with an integral restrained joint systems:

1. Restraint devices: Manufacture of high strength ductile iron, ASTM A 536 up to 24 inches, and ASTM A 36 for sizes greater than 30 inches. Working pressure rating twice that of design test pressure.

2. Bolts and connecting hardware: High strength low alloy material in accordance with ANSI A21.11/AWWA C111.

E. Ductile Iron Pipe in auger holes must be provided with integral restrained joints at both the bell and the spigot.

2.04 COUPLINGS AND APPURTENANCES FOR LARGE DIAMETER WATERLINE

A. Flexible (Dresser-type) Couplings.

1. Install where shown on Drawings or where allowed by Project Manager for Contractor's convenience. Use galvanized flexible couplings when installed on galvanized pipe which is cement lined, or when underground. Provide gaskets manufactured from Neoprene or Buna-N.

2. For steel pipe; provide approved sleeve-type flexible couplings. Thickness of middle ring equal to or greater than thickness of pipe wall.

3. Provide approved flanged adapter couplings for steel pipe

4. Use Type 316 stainless steel bolts, nuts and washers where flexible couplings are installed underground. Coat entire coupling with 20-mil of approved coal tar coating.

B. Flap Valves: Provide approved flap valves on discharge of manhole drainline as shown on Drawings.

1. Body and Flap: ASTM A 126-B cast iron.

2. Seats: ASTM B 21-CA482 or ASTM B 301-CA145 bronze.

3. Resilient Seat:

4. Hinge Arms: ASTM B 584-CA865 high tensile bronze.

5. Hinge pins: ASTM B 98-CA655 silicon bronze.

PART 3 E X E C U T I O N

3.01 PREPARATION

A. Conform to applicable installation specifications for types of pipe used.

B. Employ workmen who are skilled and experienced in laying pipe of type and joint configuration being furnished. Provide watertight pipe and pipe joints.

C. Lay pipe to lines and grades shown on Drawings.

D. Confirm that nine feet minimum separation from gravity sanitary sewers and manholes or separation of four feet minimum from force mains as specified in this Section in all directions unless special design is provided on Drawings.

E. Where above clearances cannot be attained, and special design has not been provided on Drawings, obtain direction from Project Manager before proceeding with construction.

F. Inform Project Manager if unmetered sprinkler or fire line connections exist which are not shown on Drawings. Make transfer only after approval by Project Manager.

G. For projects involving multiple subdivisions or locations, limit water line installation to maximum of two project site locations. Maximizing 2 pipe installation crews shall be permitted, unless otherwise approved by Project Manager.

H. City of Houston Utility Operations Division will handle, at no cost to Contractor, operations involving opening and closing valves for wet connections and for chlorination. Contractor is responsible for handling necessary installations and removal of chlorination and testing taps and risers.

I. If asbestos-cement (A.C.) pipe is encountered, follow safety practices outlined in American Water Works Association's publication, "Work Practices for A/C Pipe". Strictly adhere to "recommended practices" contained in this publication and make them "mandatory practices" for this Project.

J. For pipe diameters 36 inches and greater, clearly mark each section of pipe and fitting with unique designation on inside of pipe along with pressure class. Locate unique identifying mark minimum of five feet away from either end of each section of pipe. Provide one unique identifying mark in middle of each fitting. Place markings at consistent locations. Use permanent black paint and minimum letter height of 4 inches to mark designations.

K. Contractor is responsible for assuring chosen manufacturer fulfills requirements for extra fittings and, therefore, is responsible for costs due to downtime if requirements are not met.

L. Do not remove plugs or clamps during months of peak water demands; June, July and August, unless otherwise approved by Project Manager.

3.02 HANDLING, CLEANING AND INSPECTION

A. Handling:

1. Place pipe along project site where storm water or other water will not enter or pass through pipe.

2. Load, transport, unload, and otherwise handle pipe and fittings to prevent damage of any kind. Handle and transport pipe with equipment designed, constructed and arranged to prevent damage to pipe, lining and coating. Do not permit bare chains, hooks, metal bars, or narrow skids or cradles to come in contact with coatings. Where required, provide pipe fittings with sufficient interior strutting or cross bracing to prevent deflection under their own weight.

3. Hoist pipe from trench side into trench by means of sling of smooth steel cable, canvas, leather, nylon or similar material.

4. For large diameter water lines, handle pipe only by means of sling of canvas, leather, nylon, or similar material. Sling shall be minimum 36 inches in width. Do not tear or wrinkle tape layers.

5. Use precautions to prevent injury to pipe, protective linings and coatings.

   a. Package stacked pipe on timbers. Place protective pads under banding straps at time of packaging.

   b. Pad fork trucks with carpet or other suitable material. Use nylon straps around pipe for lift when relocating pipe with crane or backhoe.

   c. Do not lift pipe using hooks at each end of pipe.

   d. Do not place debris, tools, clothing, or other materials on pipe.

6. Repair damage to pipe or protective lining and coating before final acceptance.

7. For cement mortar line and coated steel pipe, permit no visible cracks longer than 6 inches, measured within 15 degrees of line parallel to pipe longitudinal axis of finished pipe, except:

   a. In surface laitance of centrifugally cast concrete.

   b. In sections of pipe with steel reinforcing collars or wrappers.

c. Within 12 inches of pipe ends.

8. Reject pipe with visible cracks (not meeting exceptions) and remove from project site.

B. Cleaning: Thoroughly clean and dry interior of pipe and fittings of foreign matter before installation, and keep interior clean until Work has been accepted. Keep joint contact surfaces clean until jointing is completed. Do not place debris, tools, clothing or other materials in pipe. After pipe laying and joining operations are completed, clean inside of pipe and remove debris.

C. Inspection: Before installation, inspect each pipe and fitting for defects. Reject defective, damaged or unsound pipe and fittings and remove them from site.

3.03 EARTHWORK

A. Conform to applicable provisions of Section 02317 - Excavation and Backfilling for Utilities and Section 02447 - Augering Pipe and Conduit.

B. Bedding: Use bedding materials in conformance with Section 02320 - Utility Backfill Materials.

C. Backfill: Use bank run sand or earth or native soil as specified in Section 02320 - Utility Backfill Materials. Backfill excavated areas in same day excavated. When not possible, cover excavated areas using steel plates on paved areas and other protective measures elsewhere.

D. Place material in uniform layers of prescribed maximum loose thickness and wet or dry material to approximately optimum moisture content. Compact to prescribed density Water tamping is not allowed.

E. Pipe Embedment: Including 6-inch pipe bedding and backfill to 12 inches above top of pipe.

3.04 PIPE CUTTING

A. Cut pipe 12 inches and smaller with standard wheel pipe cutters. Cut pipe larger than 12 inches in manner approved by Project Manager. Make cuts smooth and at right angles to axis of pipe. Bevel plain end with heavy file or grinder to remove sharp edges.

3.05 PIPING INSTALLATION

A. General Requirements:

1. Lay pipe in subgrade free of water.

2. Make adjustments of pipe to line and grade by scraping away subgrade or filling in with granular material.

3. Properly form bedding to fully support bell without wedging or blocking up bell.

4. Open Cut Construction: Keep pipe trenches free of water which might impair pipe laying operations. Grade trench to provide uniform support along bottom of pipe. Excavate for bell holes after bottom has been graded and in advance of placing pipe. Lay not more than nominal city block length of not more than 300 feet of pipe in trench ahead of backfilling operations. Cover or backfill laid pipe if pipe laying operations are interrupted and during non-working hours. Place backfill carefully and simultaneously on each side of pipe to avoid lateral displacement of pipe and damage to joints. If adjustment of pipe is required after it has been laid, remove and re-lay as new pipe.

B. Install pipe continuously and uninterrupted along each street on which work is to be performed. Obtain approval of Project Manager prior to skipping any portion of Work.

C. Protection of Pipeline: Securely place stoppers or bulkheads in openings and in end of line when construction is stopped temporarily and at end of each day's work.

D. Perform Critical Location as shown on Drawings. Refer to Section 02317 - Excavation and Backfill for Utilities for additional requirements at critical locations.

E. Laying Large Diameter Water Line

1. Lay not more than 50 feet of pipe in trench ahead of backfilling operations.

2. Dig trench proper width as shown. When trench width below top of pipe becomes 4 feet wider than specified, install higher class of pipe or improved bedding, as determined by Project Manager. No additional payment will be made for higher class of pipe or improved bedding.

3. Use adequate surveying methods and equipment; employ personnel competent in use of this equipment. Horizontal and vertical deviations from alignment as indicated on Drawings shall not exceed 0.10 feet. Measure and record "as-built" horizontal alignment and vertical grade at maximum of every 100 feet on record drawings.

4. Prevent damage to coating when placing backfill. Use backfill material free of large rocks or stones, or other material which could damage coatings.

5. Before assembling couplings, lightly coat pipe ends and outside of gaskets with cup grease or liquid vegetable soap to facilitate installation.

6. Prior to proceeding with critical tie-ins submit sequence of work based on findings from "critical location" effort.

F. Perform following additional procedures when working on plant sites.

1. Seventy-two hours prior to each plant shut down or connection, schedule coordination meeting with Project Manager and Water Production personnel. At this meeting, present proposed sequencing of Work and verification of readiness to complete Work as required and within time permitted. Do not proceed with Work until Project Manager agrees key personnel, equipment and materials are on hand to complete Work.

2. Prior to fully excavating around existing piping, excavate as minimal as possible to confirm type and condition of existing joints. Verify size, type, and condition of pipe prior to ordering materials or fully mobilizing for Work.

3. Do not proceed with connections to existing piping and identified critical stages of work unless approved by Project Manager and City's Utility Maintenance Division operator is present to observe.

4. Coordinate with Public Utilities Division (PUD) operators to obtain reduction in operating pressures prior to performing connections to existing piping.

5. Make connections to existing piping only when two valves are closed off between connection and source of water pressure. Do not make connection relying solely on one valve, unless otherwise approved by Project Manager.

6. Perform critical stages of Work identified on Drawings at night or during low water demand months as specified in Section 01110 - Summary of Work.

7. Excavation equipment used on plant sites to have smooth bucket; no teeth or side cutters.

8. Submit to Project Manager Lone Star Notification transmittal number prior to beginning excavation.

9. Before each "dig" with mechanical excavator, probe ground to determine potential obstructions. Repeat procedure until existing pipe is located or excavation reaches desired elevation. Perform excavations within one foot to existing piping by hand methods.

10. Provide adequate notice to pipe manufacture's representative when connecting or modifying existing prestressed or pretension concrete cylinder pipe.

11. Provide field surveyed (horizontal and vertical elevations) "as-builts" of new construction and existing underground utilities encountered. Submit in accordance with Section 01330 - Submittal Procedures.

12. Prior to performing plant work to be done on weekend, provide list of sites and contact person with phone numbers to Project Manager by noon on Thursday of week. Contact person must be accessible during weekend, have Houston Metro Area phone number, and be authorized to make emergency decisions.

13. No night work or plant shut down will be scheduled to begin two working days before or after designated City Holidays.

G. For tie-ins to existing water lines, provide necessary material on hand to facilitate connection prior to shutting down existing water line. Provide City a minimum of two weeks notice prior to shutting down existing water line.

3.06 JOINTS AND JOINTING

A. Rubber Gasketed Bell-and-Spigot Joints for Concrete Cylinder Pipe, Bar Wrapped Pipe PVC, Steel, and DIP:

1. After rubber gasket is placed in spigot groove of pipe, equalize rubber gasket cross section by inserting tool or bar recommended by manufacturer under rubber gasket and moving it around periphery of pipe spigot.

2. Lubricate gaskets with nontoxic water-soluble lubricant before pipe units are joined.

3. Fit pipe units together in manner to avoid twisting or otherwise displacing or damaging rubber gasket.

4. After pipe sections are joined, check gaskets to ensure that no displacement of gasket has occurred. If displacement has occurred, remove pipe section and remake joint as for new pipe. Remove old gasket, inspect for damage and replace if necessary before remaking joint.

5. Where preventing movement of 16-inch diameter or greater pipe is necessary due to thrust, use restrained joints as shown on Drawings.

   a. Include buoyancy conditions for soil unit weight when computing thrust restraint calculations.

   b. Do not include passive resistance of soil in thrust restraint calculations.

6. Except for PVC pipe, provide means to prevent full engagement of spigot into bell as shown on Drawings. Means may consist of wedges or other types of stops as approved by Project Manager.
7. Use feeler gauge to verify water-tightness of each pipe joint prior to application of joint grout. Perform feeler gauge test from interior of pipe, immediately after installation and after backfilling and compaction. Perform feeler gauge test in accordance with manufacturer's recommendations to determine if the joint is within tolerance. Provide results to Project Manager. Notify Project Manager immediately when a joint is found to be out of tolerance or fails feeler gauge test, and submit repair plan for approval by Project Manager.

B. Flanged Joints where required on Concrete Cylinder Pipe, Bar Wrapped Pipe, Ductile Iron Pipe, or Steel Pipe:

1. AWWA C 207. Prior to installation of bolts, accurately center and align flanged joints to prevent mechanical prestressing of flanges, pipe and equipment. Align bolt holes to straddle vertical, horizontal or north-south center line. Do not exceed 3/64 inch per foot inclination of flange face from true alignment.

2. Use full-face gaskets for flanged joints. Provide 1/8-inch-thick cloth inserted rubber gasket material. Cut gaskets at factory to proper dimensions.

3. Use galvanized or black nuts and bolts to match flange material. Use cadmium-plated steel nuts and bolts underground. Tighten bolts progressively to prevent unbalanced stress. Maintain at all times approximately same distance between two flanges at points around flanges. Tighten bolts alternately (180° apart) until all are evenly tight. Draw bolts tight to ensure proper seating of gaskets. Provide Densco petroleum based tape or approved equal for all exposed portions of nuts, bolts and pipe.

4. Full length bolt isolating sleeves and washers shall be used with flanged connections. Furnish kits in accordance with City's "Approved Products List."

5. For in-line flange joints 30 inches in diameter and greater and at butterfly valve flanges, provide Pyrox G-10 with nitrite seal, conforming to ANSI A 21.11 mechanical joint gaskets. For in-line flange joints sized between 12 inches in diameter and greater and 24 inches in diameter and smaller, provide Phenolic PSI with nitrite seal gasket conforming to ANSI A 21.11 mechanical joint gaskets.

C. Welded Joints (Concrete Cylinder Pipe, Bar Wrapped Pipe, Steel Pipe):

1. Prior to starting work, provide certification of qualification for welders employed on project for type of work procedures and positions involved.

2. Joints: AWWA C 206. Full-fillet, single lap-welded slip-type either inside or outside, or double butt-welded type; use automatic or hand welders; completely penetrate deposited metal with base metal; use filler metal compatible with base metal; keep inside of fittings and joints free from globules of weld metal which would restrict flow or become loose. Do not use mitered joints. For interior welded joints, complete backfilling before welding. For exterior field-welded joints, provide adequate working room under and beside pipe. Use exterior welds for 30-inch and smaller.

3. Furnish welded joints with trimmed spigots and interior welds for 36-inch and larger pipe.

4. Bell-and-spigot, lap-welded slip joints: Deflection may be taken at joint by pulling joint up to 3/4 inch as long as 1 1/2 inch minimum lap is maintained. Spigot end may be miter cut to take deflections up to 5 degrees as long as joint tolerances are maintained. Miter end cuts of both ends of butt-welded joints

may be used for joint deflections of up to 5 degrees.

5. Align piping and equipment so that no part is offset more than 1/8 inch. Set fittings and joints square and true, and preserve alignment during welding operation. For butt welded joints, align abutting ends to minimize offset between surfaces. For pipe of same nominal wall thickness, do not exceed 1/16 inch offset. Use line-up clamps for this purpose; however, take care to avoid damage to linings and coatings.

6. Protect coal-tar-epoxy lining during welding by draping an 18-inch-wide strip of heat resistant material over top half of pipe on each side of lining holdback to avoid damage to lining by hot splatter. Protect tape coating similarly if external welding is required.

7. Welding rods: Compatible with metal to be welded to obtain strongest bond, E-70XX.

8. Deposit metal in successive layers to provide at least 2 passes or beads for automatic welding and 3 passes or beads for manual welding in completed weld.

9. Deposit no more than 1/4 inch of metal on each pass. Thoroughly clean each individual pass with wire brush or hammer to remove dirt, slag or flux.

10. Do not weld under weather condition that would impair strength of weld, such as wet surface, rain or snow, dust or high winds, unless work is properly protected.

11. Make tack weld of same material and by same procedure as completed weld. Otherwise, remove tack welds during welding operation.

12. Remove dirt, scale, and other foreign matter from inside piping before tying in sections, fittings, or valves.

13. Welded Joints for Large Diameter Water Lines:

    a. Furnish pipe with trimmed spigots and interior welds for 36-inch and larger pipe.

    b. Use exterior welds for 30 inch and smaller.

    c. Only one end may be miter cut. Miter end cuts of both ends of butt-welded joints may be used for joint deflections of up to 2 1/2 degrees.

    d. For large diameter water lines, employ an independent certified testing laboratory, approved by Project Manager, to perform weld acceptance tests on welded joints. Include cost of such testing and associated work to accommodate testing in contract unit price bid for water line. Furnish copies of test reports to Project Manager for review. Project

Manager has final decision as to suitability of welds tested.

1) Weld acceptance criteria:

a) Conduct in accordance with ASTM E165- Standard Test Method for Liquid Penetrant Examination and ASTM E709 Standard Guide for Magnetic Particle Examination. Use X-ray methods for butt welds, for 100 percent of joint welds.

b) Examine welded surfaces for the following defects:

i) Cracking.
i i) Lack of fusion/penetration.
i i i) Slag which exceeds one-third (t) where (t) equals material thickness.
i v) Porosity/Relevant rounded indications greater than 3/16 inch; rounded indication is one of circular or elliptical shape with length equal to or less than three times its width.
v) Relevant linear indications in which length of linear indication exceeds three times its width.
v i) Four or more relevant 1/16-inch rounded indications in line separated by 1/16 inch or less edge to edge.

14. After pipe is joined and prior to start of welding procedure, make spigot and bell essentially concentric by jacking, shimming or tacking to obtain clearance tolerance around periphery of joint except for deflected joints.

15. Furnish each welder employed steel stencil for marking welds, so work of each welder can be identified. Mark pipe with assigned stencil adjacent to weld. When welder leaves job, stencil must be voided and not duplicated. Welder making defective welds must discontinue work and leave project site. Welder may return to project site only after recertification.

16. Provide cylindrical corrosion barriers for epoxy lined steel pipe 24-inch diameter and smaller, unless minimum wall thickness is 0.5 inches or greater.

a. In addition to welding requirements contained here in Paragraph 3.06, conform to protection fitting manufacturer's installation recommendations.

b. Provide services of technical representative of manufacturer available on site at beginning of pipe laying operations. Representative to train welders and advise regarding installation and general construction methods. Welders must have 12 months prior experience installing protection fittings.

c. All steel pipe is to have cutback 3/4 inch to no greater than 1 inch of internal diameter coating from weld bevel.

d. Furnish steel fittings with cylindrical corrosion barriers with shop welded extensions to end of fittings. Extension length to measure no less than diameter of pipe. Shop apply lining in accordance with AWWA C 210 or AWWA C 213.

e. All steel pipe receiving field adjustments are to be cold cut using standard practices and equipment. No cutting using torch is to be allowed.

D. Harnessed Joints (Concrete Cylinder Pipe, Bar Wrapped Pipe):

1. Use of snap-ring type restrained joints on pipe is limited to 20-inch through 48-inch diameters.

2. Position snap-ring joint bolt on top (12 o'clock portion). Provide minimum 1/2-inch joint recess. Use joint "diapers" minimum of 12 inches wide.

3. For field adjustments with deflections beyond manufacturer's recommendations:

a. Field trim spigot.

b. Do not engage ring.

4. Harnessed joints are not permitted in areas defined on Drawings as potentially petroleum contaminated material, in tunnels, or at bend greater than 5 degrees.

5. Install harness type joints including snap rings at straight sections of pipe.

E. Restrained Joints

1. For existing water lines and water lines less than 16 inches in diameter, restrain pipe joints with concrete thrust blocks.

2. Thrust restraint lengths shown on Drawings are minimum anticipated lengths. These lengths are based on deflections indicated and on use of prestressed concrete cylinder pipe for large diameter lines and ductile iron pipe for small diameter lines. Adjustments in deflections or use of other pipe material may result in reduction or increase of thrust lengths. Perform calculations by pipe manufacturer to verify proposed thrust restraint lengths. Submit calculations for all pipe materials sealed by a registered Professional Engineer in State of Texas for review by Project Manager. Make adjustments in thrust restraint lengths at no additional cost to City.

3. Passive resistance of soil will not be permitted in calculation of thrust restraint.

4. For 16-inch lines and larger use minimum 16-foot length of pipe in and out of joints made up of beveled pipe where restraint joint lengths are not identified

on Drawings. Otherwise, provide restraint joints for a minimum length of 16 feet on each side of beveled joints.

5. Installation.

   a. Install restrained joints mechanism in accordance with manufacturer's recommendations.

   b. Examine and clean mechanism; remove dirt, debris and other foreign material.

   c. Apply gasket and joint NSF 61 FDA food grade approved lubricant.

   d. Verify gasket is evenly seated.

   e. Do not over stab pipe into mechanism.

6. Prevent any lateral movement of thrust restraints throughout pressure testing and operation.

7. Place 2500 psi concrete conforming to Section 03315 - Concrete for Utility Construction, for blocking at each change in direction of existing water lines, to brace pipe against undisturbed trench walls. Finish placement of concrete blocking, made from Type I cement, 4 days prior to hydrostatic testing of pipeline. Test may be made 2 days after completion of blocking if Type II cement is used.

F. Joint Grout (Concrete Cylinder Pipe, Bar Wrapped Pipe, Steel Pipe):

1. Mix cement grout mixture by machine except when less than 1/2 cubic yard is required. When less than 1/2 cubic yard is required, grout may be hand mixed. Mix grout only in quantities for immediate use. Place grout within 20 minutes after mixing. Discard grout that has set. Retempering of grout by any means is not permitted.

2. Prepare grout in small batches to prevent stiffening before it is used. Do not use grout which has become so stiff that proper placement cannot be assured without retempering. Use grout for filling grooves of such consistency that it will adhere to ends of pipe.

3. Surface Preparation: Remove defective concrete, laitance, dirt, oil, grease and other foreign material from concrete surfaces with wire brush or hammer to sound, clean surface. Remove rust and foreign materials from metal surfaces in contact with grout.

4. Follow established procedures for hot and cold weather concrete placement.

5. Complete joint grout operations and backfilling of pipe trenches as closely as practical to pipe laying operations. Allow grouted exterior joints to cure at

least 1 hour before compacting backfill.

6. Grouting exterior joint space: Hold wrapper in place on both sides of joint with minimum 5/8-inch-wide steel straps or bands. Place no additional bedding or backfill material on either side of pipe until after grout band is filled and grout has mechanically stiffened. Pull ends of wrapper together at top of pipe to form access hole. Pour grout down one side of pipe until it rises on other side. Rod or puddle grout to ensure complete filling of joint recess. Agitate for 15 minutes to allow excess water to seep through joint band. When necessary, add more grout to fill joint completely. Protect gap at top of joint band from backfill by allowing grout to stiffen or by covering with structurally protective material. Do not remove band from joint. Proceed with placement of additional bedding and backfill material.

7. Interior Joints for Pipe 24 inches and Smaller: Circumferentially butter bell with grout prior to insertion of spigot, strike off flush surplus grout inside pipe by pulling filled burlap bag or inflated ball through pipe with rope. After joint is engaged, finish off joint grout smooth and clean. Use swab approved by Project Manager for 20-inch pipe and smaller.

8. Protect exposed interior surfaces of steel joint bands by metallizing, by other approved coatings, or by pointing with grout. Joint pointing may be omitted on potable water pipelines if joint bands are protected by zinc metallizing or other approved protective coatings.

9. Remove and replace improperly cured or otherwise defective grout.

10. Strike off grout on interior joints and make smooth with inside diameter of pipe.

11. When installed in tunnel or encasement pipe and clearance within casing does not permit outside grout to be placed in normal manner, apply approved flexible sealer, such as Flex Protex or equal, to outside joint prior to joint engagement. Clean and prime surfaces receiving sealer in accordance with manufacturer's recommendations. Apply sufficient quantities of sealer to assure complete protection of steel in joint area. Fill interior of joint with grout in normal manner after joint closure.

12. Interior Joints for Water Lines 30 inches and Larger: Clean joint space, wet joint surfaces, fill with stiff grout and trowel smooth and flush with inside surfaces of pipe using steel trowel so that surface is smooth. Accomplish grouting at end of each work day. Obtain written acceptance from Project Manager of inside joints before proceeding with next day's pipe laying operation. During inspection, insure no delamination of joint mortar has occurred by striking joint mortar lining with rubber mallet. Remove and replace delaminated mortar lining.

13. Work which requires heavy equipment to be over water line must be completed before mortar is applied to interior joints.

14. Do not apply grout to joints that are out of tolerance until acceptable repairs are made.

G. Large Diameter Water Main Joint Testing: In addition to testing individual joints with feeler gauge approximately 1/2 inch wide and 0.015-inch thick, use other joint testing procedure approved or recommended by pipe manufacturer which will help ensure watertight installation prior to backfilling. Perform tests at no additional cost to City.

H. Make curves and bends by deflecting joints or other method as recommended by manufacturer and approved by Project Manager. Submit details of other methods of providing curves and bends which exceed manufacturer's recommended deflection prior to installation.

1. Deflection of pipe joints shall not exceed maximum deflection recommended by pipe manufacturer, unless otherwise indicated on Drawings.

2. If deflection exceeds that specified but is less than 5 percent, repair entire deflected pipe section such that maximum deflection allowed is not exceeded.

3. If deflection is equal to or exceeds 5 percent from that specified, remove entire portion of deflected pipe section and install new pipe.

4. Replace, repair, or reapply coatings and linings as required.

5. Assessment of deflection may be measured by Project Manager at location along pipe. Arithmetical averages of deflection or similar average measurement methods will not be deemed as meeting intent of standard.

6. When rubber gasketed pipe is laid on curve, join pipe in straight alignment and then deflect to curved alignment.

I. Closures Sections and Approved Field Modifications to Steel, Concrete Cylinder Pipe, Bar Wrapped Pipe and Fittings:

1. Apply welded-wire fabric reinforcement to interior and exterior of exposed interior and exterior surfaces greater than 6 inches in diameter. Welded-wire fabric: minimum W1; maximum spacing 2 inches by 4 inches; 3/8 inch from surface of steel plate or middle third of lining or coating thickness for mortar thickness less than 3/4 inch.

2. Fill exposed interior and exterior surfaces with nonshrink grout.

3. For pipe diameters 36 inches and greater, perform field welds on interior and exterior of pipe.

4. For large diameter water lines, provide minimum overlap of 4 inches of butt strap over adjacent piece on butt-strap closures.

3.07 CATHODIC PROTECTION APPURTENANCES

A. Where identified on Drawings, modify pipe for cathodic protection as detailed on Drawings and specified. Unless otherwise noted, provide insulation kits including test stations at connections to existing water system or at locations to isolate one type of cathodic system from another type, between water line, access manhole piping and other major openings in water line, or as shown on Drawings.

B. Bond joints for pipe installed in tunnel or open cut, except where insulating flanges are provided. Weld strap or clip between bell and spigot of each joint or as shown on Drawings. No additional bonding required where joints are welded for thrust restraint. Repair coatings as specified by appropriate AWWA standard, as recommended by manufacturer, and as approved by Project Manager.

C. Bonding Strap or Clip: Free of foreign material that may increase contact resistance between wire and strap or clip.

3.08 SECURING, SUPPORTING AND ANCHORING

A. Support piping as shown on Drawings and as specified in this Section, to maintain line and grade and prevent transfer of stress to adjacent structures.

B. Where shown on Drawings, anchor pipe fittings and bends installed on water line by welding consecutive joints of pipe together to distance each side of fitting. Restrained length, as shown on Drawings, assumes that installation of pipe and subsequent hydrostatic testing begins upstream and proceed downstream, with respect to normal flow of water in pipe. If installation and testing differs from this assumption, submit for approval revised method of restraining pipe joints upstream and downstream of device used to test against (block valve, blind flange or dished head plug).

C. Use adequate temporary blocking of fittings when making connections to distribution system and during hydrostatic tests. Use sufficient anchorage and blocking to resist stresses and forces encountered while tapping existing water line.

3.09 POLYETHYLENE WRAP FOR DUCTILE IRON PIPE

A. Double wrap pipe and appurtenances (except fire hydrants and fusion bond or polyurethane coated fittings) with 8-mil polyethylene film.

B. Conform to requirements of Section 02528 - Polyethylene Wrap.

3.10 CLEANUP AND RESTORATION

A. Provide cleanup and restoration crews to work closely behind pipe laying crews, and where necessary, during disinfection and hydrostatic testing, service transfers, abandonment of old water lines, backfill and surface restoration.

B. Unless otherwise approved by Project Manager, comply with the following;

1. Once water line is installed to limits approved in layout submitted,

immediately begin preparatory work for disinfection effort.

2. No later than three days after completing disinfection preparatory work, submit to City appropriate request for disinfection.

3. If City fails to perform initial disinfection of lines in accordance with Section 2514 - Disinfection of Water Lines, within seven days from submission of appropriate request, and if approved by Project Manager, pipe laying operations may continue beyond approved limits until the City responds.

4. Immediately after transfer of services, begin abandonment of old water lines and site restoration.

5. Do not exceed a total of 50% of total project linear feet of disturbed right-of-way and easement until site is restored in accordance with Section 01740 - Site Restoration.

6. Exceeding any of the above footage limitations shall be considered a material breach of the Contract and subject to termination in accordance with the General Conditions.

C. For large diameter water lines, do not install more than 2,000 linear feet of water line, without previous 2,000 linear feet being restored in accordance with Section 01740 - Site Restoration. Schedule paving crews so repaving work will not lag behind pipe laying work by more than 1,000 linear feet. Failure to comply with this requirement shall be considered a material breach of the Contract and subject to termination in accordance with the General Conditions.

3.11 CLEANING PIPING SYSTEMS

A. Remove construction debris or foreign material and thoroughly broom clean and flush piping systems. Provide temporary connections, equipment and labor for cleaning. City must inspect water line for cleanliness prior to filling.

3.12 DISINFECTION OF WATER LINES

A. Conform to requirements of Section 02514 - Disinfection of Water Lines.

3.13 FIELD HYDROSTATIC TESTS

A. Conform to requirements of Section 02515 - Hydrostatic Testing of Pipelines.

END OF SECTION

Section 02512

WATER TAP AND SERVICE LINE INSTALLATION

PART 1 G E N E R A L

1.01 SECTION INCLUDES

A. Tapping existing mains and furnishing and installing new service lines for water.

B. Relocation of existing small water meters.

C. Specifications identify requirements for both small-diameter (less than or equal to 20 inches) water lines and large-diameter (greater than 20 inches) water lines. When specifications for large-diameter water lines differ from those for small- diameter water lines, paragraphs for large-diameter water lines will govern for large-diameter pipe.

1.02 MEASUREMENT AND PAYMENT

A. Unit Prices.

1. Payment for water taps and polyethylene service lines 3/4 inch through 1 inch is on unit price basis for each installation. Separate measurements will be made for "short side", "long side" and "extra long side" connections as defined in Paragraph 1.04, Definitions.

2. Payment for water taps and service lines 1 1/2 inch through 2 inch is on unit price basis for each installation. Separate measurements will be made for "short side", "long side" and "extra long side" connections as defined in Paragraph 1.04, Definitions.

3. Payment for "short side, "long side" and "extra long side" includes locating water line, tap installation and connection to meter and restoring site.

4. Payment for each small meter includes labor, materials, and equipment to relocate existing small meter.

5. No additional payment will be made for bedding, backfill, compaction, push under pavement, etc.

6. Refer to Section 01270 - Measurement and Payment for unit price procedures

B. Stipulated Price (Lump Sum). If Contract is Stipulated Price Contract, payment for work in this Section is included in total Stipulated Price.

1.03 REFERENCES

A. AWWA C 800 - Standard for Underground Service Line Valves and Fittings.

B. AWWA C 900 - Standard for Polyvinyl Chloride (PVC) Pressure Pipe, 4 in. Through 12 in., for Water Distribution.

C. AWWA C 901 – Polyethylene(PE) Pressure Pipe and Tubing, ½-Inch through 3-Inch for water service.

1.04 DEFINITIONS

A. Short Side Connection: Service line connecting proposed curb stop, located inside water meter box, to water line on same side of street.

B. Long Side Connection: Service line connecting proposed curb stop, located inside water meter box, to water line on opposite side of street or from center of streets where supply line is located in street center such as boulevards and streets with esplanades. Distance not to exceed 60 linear feet (at right angles to water line).

C. Extra Long Side Connection: Service line connecting proposed curb stop, located inside water meter box, to water line on opposite side of street or from center of streets where supply line is located in street center such as boulevards and streets with esplanades. Distance greater than 60 linear feet (at right angles to water line).

PART 2 P R O D U C T S

2.01 MATERIALS

A. Service Tubing: Polyethylene SDR 9, AWWA C-901 tubing should be used. Acceptable manufacturers include NuMex, Envot, and Vrisco Pipe.

B. Corporation Stops: AWWA C 800 as modified in this Section:

1. Inlet End: AWWA standard thread.

2. Valve Body: Tapered plug type, O-ring seat ball type, or rubber seat ball type.

3. Outlet End: Flared-copper connection for use with Type K, soft copper or compression type fitting.

C. Provide taps for water line types and sizes in accordance with pipe tapping schedule located at end of this Section.

D. Dual Strap Saddles: Red brass body and straps; ductile-iron; vinyl-coated body and straps; or ductile-iron, vinyl-coated body and stainless-steel straps.

E. Taps for PVC Water Lines: Use dual-strap or single, wide-band strap saddles which provide full support around circumference of pipe and bearing area of sufficient width

along axis of pipe, 2 inches minimum, ensuring that pipe will not be distorted when saddle is tightened. Provide approved stainless-steel tapping saddle with AWWA standard thread .

F. Taps for Steel Pipe: Not allowed, unless specifically approved by Project Manager. Use saddle only when tap is approved on steel pipe.

G. Curb Stops and Brass Fittings: AWWA C 800 as modified in this Section.

1. Inlet End: Flared copper connection or compression-type fitting

2. Valve Body: Straight-through or angled, meter-stop design equipped with following:

a. O-ring seal straight plug type.

b. Rubber seat ball type.

3. Outlet End: Female, iron-pipe thread or swivel-nut, meter-spud thread on 3/4-inch and 1-inch stops and 2-hole flange on 1 1/2 and 2-inch sizes.

4. Fittings: Provide approved fittings. Use same size open end wrenches and tapping machines as used with respective Mueller fittings.

5. Factory Testing of Brass Fittings:

a. Submerge in water for 10 seconds at 85 psi with stop in both closed and open positions.

b. Reject fitting that shows air leakage. Project Manager may confirm tests locally. Entire lot from which samples were taken will be rejected when random sampling discloses unsatisfactory fittings.

H. Angle Stops: In accordance with AWWA C 800; ground-key, stop type with bronze lock-wing head stop cap; inlet and outlet threads conform to application tables of AWWA C 800; and inlets flared connection or compression.

1. Outlet for 3/4-inch and 1-inch size: Meter swivel nut with saddle support.

2. Outlet for 1 1/2-inch through 2-inch size: O-ring sealed meter flange, iron pipe threads.

I. Fittings: In accordance with AWWA C 800 and AWWA C 901 and following:

1. Castings: Smooth, free from burrs, scales, blisters, sand holes, and defects which would make them unfit for intended use.

2. Nuts: Smooth cast and has symmetrical hexagonal wrench flats.

3. Flare-Joint Fittings: Smooth cast. Machine seating surfaces for metal-to-metal seal to proper taper or curve, free from pits or protrusions.

4. Thread fittings, of all types, shall have N.P.T. or AWWA threads, and protect male threaded ends in shipment by plastic coating, or approved equal.

5. Compression tube fittings shall have Buna-N beveled gasket.

6. Stamp of manufacturer's name or trademark and of fitting size on body.

PART 3 E X E C U T I O N

3.01 GENERAL

A. For service lines and lateral connections larger than those allowed in Pipe Tapping Schedule, branch connections and multiple taps may be used. Space corporation stops minimum of 2 feet apart.

B. Tapped collars of appropriate sizes: Approved in new construction only provided they are set at right angles to proposed meter location.

C. Use tapping machine manufactured for pressure tapping purposes for 2-inch and smaller service taps on pressurized water lines.

D. For new meter or when existing meter is in conflict with proposed pavement improvements, locate water meters one foot inside street right-of-way, or when this is not feasible, one foot on curb side of sidewalk. Contact Project Manager when major landscaping or trees conflict with service line and meter box location. No additional payment will be made for work on customer side of meter.

E. New location and installation of existing small meter shall conform to requirements of this Section.

3.02 SERVICE INSTALLATION

A. Set service taps at right angles to proposed meter location and locate taps in upper pipe segment within 45 degrees of pipe springline.

B. Install service lines in accordance with Section 02317 - Excavation and Backfill for Utilities.

C. Lay service lines with minimum of 30 inches of cover as measured from top of curb or, in absence of curbs, from centerline elevation of crowned streets or roads. Provide minimum of 18 inches of cover below flow line of ditches to service lines.

D. Service lines across existing street (push-unders): Pull service line through prepared hole under paving. Use only full lengths of tubing. Take care not to damage copper tubing when pulling it through hole. Compression-type union is only permitted when

span underneath pavement cannot be accomplished with a full standard length of tubing. Use one compression-type union for each full length of tubing.

E. Maintain service lines free of dirt and foreign matter.

F. Install service lines so that top of meter will be 4 to 6 inches below finished grade.

G. Anticipate existing sanitary sewers to have cement stabilized sand backfill to bottom of pavement. Include cost of such crossings in unit price for services.

3.03 CURB STOP INSTALLATION

A. Set curb stops or angle stops at outer end of service line inside of meter box. Secure opening in curb stop to prevent unwanted material from entering. In close quarters, make S-curve in field. Do not flatten tube. In 3/4-inch and 1-inch services, install meter coupling, swivel-nut, or curb stop ahead of meter. Install straight meter coupling on outlet end of meter.

3.04 SEQUENCE OF OPERATIONS

A. Open trench for proposed service line in accordance with Section 02317 - Excavation and Backfill for Utilities.

B. Install curb stop on meter end of service line.

C. With curb stop open and prior to connecting service line to meter in slack position, open corporation stop and flush service line thoroughly. Close curb stop, leaving corporation stop in full-open position.

D. Check service line for apparent leaks. Repair leaks before proceeding.

E. Schedule inspection with Project Manager prior to backfilling. After inspection, backfill in accordance with Section 02317 - Excavation and Backfill for Utilities.

F. Install meter box centered over meter with top of lid flush with finished grade. Meter box: Refer to Section 02085 - Valve Boxes, Meter Boxes, and Meter Vaults.

Table 02512-1

PIPE TAPPING SCHEDULE				
WATERLINE TYPE AND DIAMETER	SERVICE SIZE			
	3/4"	1"	1-1/2"	2"
4" Cast Iron or Ductile Iron	DSS,WBSS	DSS, WBSS	DSS,WBSS	DSS, WBSS
4" Asbestos Cement	WBSS	WBSS	DSS, WBSS	DSS, WBSS
4" PVC (AWWA C900)	DSS, WBSS	DSS, WBSS	DSS, WBSS	DSS, WBSS
6" and 8" Cast Iron or Ductile Iron	DSS,WBSS	DSS, WBSS	DSS, WBSS	DSS, WBSS
6" and 8" Asbestos Cement	DSS,WBSS	DSS, WBSS	DSS, WBSS	DSS, WBSS
6" and 8" Cast Iron or Ductile Iron	DSS,WBSS	DSS, WBSS	DSS, WBSS	DSS, WBSS
6" and 8" PVC (AWWA C900)	DSS,WBSS	DSS, WBSS	DSS, WBSS	DSS, WBSS
12" Cast Iron or Ductile Iron	DSS,WBSS	DSS, WBSS	DSS, WBSS	DSS, WBSS
12" Asbestos Cement	DSS,WBSS	DSS, WBSS	DSS, WBSS	DSS, WBSS
12" PVC (AWWA C900)	DSS,WBSS	DSS, WBSS	DSS, WBSS	DSS, WBSS
16" and Up Cast Iron or Ductile Iron	DWBSS	DWBSS	DWBSS	DWBSS
16" and Up Asbestos Cement	DWBSS	DWBSS	DWBSS	DWBSS
16" and Up PVC (AWWA C905)	DWBSS	DWBSS	DWBSS	DWBSS

DSS - DUAL STRAP SADDLES
WBSS - WIDE BAND STRAP SADDLES
DWBSS - DUAL WIDE BAND STRAP SADDLES

END OF SECTION

Section 02513

WET CONNECTIONS

PART 1 G E N E R A L

1.01 SECTION INCLUDES

A. Wet connections for new water lines and service lines to existing water lines.

1.02 MEASUREMENT AND PAYMENT

A. Unit Prices.

1. Payment for wet connections shown on Drawings is on unit price basis for each wet connection. Separate payment will be made for each size of water line.

2. No compensation will be given for extra work or for damages occurring as result of incomplete shutoff.

3. Refer to Section 01270 - Measurement and Payment for unit price procedures.

B. Stipulated Price (Lump Sum). If Contract is Stipulated Price Contract, payment for work in this Section is included in total Stipulated Price.

1.03 REFERENCES

A. AWWA C 800 - Standard for Underground Service Line Valves and Fittings.

1.04 DEFINITIONS

A. Wet connections consist of isolating sections of pipe to be connected with existing valves, draining isolated sections, and completing connections.

B. Connection of 2-inch or smaller lines, which may be referred to on Drawings as "2-inch standard connections" or "gooseneck connections" will be measured as 2-inch wet connections. This item is not to be used as part of 2-inch service line.

PART 2 P R O D U C T S

2.01 MATERIALS

A. Pipe shall conform to requirements of applicable portions of Sections 02501 through 02528 related to piping materials and to water distribution.

B. Corporation cocks and saddles shall conform to requirements of Section 02512 - Water

Tap and Service Line Installation.

C. Valves shall conform to requirements of Section 02521 - Gate Valves.

D. Brass fittings shall conform to requirements of AWWA C 800.

PART 3 E X E C U T I O N

3.01 CONNECTION OPERATIONS

A. Plan wet connections in manner and at hours with least inconvenience public. Notify Project Manager at least 72 hours in advance of making connections.

B. Do not operate valves on water lines in use by City. City of Houston Utility Operations Division will handle, at no cost to Contractor, operations involving opening and closing valves for wet connections.

C. Conduct connection operations when Inspector is at job site. Connection work shall progress without interruption until complete once existing water lines have been cut or plugs have been removed for making connections.

3.02 2-INCH WET CONNECTIONS

A. Tap water line. Use corporation cocks, saddles, copper tubing as required for line and grade adjustment, and brass fittings necessary to adapt to existing water line. Use 2-inch valves when indicated on Drawings for 2-inch copper gooseneck connections.

END OF SECTION

Section 02514

DISINFECTION OF WATER LINES

PART 1 G E N E R A L

1.01 SECTION INCLUDES

A. Disinfection of potable water lines.

1.02 MEASUREMENT AND PAYMENT

A. Unit Prices.

1. No separate payment will be made for disinfection of water lines under this Section. Include cost in unit price of water lines being disinfected.

2. Refer to Section 01270 - Measurement and Payment for unit price procedures.

B. Adjusting Payment for Retesting.

1. Subsequent disinfection operations which may be necessary due to nonconforming or incomplete construction will be charged to Contractor. Charges will be deducted from retainage amounts when construction estimates are processed for final payment.

2. Total charge will consist of base charge of $135.00 plus footage charge based on number of feet of specified diameter pipe in construction project. Footage charge is as follows:

Size of Pipe	Charge per Linear Foot
2 inch to 4 inch	$0.03
6 inch	$0.04
8 inch	$0.05
10 inch to 12 inch	$0.07
16 inch to 20 inch	$0.09
24 inch to 30 inch	$0.13
32 inch to 48 inch	$0.16
54 inch	$0.20
60 inch	$0.22
66 inch	$0.31
72 inch to 84 inch	$0.40
90 inch to 96 inch	$0.58
108 inch	$0.75
120 inch or larger	$1.00

C. Stipulated Price (Lump Sum). If Contract is Stipulated Price Contract, payment for

work in this Section is included in total Stipulated Price.

1.03 REFERENCES

A. AWWA C 651 - Standard for Disinfecting Water Mains.

PART 2 P R O D U C T S - Not Used

PART 3 E X E C U T I O N

3.01 CONDUCTING DISINFECTION

A. Promptly disinfect water lines constructed before tests are conducted on water lines and before water lines are connected to City water distribution system.

B. Water for disinfection and flushing will be furnished by City without charge.

C. Unless otherwise provided in Contract Documents, City will conduct disinfection operations assisted by Contractor.

D. Coordinate chlorination operations through Project Manager.

3.02 PREPARATION

A. Provide temporary blind flanges, cast-iron sleeves, plugs, necessary service taps, copper service leads, risers and jumpers of sizes, location and materials, and other items needed to facilitate disinfection of new water lines prior to connection to City water distribution system. Normally, each valved section of water line requires two each 3/4-inch taps. A 2-inch minimum blow-off is required for water lines up to and including 6-inch diameter.

B. Use fire hydrants as blow-offs to flush newly constructed water lines 8 inch diameters and above. Where fire hydrants are not available on water lines, install temporary blow-off valves as approved by Project Manager and remove promptly upon successful completion of disinfection and testing.

C. Slowly fill each section of pipe with water in manner approved by Project Manager. Average water velocity when filling pipeline should be less than one foot per second and shall not, under any circumstance, exceed 2 feet per second. Before beginning disinfection operations, expel air from pipeline.

D. Backfill excavations immediately after installation of risers or blow-offs.

E. Install blow-off valves at end of water line to facilitate flushing of dead-end water lines. Install permanent blow-off valves according to drawings.

3.03 DISINFECTION BY CITY PERSONNEL

A. Correct problems that may prevent disinfection operations prior to advising Project Manager to perform disinfection work. When disinfection work cannot be performed due to covered up valves, missing valve stacks, inoperative fire hydrants or other nonconforming construction, charge will be levied against Contractor for each trip made by City personnel.

B. Notify and coordinate with Project Manager minimum of 72 hours before disinfection work is to be performed. Assist City personnel during disinfection operations.

3.04 DISINFECTION BY CONTRACTOR

A. The following procedure will be used when disinfection by Contractor is required by Contract Documents:

1. Use not less than 100 parts of chlorine per million parts of water.

2. Introduce chlorinating material to water lines in accordance with AWWA C 651.

3. After contact period of not less than 24 hours, flush system with clean water until residual chlorine is no greater than 1.0 parts per million parts of water.

4. Open and close valves in lines being sterilized several times during contact period.

5. If chemical compound is used for sterilizing agent, place in pipes as directed by Project Manager.

3.03 BACTERIOLOGICAL TESTING

A. After disinfection and flushing of water lines, bacteriological tests will be performed by City or testing laboratory in accordance with Section 01454 - Testing Laboratory Services. When test results indicate need for additional disinfection of water lines based upon Texas Department of Health requirements, assist City with additional disinfection operations.

3.06 COMPLETION

A. Upon completion of disinfection and testing, remove risers except those approved for use in subsequent hydrostatic testing, and backfill excavation promptly.

END OF SECTION

Section 02515

HYDROSTATIC TESTING OF PIPELINES

PART 1 G E N E R A L

1.01 SECTION INCLUDES

A. Field hydrostatic testing of newly installed water pipelines.

1.02 MEASUREMENT AND PAYMENT

A. Unit Prices.

1. No payment will be made for hydrostatic testing of pipelines under this Section. Include cost in unit price of pipelines being tested.

2. Refer to Section 01270 - Measurement and Payment for unit price procedures.

B. Stipulated Price (Lump Sum). If Contract is Stipulated Price Contract, payment for work in this Section is included in total Stipulated Price.

PART 2 P R O D U C T S - Not Used

PART 3 E X E C U T I O N

3.01 PREPARATION

A. Disinfect water system pipelines prior to hydrostatic testing.

B. Hydrostatically test newly installed water pipelines after disinfection, when required, and before connecting to City water distribution system.

C. Water for testing will be charged to Contractor in accordance with City Ordinances. Prior to hydrostatic testing, obtain a transient meter from the City Deposit is required for transient meter.

D. Test pipelines with maximum lengths between valves, or plugs, according to the following criteria.

1. 2,000 linear feet for small diameter pipelines (20-inches in diameters or smaller)

2. 4,000 linear feet for large diameter pipelines (24-inches in diameters or larger)

E. Conduct hydrostatic tests in presence of Project Manager.

3.02 TEST PROCEDURES

A. Furnish, install, and operate connections, pump, meter and gages necessary for

hydrostatic testing.

B. Allow pipeline to sit minimum of 24 hours from time it is initially disinfected until testing begins, to allow pipe wall or lining material to absorb water. Periods of up to 7 days may be required for mortar lining to become saturated.

C. For small diameter pipelines, expel air and apply minimum test pressure of 125 psi. For large diameter water lines, expel air and apply minimum test pressure of 150 psi.

D. Begin test by 9:00 a.m. unless otherwise approved by Project Manager. Maintain test pressure for 8 hours. When large quantity of water is required to maintain pressure during test, discontinue testing until cause of water loss is identified and corrected.

E. Keep valves inside pressure reducing stations closed during hydrostatic pressure test.

3.03 ALLOWABLE LEAKAGE FOR WATERLINES

A. During hydrostatic tests, no leakage will be allowed for sections of water lines consisting of welded joints.

B. Maximum allowable leakage for water lines with rubber gasketed joints: 3.19 gallons per inch nominal diameter per mile of pipe per 24 hours while testing.

C. For meter run installation, when work cannot be isolated and line fails pressure test, visual inspection of work by Project Manager for leakage during pressure test may be used to fulfill requirements of this section.

3.04 CORRECTION FOR FAILED TESTS

A. Repair joints showing visible leaks on surface regardless of total leakage shown on test. Check valves and fittings to ensure that no leakage occurs that could affect or invalidate test. Remove cracked or defective pipes, fittings, and valves discovered during pressure test and replace with new items.

B. Project Manager may require failed lines to be disinfected after repair and prior to retesting. Conduct and pay for subsequent disinfection operations in accordance with requirements of Section 02514 - Disinfection of Water Lines. Pay for water required for additional disinfection and retesting.

C. Repeat test until satisfactory results are obtained.

3.05 COMPLETION

A. Upon satisfactory completion of testing, remove risers remaining from disinfection and hydrostatic testing, and backfill excavation promptly.

END OF SECTION

Section 02516

CUT, PLUG AND ABANDONMENT OF WATER LINES

PART 1 G E N E R A L

1.01 SECTION INCLUDES

A. Cut, plug and abandonment of water lines.

1.02 MEASUREMENT AND PAYMENT

A. Unit Prices.

1. Payment for cut, plug, and abandonment of water lines is on a unit price basis for each cut, plug, and abandonment performed. Separate payment will be made for each size of water line.

2. Refer to Section 01270 - Measurement and Payment for unit price procedures.

B. Stipulated Price (Lump Sum). If Contract is Stipulated Price Contract, payment for work in this Section is included in total Stipulated Price.

1.03 SUBMITTALS

A. Conform to requirements of Section 01330 - Submittal Procedures.

B. Submit product data for proposed plugs and clamps for approval.

PART 2 P R O D U C T S

2.01 MATERIALS

A. Concrete for reaction blocks: Class B conforming to requirements of Section 03315 - Concrete for Utility Construction.

B. Plugs and clamps: Applicable for type of pipe to be plugged.

PART 3 E X E C U T I O N

3.01 APPLICATION

A. Do not begin cut, plug and abandonment operations until replacement water line has been constructed, disinfected, and tested, and service lines have been transferred to replacement water line.

B. Install plug, clamp, and concrete reaction block and make cut at location shown on

Drawings.

C. Main to be abandoned shall not be valved off and shall not be cut or plugged other than at supply water line or as shown on Drawings.

D. After water line to be abandoned has been cut and plugged, check for other sources feeding abandoned water line. When sources are found, notify Project Manager immediately. Cut and plug abandoned water line at point of other feed as directed by Project Manager.

E. Plug or cap ends or openings in abandoned water line in manner approved by Project Manager.

F. Remove and dispose of surface identifications such as valve boxes and fire hydrants. Valve boxes in improved streets, other than shell, may be filled with concrete after removing cap.

G. Backfill excavations in accordance with Section 02317 - Excavation and Backfill for Utilities.

H. Repair street surfaces in accordance with Section 02951- Pavement Repair and Restoration.

END OF SECTION

Section 02520

FIRE HYDRANTS

PART 1 G E N E R A L

1.01 SECTION INCLUDES

A. Fire hydrants.

B. Adjustment of fire hydrants and gate valves.

1.02 MEASUREMENT AND PAYMENT

A. Unit Prices.

1. Payment is on a unit price basis for each fire hydrant assembly, including 6-inch gate valve and box, installed regardless of barrel depth.

2. Payment for fire hydrant branches (leads) is on linear foot basis for each branch installed. Separate pay items are used for open-cut and augered branches.

3. Payment for salvaged fire hydrants is on unit price basis for each fire hydrant removed and returned to City's Maintenance Quadrant Stock yard.

4. Refer to Section 01270 - Measurement and Payment for unit price procedures.

B. Stipulated Price (Lump Sum). If Contract is Stipulated Price Contract, payment for work in this Section is included in total Stipulated Price.

1.03 REFERENCES

A. AWWA C 502 – Standard for Dry Barrel fire Hydrants (Latest Edition).

B. AWWA C 550 - Standard for Protective Epoxy Interior Coatings for Valves and Hydrants

C. SSPC SP2 - Hand Tool Cleaning

D. SSPC SP3 - Power Tool Cleaning

E. SSPC SP10 - Near-White Blast Cleaning

F. SSPC SP11 - Power Tool Cleaning to Bare Metal

G. SSPC Paint Spec No.21

H. SSPC-Paint 21 - White or Colored Silicone Alkyd Paint

I. SSPC-Paint 25 - Zinc Oxide, Alkyd, Linseed Oil Primer for Use Over Hand Cleaned Steel, Type I and Type II

J. SSPC-Paint 104 - White or Tinted Alkyd Paint

K. Federal Standard A-A-2962A - Enamel, Alkyd, Solvent Based Low VOC

1.04 SUBMITTALS

A. Conform to requirements of Section 01330 - Submittal Procedures.

B. Submit name of hydrant manufacturer, type of bonnet paint, and engineering control drawing number for hydrant proposed for use.

PART 2 P R O D U C T S

2.01 HYDRANTS

A. Provide fire hydrants in conformance with AWWA C 502, Standard for Dry Barrel Fire Hydrants (Latest Edition). Hydrants are approved by the City for issuance of a Certificate of Responsibility. Approved fire hydrants are listed under City's Approved Water Product List (included with this contract).

B. Provide 5" Storz Hydrant nozzle on new hydrants at assembly. The nozzle shall be comprised of a brass tail piece and metal face. The Storz lugs and cap shall be made from hard anodized 6061-T6 aluminum. The hardcoat anodizing shall be done per Mil-A-8625 Type 3 dark gray.

C. The Project Manager may, at any time prior to or during installation of hydrants, randomly select furnished hydrant for disassembly and laboratory inspection, at City expense, to verify compliance with Specifications. When hydrant is found to be non-compliant, replace, at Contractor's expense, hydrants, with hydrants that comply with Specifications.

D. Provide lower hydrant barrel fabricated from Ductile Iron Pipe as single piece, connected to upper hydrant barrel by means of joint coupling that will provide three hundred sixty degree (360) rotation of upper barrel.

2.02 LEADS

A. Branches (Leads): Conform to requirements of Section 02501 - Ductile Iron Pipe and Fittings, Section 02502 - Steel Pipe and Fittings, and Section 02506 - Polyvinyl Chloride Pipe.

2.03 HYDRANT PAINTING

A. New hydrants and refurbished hydrants shall be shop coated as specified herein.

B. Exterior Above Traffic Flange (Including Bolts & Nuts).

1. Surface preparation to be in accordance with SSPC-SP 10 (NACE 2) near white blast cleaned surface.

2. Coat with three coat alkyd/silicone alkyd system with total dry film thickness (DFT) of 6 - 9 mils as follows:

   a. Prime Coat - Oil modified alkyd primer, to be in general conformance with SSPC Paint Specification No. 25. Total dry film thickness (DFT) 2 - 3 mils.

   b. Intermediate Coat - Heavy Duty Industrial Alkyd Enamel to be in general conformance with SSPC Paint Specification No. 104, and Federal Standard A-A-2962A. Total dry film thickness (DFT) of 2 -3 mils.

   c. Finish Coat - Silicone Alkyd Resin Enamelto be in general conformance with SSPC Paint Specification No. 21. Total dry film thickness (DFT) to be 2 - 3 mils. Exception - hydrant bonnet shall not be finished shop coated, only intermediate coated. Install color coded finish coating of bonnet in field.

   d. Bonnet Paint - Field apply finish coat of Silicone Alkyd Resin Enamel to be in general conformance with SSPC Paint Specification No. 21. Dry film thickness of 2 - 3 mils. Bonnet colors are to be as specified in Paragraph 3.01 to designate the appropriate size of water supply line.

3. Colors - Primer: Manufacturer’s standard color. Finish coat of hydrant body: ACRO 555 Crystal Blue or equivalent. Connection caps: Finished coated white. Paint white band of finish coat two (2) inches in width on hydrant body approximately six inches (6") above and parallel to traffic flange. Intermediate coat: Contrasting color to blue finish, such as white.

C. Field Maintenance Painting (Exterior Above Traffic Flange)

1. Surface Preparation to be in accordance with SSPC - SP2, Hand Tool Cleaning, or SSPC - SP3, Power Tool Cleaning, depending on condition of existing paint and extent of corrosion. It is not necessary to remove tightly adhered mill scale, rust, and paint. Mill scale, rust and paint are considered tightly adherent when they cannot be removed with dull putty knife. In some severe cases where it is necessary to remove majority of existing paint, surface should be cleaned in accordance with SSPC -SP11, Power Tool Cleaning to Bare Metal.

2. When surface is cleaned to bare metal (SSPC - SP11), coat hydrant with three coat Alkyd/Silicone Alkyd system in accordance with Paragraph 2.03.B.2 as for new hydrants. When surface is cleaned to SSPC - SP2 or SSPC - SP3, coat hydrant with Silicone Alkyd Resin Enamel in general conformance with SSPC

Paint Specification No. 21. Total dry film thickness of 3-6 mils.

D. Exterior Below Traffic Flange (including lower barrel extensions).

1. Surface preparation in accordance with SSPC- SP10 (MACE 2) Near White Blast Cleaned Surface.

2. Primer and intermediate coat: coal tar epoxy in general conformance with SSPC Paint Specification No. 16. Apply two (2) coats with dry film thickness (DFT) of 8 - 10 mils each for total DFT of 16 -20 mils.

3. Finish coat: Water based vinyl acrylic mastic Apply one coat with dry film thickness of 6 - 8 mils. Color of finish coat to be same as finish coat for exterior above traffic flange, i.e., blue. (Acro 555 Crystal Blue, or equivalent.)

E. Interior Surfaces Above and Below Water Line Valve (including lower barrel extensions).

1. Material used for internal coating of hydrant interior ferrous surfaces must be NSF certified as suitable for contact with potable water as required by Chapter 290, Rules and Regulations for Public Water Systems, Texas Commission on Environmental Quality.

2. Coating shall be liquid or powder epoxy system in accordance with AWWA Standard C - 550 (latest revision). Coating may be applied in two or three coats, according to manufacturer's recommendations, for total dry film thickness of 12 -18 mils.

PART 3 E X E C U T I O N

3.01 INSTALLATION

A. Set fire hydrant plumb and brace at locations and grades as shown on Drawings. When barrel of hydrant passes through concrete slab, place 1-inch-thick piece of standard sidewalk expansion joint material around section of barrel passing through concrete.

B. Locate nozzle center line minimum 22 inches above finish grade.

C. Place 12-inch by 12-inch yellow indicators (plastic, sheet metal, plywood, or other material approved by Project Manager) on pumper nozzles of new or relocated fire hydrants installed on new water lines not in service. Remove indicators after new water line is tested and approved by Project Manager.

D. Do not cover drain ports when placing concrete thrust block.

E. Obtain Project Manager's approval in writing prior to installation of hydrants which require changes in bury depth due to obstructions not shown on Drawings. Unit price

adjustments will not be allowed for changes in water line flow line or fire hydrant barrel length caused by obstructions.

F. Plug branch lines to valves and fire hydrants shown on Drawings to be removed. Deliver fire hydrants designated for salvage to nearest Utility Maintenance Quadrant Facility.

G. Install branches (leads) in accordance with Section 02511 - Water Lines.

H. Coating Requirements:

1. Apply coatings in strict accordance with manufacturer's recommendations. No requirements of this specification shall cancel or supersede written directions and recommendations of specific manufacturer so as to jeopardize integrity of applied system.

2. Furnish affidavit of compliance that coatings furnished complies with requirements of this specification and referenced standards, as applicable.

I. Use following color code for field coating of hydrant bonnet to indicate size of water line supplying hydrant:

Supply Water Line Diameter (inches)	**Bonnet Color**
6	Yellow
8	White
12-20	Green
24 and larger	Orange

J. Remove and dispose of unsuitable materials and debris in accordance with requirements of Section 01576 - Waste Material Disposal.

END OF SECTION

Section 02521

GATE VALVES

PART 1 G E N E R A L

1.01 SECTION INCLUDES

A. Gate valves.

1.02 MEASUREMENT AND PAYMENT

A. Unit Prices.

1. Payment for gate valves 20 inches in diameter and smaller is on a unit price basis for each installation.

2. Payment for gate valves 24 inches to 36 inches in diameter is on a unit price basis. Unit price includes cost of required box for gate valves.

3. Payment for 2-inch blow-off valve with box is on a unit price basis for each installation.

4. Refer to Section 01270 - Measurement and Payment for unit price procedures.

B. Stipulated Price (Lump Sum). If Contract is Stipulated Price Contract, payment for work in this Section is included in total Stipulated Price.

1.03 REFERENCES

A. ASTM A 307 - Standard Specification for Carbon Steel Bolts and Studs, 60,000 psi Tensile.

B. ASTM B 62 - Standard Specification for Composition Bronze or Ounce Metal Casting.

C. ASTM D 429 - Standard Test Methods for Rubber Property-Adhesion to Rigid Substrates.

D. ASTM B 763 - Standard Specification for Copper Alloy Sand Casting for Valve Application.

E. AWWA C 500 - Standard for Metal-Seated Gate Valves for Water Supply Service.

F. AWWA C 509 - Standard for Resilient-Seated Gate Valves for Water Supply Service.

G. AWWA C 515- Standard for Reduced Wall, Resilient- Seated Gate Valves for Water Supply Service.

H. AWWA C 550 - Standard for Protective Epoxy Interior Coatings for Valves and Hydrants.

1.04 SUBMITTALS

A. Conform to requirements of Section 01330 - Submittal Procedures.

B. Submit manufacturer's product data for proposed valves for approval.

C. Provide detailed drawings of gearing mechanism for 20-inch and larger gate valves.

1.05 QUALITY CONTROL

A. Submit manufacturer's affidavit that gate valves are manufactured in the United States and conform to stated requirements of AWWA C 500, AWWA C 509, AWWA C 515, and this Section, and that they have been satisfactorily tested in the United States in accordance with AWWA C 500, AWWA C 509, and AWWA C 515.

PART 2 P R O D U C T S

2.01 MATERIALS

A. Gate Valves: AWWA C 500, AWWA C 509, AWWA C 515 and additional requirements of this Section. Direct bury valves and those in subsurface vaults open counter-clockwise; aboveground and plant valves open counter-clockwise.

B. If type of valve is not indicated on Drawings, use gate valves as line valves for sizes 20-inches and smaller. When type of valve is indicated, no substitute is allowed.

C. Gate Valves 1-1/2 inches in Diameter and Smaller: 125 psig; bronze; rising-stem; single-wedge; disc type; screwed ends

D. Coatings for Gate Valves 2 inches and larger: AWWA C 550 non-toxic, imparts no taste to water, functions as physical, chemical, and electrical barrier between base metal and surroundings, minimum 8-mil-thick, fusion-bonded epoxy. Prior to assembly of valve, apply protective coating to interior and exterior surfaces of body.

E. Gate Valves 2 inches in diameter: Iron body, double disc or resilient-seated, non-rising stem, 150-pound test, 2-inch square nut operating counter-clockwise to open.

F. Gate Valves 3 inches to 12 inches in diameter: Non-directional, standard-wall resilient seated (AWWA C 509), parallel seat double disc (AWWA C 500), or reduced-wall resilient seated gate valves (AWWA C 515), 200 psig pressure rating, bronze mounting, push-on bell ends with rubber joint rings, and nut-operated unless otherwise specified. Provide approved standard-wall resilient seated valves. Provide approved reduced-wall resilient seated valves.

Provide approved double disc valves. Comply with following requirements unless

otherwise specified in Drawings:

1. Design: Fully encapsulated rubber wedge or rubber seat ring mechanically attached with minimum 304 stainless-steel fasteners or screws; threaded connection isolated from water by compressed rubber around opening.

2. Body: Cast or ductile iron, flange bonnet and stuffing box together with ASTM A 307 Grade B bolts. Manufacturer's initials, pressure rating, and year manufactured shall be cast in body.

3. Bronze: Valve components in waterway to contain not more than 15 percent zinc and not more than 2 percent aluminum.

4. Stems: ASTM B 763 bronze, alloy number-995 minimum yield strength of 40,000 psi; minimum elongation in 2-inches of 12 percent, non-rising.

5. O-rings: For AWWA C 500, Section 3.12.2. For AWWA C 509, Sections 2.2.6 and 4.8.2. For AWWA C 515, Section 4.2.2.5.

6. Stem Seals Consist of three O-rings, two above and one below thrust collar with anti-friction washer located above thrust collar for operating torque.

7. Stem Nut: Independent or integrally cast of ASTM B 62 bronze.

8. Resilient Wedge: Molded, synthetic rubber, vulcanized and bonded to cast or ductile iron wedge or attached with 304 stainless steel screws tested to meet or exceed ASTM D 429 Method B; seat against epoxy-coated surface in valve body.

9. Bolts: AWWA C 500 Section 3.4, AWWA C 509 Section 4.4 or AWWA C 515 Section 4.4.4; stainless steel; cadmium plated, or zinc coated.

G. Gate valves 14 inch and larger in Diameter: AWWA C 500; parallel seat double disc gate valves; push-on bell ends with rubber rings and nut-operated unless otherwise specified. Provide approved double disc valves with 150 psig pressure rating. Comply with following requirements unless otherwise specified on Drawings:

1. Body: Cast iron or ductile iron; flange together bonnet and stuffing box with ASTM A 307 Grade B bolts. Cast following into valve body manufacturer's initials, pressure rating, and year manufactured. When horizontally mounted, equip valves greater in diameter than 12 inches with rollers, tracks, and scrapers.

2. O rings: For AWWA C 500, Section 3.12.2. For AWWA C 515, Section 4.2.2.5.

3. Stems: ASTM B 763 bronze, alloy number-995 minimum yield strength of 40,000 psi; minimum elongation in 2-inches of 12 percent, non-rising.

4. Stem Nut: Machined from ASTM B 62 bronze rod with integral forged thrust collar machined to size; non-rising.

5. Stem Seals: Consist of three O-rings, two above and one below thrust collar with anti-friction washer located above thrust collar for operating torque.

6. Bolts: AWWA C 500 Section 3.4 or AWWA C 515 Section 4.4.4; stainless steel; cadmium plated, or zinc coated.

7. Discs: Cast iron with bronze disc rings securely penned into machined dovetailed grooves.

8. Wedging Device: Solid bronze or cast-iron, bronze-mounted wedges. Thin plates or shapes integrally cast into cast-iron surfaces are acceptable. Other moving surfaces integral to wedging action shall be bronze monel or nickel alloy-to-iron.

9. Provide bypass for double-disc valves (AWWA C500).

10. Bronze Mounting: Built as integral unit mounted over, or supported on, cast-iron base and of sufficient dimensions to be structurally sound and adequate for imposed forces.

11. Gear Cases: Cast iron; furnished on 18-inch and larger valves and of extended type with steel side plates, lubricated, gear case enclosed with oil seal or O-rings at shaft openings.

12. Stuffing Boxes: Located on top of bonnet and outside gear case.

H. Gate valves 14 inches to 48 inches: Provide AWWA C 515; reduced-wall, resilient seated gate valves with 250 psig pressure rating. Furnish with spur or bevel gearing.

1. Mount valves horizontally if proper ground clearance cannot be achieved by normal vertical installation. For horizontally mounted gate valves, provide bevel operation gear mounted vertically for above ground operation.

2. Use valve body, bonnet, wedge, and operator nut constructed of ductile iron. Fully encapsulate exterior of ductile iron wedge with rubber.

3. Ensure wedge is symmetrical and seals equally well with flow in either direction.

4. Provide ductile iron operator nut with four flats at stem connection to apply even input torque to the stem.

5. Bolts: AWWA C515, Section 4.4.4, Stainless Steel; cadmium plated or zinc coated.

6. Provide high strength bronze stem and nut.

7. O-rings: AWWA C515, Section 4.2.2.5, pressure O-rings as gaskets.

8. Provide stem sealed by three O-rings. Top two O-rings are to be replaceable with valve fully open at full rated working pressure.

9. Provide thrust washers to the thrust collar for easy valve operation.

I. Gate Valves Extension Stem: When shown on Drawings, provide non-rising, extension stem having coupling sufficient to attach securely to operating nut of valve. Upper end of extension stem shall terminate in square wrench nut no deeper than 4 feet from finished grade or as shown on Drawings. Support extension stem with an arm attached to wall of manhole or structure that loosely holds extension stem and allows rotation in the axial direction only.

J. Gate Valves in Factory Mutual (Fire Service) Type Meter Installations: Conform to provisions of this specification; outside screw and yoke valves; carry label of Underwriters' Laboratories, Inc.; flanged, Class 125; clockwise to close.

K. Gate Valves for Tapping Steel Pipe: Provide double disc gate valve. Resilient wedge gate valve shall only be installed in a vertical position.

L. Provide flanged joints when valve is connected to steel or PCCP.

M. Key valve stem into the operator nut.

N. Do not exceed 600 ft-lbs of torque on operator nut on gate valve.

PART 3 E X E C U T I O N

3.01 INSTALLATION

A. Earthwork. Conform to applicable provisions of Section 02317 - Excavation and Backfilling for Utilities.

B. Operation. Do not use valves for throttling without prior approval of manufacturer.

3.02 SETTING VALVES AND VALVE BOXES

A. Remove foreign matter from within valves prior to installation. Inspect valves in open and closed positions to verify that parts are in satisfactory working condition.

B. Install valves and valve boxes where shown on Drawings. Set valves plumb and as detailed. Center valve boxes on valves. Carefully tamp earth around each valve box for minimum radius of 4 feet, or to undisturbed trench face when less than 4 feet. Install valves completely closed when placed in water line.

C. For pipe section of each riser, use only 6 inch, ductile iron Class 51, or DR18 PVC pipe cut to proper length. Riser must be installed to allow complete access for

operation of valve. Assemble and brace box in vertical position as indicated on Drawings.

3.03 DISINFECTION AND TESTING

A. Assist Project Manager with disinfection of valves and appurtenances as required by Section 02514 - Disinfection of Water Lines and test as required by Section 02515 - Hydrostatic Testing of Pipelines.

B. Double-Disc Gate Valves: Apply hydrostatic test pressure equal to twice rated working pressure of valve between discs. Valve shall show no leakage through metal, flanged joints, or stem seals. Test at rated working pressure, applied between discs. Valve shall show no leakage through metal, flanged joints, or stem seals. Do not exceed leakage rate of 1 oz/hr/inch of nominal valve size.

C. Solid-Wedge Gate Valves: Apply hydrostatic pressure equal to twice rated working pressure of valve with both ends bulkheaded and gate open. Valve shall show no leakage through metal, flanged joints, or stem seals. Test at rated working pressure, applied through bulkheads alternately to each side of closed gate with opposite side open for inspection. Valve shall show no leakage through metal, flanged joints, or stem-seals. Do not exceed leakage rate of 1 oz/hr/inch of nominal valve size.

D. Repair or replace valves which exceed leakage rate.

3.04 PAINTING OF VALVES

A. Paint valves in vaults, stations, and above ground with approved paint.

END OF SECTION

Section 02525

TAPPING SLEEVES AND VALVES

PART 1 G E N E R A L

1.01 SECTION INCLUDES

A. Tapping sleeves and valves for connections to existing water system.

1.02 MEASUREMENT AND PAYMENT

A. Unit Prices.

1. Payment is on unit price basis for each tap installed.

2. Refer to Section 01270 - Measurement and Payment for unit price procedures.

3. For water lines 4-inches and greater, no payment will be made until coupon (cut out portion of pipe tapped) is delivered to City.

B. Stipulated Price (Lump Sum). If Contract is Stipulated Price Contract, payment for work inthis Section is included in total Stipulated Price.

1.03 REFERENCES

A. ASTM A240 - Standard Specification for Heat-Resisting Chromium and Chromium-Nickel Stainless Steel Plate, Sheet, and Strip for Pressure Vessels

B. ASTM A193 Standard Specification for Alloy-Steel and Stainless Steel Bolting Materials for High-Temperature Service.

C. ASTM A194 Standard Specification for Carbon and Alloy Steel Nuts for Bolts for High-Pressure or High-Temperature Service

D. AWWA C 110 - Standard for Ductile-Iron and Gray-Iron Fittings, 3 in. through 48 in., for Water and other Liquids.

E. AWWA C 200 - Standard for Steel Water Pipe - 6 in. and Larger.

F. AWWA C 207 - Standard for Steel Pipe Flanges for Waterworks Service - Sizes 4 in. Through 144 in.

G. AWWA C 500 - Standard for Metal Seated Gate Valves, for Water Supply Service.

H. AWWA C 223 - Fabricated Steel and Stainless Steel Tapping Sleeves.

1.04 SUBMITTALS

A. Conform to requirements of Section 01330 - Submittal Procedures.

B. Submit results of tapping sleeves NPT test opening.

C. Submit manufacturer's affidavit as required in Section 02521 - Gate Valves.

1.05 DELIVERY, STORAGE AND HANDLING

A. Ship steel sleeves in wooden crates that provide protection from damage to epoxy coating during transport and storage.

PART 2 P R O D U C T S

2.01 MATERIALS

A. Tapping Sleeves:

1. Tapping Sleeve Bodies: AWWA C 110 cast or ductile iron or AWWA C 200 carbon steel in two sections to be bolted together with high-strength, corrosion-resistant, low-alloy steel bolts with mechanical joint ends.

2. Branch Outlet of Tapping Sleeve:

a. Flanged, machined recess, AWWA C 207, Class D, ANSI 150 pound drilling.

b. Gasket: Affixed around recess of tap opening to prevent rolling or binding during installation.

3. Use cast iron split sleeve where fire service from 6-inch water line is approved.

B. Welded-steel tapping-sleeve bodies may be used in lieu of cast or ductile iron bodies for following sizes and with following restrictions:

1. Flange: AWWA C 207, Class D, ANSI 150 pound drilling.

2. Gasket: Affixed around recess of tap opening to prevent rolling or binding during installation.

3. Steel sleeves are restricted to use on pipe sizes 6 inches and larger.

4. Body: Heavy, welded-steel construction; top half grooved to retain neoprene O-ring seal permanently against outside diameter of pipe.

5. Bolts: AWWA C 500 Section 3.5; coated with 100 percent vinyl resin or corrosive resistant material.

6. Steel Sleeves Finish: Fusion-bonded epoxy coated to minimum 12 mil thickness.

7. Finished Epoxy Coat: Free of laminations and blisters; and remain pliant and resistant to impact with non-peel finish.

8. Provide approved steel tapping sleeves

9. Tapping Sleeves: Provide with 3/4-inch NPT test opening for testing prior to tapping. Provide 3/4-inch bronze plug for opening.

10. Do not use steel sleeves for taps greater than 75 percent of pipe diameter.

11. Comply with AWWA C 223 - Fabricated Steel and Stainless Steel Tapping Sleeves.

C. Stainless Steel tapping-sleeve bodies and flange may be used in lieu of cast or ductile iron bodies for following sizes and with following restrictions:

1. Flange: ASTM A240 Stainless Steel, Type 304, ANSI 150 pound drilling.

2. Gasket: Full circumferential, affixed around recess of tap opening to prevent rolling or binding during installation, compounded for water and sewer service.

3. Stainless Steel sleeves are restricted to use on pipe sizes 4 inches and larger.

4. Body: ASTM A240 Stainless Steel, Type 304.

5. Bolts: ASTM A193 Stainless Steel, Type 304.

6. Nuts: ASTM A194 Stainless Steel, Type 304.

7. Branch Outlet: Heavy Stainless Steel Pipe

8. Provide approved stainless steel tapping sleeves.

9. Do not use stainless steel sleeves for taps greater than 75 percent of pipe diameter.

10. Comply with AWWA C 223 - Fabricated Steel and Stainless Steel Tapping Sleeves.

D. Tapping Valves: Meet requirements of Section 02521 - Gate Valves with following exceptions:
1. Inlet Flanges:

2.

a. AWWA C 110; Class 125.

b. AWWA C 110; Class 150 and higher: Minimum 8-hole flange.

2. Outlet: Standard mechanical or push-on joint to fit any standard tapping machine.

3. Valve Seat Opening: Accommodate full-size shell cutter for nominal size tap without contact with valve body; double disc.

E. Valve Boxes: Standard Type "A" valve boxes conforming to requirements of Section 02085 - Valve Boxes, Meter Boxes, and Meter Vaults.

PART 3 E X E C U T I O N

3.01 APPLICATION

A. Install tapping sleeves and valves at locations and of sizes shown on Drawings. Install sleeve so valve is in horizontally level position unless otherwise indicated on Drawings.

B. Clean tapping sleeve, tapping valve, and pipe prior to installation and in accordance with manufacturer's instructions.

C. Hydrostatically test installed tapping sleeve to 150 psig for minimum of 15 minutes. Inspect sleeve for leaks, and remedy leaks prior to tapping operation.

D. When tapping concrete pressure pipe, size on size, use shell cutter one standard size smaller than water line being tapped.

E. Do not use Large End Bell (LEB) increasers with next size tap unless existing pipe is asbestos-cement.

3.02 INSTALLATION

A. Verify outside diameter of pipe to be tapped prior to ordering sleeve.

B. Tighten bolts in proper sequence so that undue stress is not placed on pipe.

C. Align tapping valve properly and attach to tapping sleeve. Insert insulation sleeves into flange holes of tapping valve and pipe. Make insertions of sleeves on pipe side of tapping valve. Do not damage insulation sleeves during bolt tightening process.

D. Make tap with sharp, shell cutter:

1. For 12-inch and smaller tap, use minimum cutter diameter one-half inch less than nominal tap size.

2. For 16-inch and larger tap, use manufacturer's recommended cutter diameter.

E. Withdraw coupon and flush cuttings from newly-made tap.

F. Wrap:

1. For 12-inch and smaller tap, wrap completed tapping sleeve and valve in accordance with Section 02528 - Polyethylene Wrap.

2. For 16-inch and larger tap, apply coal tar epoxy around completed tapping sleeve and valve. The coal tar epoxy shall be applied with minimum of two (2) coats. Each coat of coal tar epoxy shall have minimum dry film thickness of 16 mils.

G. Place concrete thrust block behind tapping sleeve (not over tapping sleeve and valve).

H. Request inspection of installation prior to backfilling.

I. Backfill in accordance with Section 02317 - Excavation and Backfill for Utilities.

END OF SECTION

Section 02611

REINFORCED CONCRETE PIPE

PART 1 G E N E R A L

1.01 SECTION INCLUDES

A. Reinforced concrete pipe for sanitary sewers and storm sewers.

1.02 MEASUREMENT AND PAYMENT

A. Unit Prices.

1. No separate payment will be made for reinforced concrete pipe under this Section. Include cost in unit price Work as specified in following Sections:

a. Section 02426 - Sewer Line in Tunnels.

b. Section 02531 - Gravity Sanitary Sewers.

c. Section 02631 - Storm Sewers.

2. Refer to Section 01270- Measurement and Payment for unit price procedures.

B. B. Stipulated Price (Lump Sum). If Contract is Stipulated Price Contract, payment for Work in this section is included in total Stipulated Price.

1.03 REFERENCES

A. ASTM C 76 - Standard Specification for Reinforced Concrete Culvert, Storm Drain, and Sewer Pipe.

B. ASTM C 443 - Standard Specification for Joints for Circular Concrete Sewer and Culvert Pipe Using Rubber Gaskets.

C. ASTM C 497 - Standard Test Method for Concrete Pipe, Manhole Sections, or Tile.

D. ASTM C 506 - Standard Specification for Reinforced Concrete Arch Culvert, Storm Drain and Sewer Pipe

E. ASTM C 655 - Standard Specification for Reinforced Concrete D-load Culvert, Storm Drain and Sewer Pipe.

F. ASTM C 877 - Standard Specification for External Sealing Bands for Noncircular Concrete Sewer, Storm Drain, and Culvert Pipe.

1.04 SUBMITTALS

A. Conform to requirements of Section 01330 - Submittal Procedures.

B. Submit complete product data for pipe, fittings and gaskets for approval. Indicate conformance to appropriate reference standards.

C. Submit manufacturer's certificate that concrete pipes meet applicable standards.

D. For jacking pipe, submit drawings and data describing grouting port design and closure procedures when required by Section 02431 - Tunnel Grout, including liner repair, as applicable.

PART 2 P R O D U C T S

2.01 REINFORCED CONCRETE PIPE

A. Conform circular reinforced concrete pipe to requirements of ASTM C 76, for Class III wall "B" thickness. Conform to rubber gasket joints for sanitary sewers and storm sewers and tongue and groove for roadside ditch culverts to ASTM C 443.

B. Conform reinforced concrete arch pipe to requirements of ASTM C 506 for Class A-III. Joints shall conform to ASTM C 877.

C. Reinforced concrete elliptical pipe, either vertical or horizontal, shall conform to requirements of ASTM C 507 for Class VE-III for vertical or Class HE-III for horizontal. Use rubber gasket joints conforming to ASTM C 877.

D. Conform reinforced concrete D-load pipe requirements of ASTM C 655.

2.02 GASKETS

A. When no contaminant is identified, furnish rubber gasket conforming to ASTM C 443 for circular reinforced concrete pipe and rubber gasket conforming to ASTM C 877 for reinforced concrete elliptical pipe.

B. Use the following gasket materials for pipes to be installed in potentially contaminated areas, especially where free product is found near elevation of proposed sewer:

CONTAMINANT	GASKET MATERIAL REQUIRED
Petroleum (diesel, gasoline)	Nitrile Rubber
Other Contaminants	As recommended by pipe manufacturer

2.03 LINERS FOR SANITARY SEWER PIPE

A. Reinforced concrete pipe for sanitary sewers shall be PVC lined and conform to Section 02427 - Plastic Liner for Large Diameter Concrete Sewers and Structures.

B. Reinforced concrete pipes to be installed in potentially contaminated areas shall have liners recommended by manufacturer as resistant to contaminants identified in Phase II Environmental Site Assessment Report.

2.04 SOURCE QUALITY CONTROL

A. Representatives of City Engineer will inspect manufacturer's plant and casting operations as deemed necessary.

PART 3 E X E C U T I O N

3.01 INSTALLATION

A. Conform to requirements of following Sections, as applicable:

1. Section 02448 - Pipe and Casing Augering for Sewers.

2. Section 02531 - Gravity Sanitary Sewers.

3. Section 02631 - Storm Sewers.

4. Section 02441 - Micro-tunneling and Pipe-Jacked Tunnels.

B. Install reinforced concrete pipe in accordance with manufacturer's recommendations.

END OF SECTION

Section 02631

STORM SEWERS

PART 1 G E N E R A L

1.01 SECTION INCLUDES

A. New storm sewers and appurtenances, modifications to existing storm sewer system and installation of roadside ditch culverts.

1.02 MEASUREMENT AND PAYMENT

A. Unit Prices.

1. Payment for storm sewers, including elliptical or box, installed by open-cut, augered with or without casing, or tunneling is on linear foot basis. Measurement for storm sewers and roadside ditch culverts will be taken along center line of pipe from center line to center line of manholes or from end to end of culverts. Payment will be made for each linear foot installed complete in place, including connections to existing manholes and inlets.

2. Payment for storm sewer leads, including elliptical leads, is on a linear foot basis.

3. Payment for corrugated metal pipe storm sewer outfall, including timber bents, is on a linear foot basis.

4. Refer to Section 01270 - Measurement and Payment for unit price procedures.

B. Stipulated Price (Lump Sum). If Contract is Stipulated Price Contract, payment for Work in this Section is included in total Stipulated Price.

1.03 SUBMITTALS

A. Conform to requirements of Section 01330 - Submittal Procedures.

B. Submit manufacturer's literature for product specifications and installation instructions.

C. Submit proposed methods, equipment, materials, and sequence of operations for sewer construction. Plan operations to minimize disruption of utilities to occupied facilities or adjacent property.

1.04 QUALITY ASSURANCE

A. The Condition for acceptance shall be watertight storm sewer that is watertight both in pipe-to-pipe joints and in pipe-to-manhole connections.

B. Provide manufacturer's certification to Specifications.

1.05 PRODUCT DELIVERY, STORAGE, AND HANDLING

A. Comply with manufacturer's recommendations.

B. Handle pipe, fittings, and accessories carefully with approved handling devices. Do not drop or roll pipe off trucks or trailers. Do not use Materials cracked, gouged, chipped, dented, or otherwise damaged shall not be use materials for installation.

C. Store pipe and fittings on heavy timbers or platforms to avoid contact with ground.

D. Unload pipe, fittings, and appurtenances as close as practical to location of installation to avoid unnecessary handling.

E. Keep interiors of pipe and fittings free of dirt and foreign matter.

F. Store PVC pipe out of direct sunlight.

PART 2 P R O D U C T S

2.01 PIPE

A. Provide piping materials for storm sewers shall be of sizes and types specified unless otherwise indicated on Drawings.

B. In diameters where material alternatives are available, provide pipe from single manufacturer for each pipe diameter, unless otherwise approved by Project Manager or otherwise shown on Drawings.

C. Existing pipe that has been removed during construction cannot be reused.

2.02 PIPE MATERIAL SCHEDULE

A. Storm Sewer Pipe: Use pipe materials that conforming to requirements specified in one or more of the following Sections as shown on the Drawings.

1. Section 02506 - Polyvinyl Chloride Pipe. Not allowed in the following applications:

   a. Potentially Petroleum Contaminated Areas (PPCA).

   b. Augering/ jacking

2. Section 02505 - High Density Polyethylene (HDPE) Solid and Profile Wall Pipe. For use only where Storm Sewers are associated with Local Streets, where Local Street is definded by City of Houston Code of Ordinances 42-122.
3. Section 02611 - Reinforced Concrete Pipe.

4. Section 02641 - Monolithic Reinforced Concrete Sewers.

5. Section 02612 - Precast Reinforced Concrete Box Sewers.

6. Section 02642 - Corrugated Metal Pipe use only where Corrugated Metal Pipe is shown on Drawings.

B. Driveway Culvert Pipe for Streets with Open Ditches: Use pipe materials conforming to requirements specified in one or more of the following Sections as shown on the Drawings.

1. Section 02505 - High Density Polyethylene (HDPE) Solid and Profile Wall Pipe Use for Residential Culverts only. Use Concrete Pipe for long run culverts.

2. Section 02611 - Reinforced Concrete Pipe.

3. Section 02641 - Monolithic Reinforced Concrete Sewers.

4. Section 02612 - Precast Reinforced Concrete Box Sewers.

C. Provide pipe meeting minimum class, dimension ratio, or other criteria indicated.

D. Pipe materials other than those listed above shall not be used for storm sewers.

2.03 BEDDING, BACKFILL, AND TOPSOIL MATERIAL

A. Bedding and Backfill Material: Conform to requirements of Sections 02317 - Excavation and Backfill for Utilities, Section 02320 - Utility Backfill Material, and Section 2321 – Cement Stabilized Sand, and 02322 – Flowable Fill.

B. Topsoil: Conform to requirements of Section 02911 - Topsoil.

PART 3 E X E C U T I O N

3.01 PREPARATION

A. Prepare traffic control plans and set up street detours and barricades in preparation for excavation when construction will affects traffic. Conform to requirements of Section 01555 Traffic Control and Regulation.

B. Provide barricades, flashing warning lights, and signs for excavations. Conform to requirements of Section 01555 - Traffic Control and Regulation. Maintain barricades and warning lights for streets and intersections while Work is in progress or where traffic is affected by Work.

C. Immediately notify agency or company owning utility lines which are damaged, broken, or disturbed. Obtain approval from Project Manager and agency for repairs or relocations, either temporary or permanent.

D. Remove old pavements and structures, including sidewalks and driveways in accordance with requirements of Section 02221 - Removing Existing Pavements and Structures.

E. Install and operate dewatering and surface water control measures in accordance with Section 01578 - Control of Ground Water and Surface Water.

3.02 EXCAVATION

A. Earthwork. Conform to requirements of Section 02317 - Excavation and Backfill for Utilities. Use bedding as indicated on Drawings.

B. Line and Grade. Establish required uniform line and grade trench from benchmarks identified by Project Manager. Maintain this control for minimum of 100 feet behind and ahead of pipe-laying operation. Use laser beam equipment to establish and maintain proper line and grade of Work. Or use appropriately sized grade boards which are substantially supported.

C. Trench Excavation. Excavate pipe trenches to level as indicated on Standard Details. Backfill excavation with specified bedding material to level of lower one-third of pipe barrel. Tamp and compact backfill to provide bedding at indicated grade. Form bedding foundation to minimum depth of one-eighth of pipe diameter, but not less than 12 inches.

3.03 PIPE INSTALLATION

A. Install in accordance with pipe manufacturer's recommendations and as specified in this section.

B. Install pipe only after excavation is completed, bottom of trench is shaped, bedding material is installed, and trench has been approved by Project Manager.

C. Install pipe to line and grade indicated on Drawings. Place pipe so that it has continuous bearing of barrel on bedding material with no voids, and is laid in trench so interior surfaces of pipe follows grades and alignments indicated.

D. Install pipe with bells of pipe facing upstream of anticipated flow.

E. Form concentric joint with each section of adjoining pipe to prevent offsets.

F. Place and drive home newly laid sections with a sling or come-a-long winches to eliminate damage to sections. Unless otherwise approved by Project Manager, provide end protection to prevent damage while using back hoes or similar powered equipment to drive home newly laid sections.

G. Keep interior of pipe clean as installation progresses.

H. H Keep excavations free of water during construction and until final inspection.

I. When work is not in progress, cover exposed ends of pipes with pipe plug specifically designed to prevent foreign material from entering pipe.

J. For PVC Pipe:

1. Provide a minimum cover as per City Standard detail from top of pavement to top of pipe, but no less than 2 feet.

2. Accomplish transitions to different material of pipe in a manhole or inlet box. No adapter, coupling for dissimilar pipe, or saddle connections allowed.

3. Provide pipe sections in standard lengths with minimum length of 13 feet. Pipe may be field modified to shorten length no less than 4 feet, unless otherwise approved by Project Manager. Field modify pipe per manufacturer's recommendations.

4. No beveling at joint allowed. Cut to be perpendicular to longitudinal axis.

5. Provide gasketed bell and spigot joints installed per manufacturer's recommendations. Gasketed pipe joints; clean and free of debris, show no leakage after installation.

3.04 PIPE INSTALLATION OTHER THAN OPEN CUT

A. Conform to requirements of Section 02448 - Pipe and Casing Augering for Sewers where required.

B. Conform to requirements of Section 02441 - Microtunneling and Pipe-Jacking Tunnels where required.

C. Not allowed for plastic sewer pipe.

3.05 INSTALLATION OF APPURTENANCES

A. Construct manholes to conform to requirements of Sections 02081 - Cast-in-place Concrete Manholes, Section 02082 - Precast Concrete Manholes, and Section 2087 - Brick Manholes for Storm Sewers. Install frames, grate rings, and covers to conform to requirements of Section 02084 - Frames, Grates, Rings, and Covers.

B. Install PVC pipe culverts with approved end treatments. Approved end treatments include concrete headwalls, wingwalls and collars. Refer to City Standards detail for end treatment requirements.

C. Install HDPE pipe culverts with approved end treatments. Approved end treatments include concrete headwalls, wingwalls and collars. Refer to City Standards detail for end treatment requirements.

D. Install inlets, headwalls, and wingwalls to conform to requirements of Section 02632 - Cast-in-place Inlets, Headwalls, and Wingwalls and Section 02633 - Precast

Concrete Inlets, Headwalls, and Wingwalls.

E. Rehabilitate existing manholes to conform to requirements of Section 02555 – Manhole Rehabilitation. Adjust manhole covers and inlets to grade conforming to requirements of Section 02086 - Adjusting Manholes, Inlets, and Valve Boxes to Grade.

F. Dimension for Type C and Type E manholes shall be as shown on Drawings.

3.06 INSPECTION AND TESTING

A. Perform post installation television inspection in accordance with Section 02531 – Gravity Sanitary Sewers. Hand held cameras may be used in storm sewers in lieu of requirements of Paragraph 3.09 of Section 02531 – Gravity Sanitary Sewers. Clearly stencil distance markings on each joint of pipe to indicate distance from starting manhole when using hand held cameras.

3.07 BACKFILL AND SITE CLEANUP

A. Backfill trench after pipe installation is inspected and approved by Project Manager.

B. Backfill and compact soil in accordance with Section 02317 - Excavation and Backfill for Utilities.

C. Repair and replace removed or damaged pavement and sidewalks as specified in Section 02951 - Pavement Repair and Resurfacing.

D. In unpaved areas, grade surface as uniform slope to natural grade as indicated on Drawings. Provide minimum of 4 inches of topsoil and seed according to requirements of Section 02921 Hydromulch Seeding, or Section 02922 - Sodding, as required.

END OF SECTION

Section 02633

PRECAST CONCRETE INLETS, HEADWALLS, AND WINGWALLS

PART 1 G E N E R A L

1.01 SECTION INCLUDES

A. Precast concrete inlets for storm or sanitary sewers, including cast iron frame and plate or grate.

B. Precast concrete headwalls and wingwalls for storm sewers.

C. Precast junction box with lid or grate top.

1.02 MEASUREMENT AND PAYMENT

1. Unit Prices.

2. Payment for inlets is on unit price basis for each inlet installed.

3. Payment for headwalls and wingwalls is on unit price basis for each headwall and wingwall installed.

4. Payment for junction box with lid or grate top is on unit price basis for each junction box installed.

5. Payment for inlets, headwalls, wingwalls, and junction boxes includes connection of lines and furnishing and installing frames, grates, rings, and covers.

6. Refer to Section 01270 - Measurement and Payment for unit price procedures.

B. B. Stipulated Price (Lump Sum). If Contract is Stipulated Price Contract, payment for work in this Section is included in total Stipulated Price.

1.03 REFERENCES

A. ASTM C 76 - Standard Specification for Reinforced Concrete Culvert, Storm Drain, and Sewer Pipe.

1.04 SUBMITTALS

A. Conform to requirements of Section 01330 - Submittal Procedures.

B. Submit shop drawings for approval of design and construction details for precast concrete inlets, junction box headwalls, and wingwalls. Precast units differing from standard designs shown on Drawings will be rejected unless shop drawing submittals

are approved. Clearly show proposed substitution is equal or superior in every aspect to standard designs.

C. Submit manufacturers' data and details for frames, grates, rings, and covers.

1.05 STORAGE AND SHIPMENT

A. Store precast units on level blocking. Do not place loads until design strength is reached. Shipment of acceptable units may be made when 28-day strength requirements have been met.

PART 2 P R O D U C T S

2.01 MATERIALS

A. Concrete: Provide concrete for precast machine-made units meeting requirements of ASTM C 76 regarding reinforced concrete, cement, aggregate, mixture, and concrete test. Minimum 28-day compressive strength shall be 4000 psi.

B. Reinforcing Steel: Place reinforcing steel to conform to details shown on Drawings and as follows:

1. Provide positive means for holding steel cages in place throughout production of concrete units. Maximum variation in reinforcement position is plus or minus 10 percent of wall thickness or plus or minus 1/2 inch, whichever is less. Regardless of variation, maintain minimum cover of concrete over reinforcement as shown on Drawings.

2. Welding of reinforcing steel is not permitted unless noted on Drawings.

C. Mortar and Hydraulic Cement: Conform to requirements of Section 04261 - Mortar.

D. Miscellaneous Metal: Cast-iron frames and plates conforming to requirements of Section 02084 - Frames, Grates, Rings, and Covers.

2.02 SOURCE QUALITY CONTROL

A. Tolerances: Allowable casting tolerances for concrete units are plus or minus 1/4 inch from dimensions shown on Drawings. Concrete thickness in excess of that required will not constitute cause for rejection provided that excess thickness does not interfere with proper jointing operations.

B. Precast Unit Identification: Mark date of manufacture and name or trademark of manufacturer clearly on inside of inlet, headwall, or wingwall.

C. Rejection: Precast units rejected for non-conformity with these specifications and for following reasons:

1. Fractures or cracks passing through shell, except for single end crack that does not exceed depth of joint.

2. Surface defects indicating honeycombed or open texture.

3. Damaged or misshaped ends, where damage would prevent making satisfactory joint.

D. Replacement: Immediately remove rejected units from Work site and replace with acceptable units.

E. Repairs: Occasional imperfections resulting from manufacture or accidental damage may be repaired if, in opinion of Project Manager, repaired units conform to requirements of these specifications.

PART E X E C U T I O N

3.01 EXAMINATION

A. Verify lines and grades are correct.

B. Verify compacted subgrade will support loads imposed by inlets.

3.02 INSTALLATION

A. Install units complete in place to dimensions, lines, and grades as shown on Drawings.

B. Excavate in accordance with requirements of Section 02317 - Excavation and Backfill for Utilities.

C. Bed precast concrete units on foundations of firm, stable material shaped to conform to shape of unit bases.

D. Provide adequate means to lift and place concrete units.

3.03 FINISHES

A. Use hydraulic cement to seal joints, fill lifting holes and as otherwise required.

B. When box section of inlet has been completed, shape floor of inlet with mortar to conform to Drawing details.

C. Adjust cast iron inlet plate frames to line, grade, and slope shown on Drawings. Grout frame in place with mortar.

3.04 INLET WATERTIGHTNESS

A. Verify that inlets are free of leaks. Repair leaks in approved manner.

3.05 CONNECTIONS

A. Connect storm sewer leads to inlets as shown on Drawings. Seal connections inside and outside with hydraulic cement. Make connections watertight.

3.06 BACKFILL

A. Backfill area of excavation surrounding each completed inlet, headwall, or wingwall according to requirements of Section 02317 - Excavation and Backfill for Utilities.

END OF SECTION

Section 02751

CONCRETE PAVING

PART 1 G E N E R A L

1.01 SECTION INCLUDES

A. Portland cement concrete paving.

1.02 MEASUREMENT AND PAYMENT

A. Unit Prices.

1. Payment for concrete paving is on square yard basis. Separate pay items are used for each different required thickness of pavement.

2. Payment for concrete paving, high early strength, is on square yard basis.

3. Payment for pavement repair or pavement replacement for utility projects is on a square yard basis and includes base materials in accordance with Section 02951.

4. Refer to Section 01270 - Measurement and Payment for unit price procedures.

5. Refer to Paragraph 3.15, Unit Price Adjustment.

B. Stipulated Price (Lump Sum). If Contract is Stipulated Price Contract, payment for Work in this Section is included in total Stipulated Price.

1.03 REFERENCES

A. ASTM A82 - Standard Specification for Steel Wire, Plain, for Concrete Reinforcement.

B. ASTM A185 - Standard Specifications for Steel Welded Wire Fabric, Plain, for Concrete Reinforcement.

C. ASTM A497 – Standard Specification for Steel Welded Wire Reinforcement, Deformed, for Concrete.

D. ASTM A615 - Standard Specification for Deformed and Plain Billet - Steel Bars for Concrete Reinforcement.

E. ASTM C 31 - Standard Practice for Making and Curing Concrete Test Specimens in the Field.

F. ASTM C 33 - Standard Specifications for Concrete Aggregates.

G. ASTM C 39 - Standard Test Method for Compressive Strength of Cylindrical Concrete Specimens.

H. ASTM C 40 - Standard Test Method for Organic Impurities in Fine Aggregates for Concrete.

I. ASTM C 42 - Standard Test Method of Obtaining and Testing Drilled Cores and Sawed Beams of Concrete.

J. ASTM C 78 - Standard Test Method for Flexural Strength of Concrete (Using Simple Beam with Third Point Loading).

K. ASTM C 94 - Standard Specification for Ready-Mixed Concrete.

L. ASTM C 131 - Standard Test Method for Resistance to Degradation of Small-Size Coarse Aggregate by Abrasion and Impact in the Los Angeles Machine.

M. ASTM C 136 - Standard Method for Sieve Analysis of Fine and Coarse Aggregates.

N. ASTM C 138 - Standard Test Method for Unit Weight, Yield, and Air Content (Gravimetric) of Concrete.

O. ASTM C 143 - Standard Test Method for Slump of Hydraulic Cement Concrete.

P. ASTM C 150 - Standard Specification for Portland Cement.

Q. ASTM C 174 - Standard Test Method for Measuring Thickness of Concrete Elements Using Drilled Concrete Cores.

R. ASTM C 231 - Standard Test Method for Air Content of Freshly Mixed Concrete by the Pressure Method.

S. ASTM C 260 - Standard Specification for Air-Entraining Admixtures for Concrete.

T. ASTM C 494 - Standard Specification for Chemical Admixtures for Concrete.

U. ASTM C 618 - Standard Specification for Coal Fly Ash and Raw or Calcined Natural Pozzolan for use as a Mineral Admixture in Portland Cement Concrete.

V. TxDOT Tex-203-F - Sand Equivalent Test.

W. TxDOT Tex-406-A - Material Finer than 75 Öm (No. 200) Sieve In Mineral Aggregates (Decantation Test for Cement Aggregates).

1.04 SUBMITTALS

A. Conform to requirements of Section 01330 - Submittal Procedures.

B. Submit proposed mix design and test data for each type and strength of concrete in

Work. Include proportions and actual flexural strength obtained from design mixes at required test ages.

C. Submit for approval manufacturer's description and characteristics for mixing equipment, and for traveling form paver, when proposed for use.

D. Submit manufacturer's certificates giving properties of reinforcing steel. Include certificate of compliance with ASTM A 82. Provide specimens for testing when required by Project Manager.

1.05 HANDLING AND STORAGE

A. Do not mix different classes of aggregate without written permission of Project Manager.

B. Class of aggregate being used may be changed before or during Work with written permission of Project Manager. Comply new class with specifications.

C. Reject segregated aggregate. Before using aggregate whose particles are separated by size, mix them uniformly to grading requirements.

D. Reject aggregates mixed with dirt, weeds, or foreign matter.

E. Do not dump or store aggregate in roadbed.

PART 2 P R O D U C T S

2.01 MATERIALS

A. Portland Cement:

1. Sample and test cement to verify compliance with Standards of ASTM C 150, Type I or Type III.

2. Bulk cement which meets referenced standards may be used when method of handling is approved by Project Manager. When using bulk cement, provide satisfactory weighing devices.

3. Fly ash which meets standards of ASTM C 618 may be used as mineral fill when method of handling is approved by Project Manager.

B. Water: Conform to requirements for water in ASTM C 94.

C. Coarse Aggregate: Crushed stone, gravel, or combination thereof, which is clean, hard, and durable, conforms to requirements of ASTM C 33, and has abrasion loss not more than 45 percent by weight when subjected to Los Angeles Abrasion Test (ASTM C 131).

1. Maximum percentage by weight of deleterious substances shall not exceed following values:

Item	Percent by Weight of Total Sample Maximum
Clay lumps and friable particles	3.0
Material finer than 75-µm (No. 200) sieve:	
Concrete subject to abrasion	3.0*
All Other concrete	5.0*
Coal and lignite:	
Where surface appearance of concrete is of importance	0.5
All other concrete	1.0

* In case of manufactured sand, when material finer than 75-µm (No. 200) sieve consists of dust of fracture, essentially free from clay or shale, these limits may be increased to 5 and 7 percent, respectively.

2. Conform coarse aggregate (size 1 1/2 inch to No. 4 sieve) to requirements of ASTM C 33. Use gradation within following limits when graded in accordance with ASTM C 136:

Sieve Designation (Square Openings)	Percentage by Weight
Retained on 1 3/4" sieve	0
Retained on 1 1/2"sieve	0 to 5
Retained on 3/4" sieve	30 to 65
Retained on 3/8" sieve	70 to 90
Retained on No. 4 sieve	95 to 100
Loss by Decantation Test *Method Tex-406-A	1.0 maximum

* In case of aggregates made primarily from crushing of stone, when material finer than 200 sieve is dust of fracture essentially free from clay or shale as established by Part III of TxDOT Tex-406-A, percent may be increased to 1.5.

D. Fine Aggregate: Sand, manufactured sand, or combination thereof, composed of clean, hard, durable, uncoated grains, free from loams or other injurious foreign matter. Conform fine aggregate for concrete to requirements of ASTM C 33. Use gradation within following limits when graded in accordance with ASTM C 136:

Sieve Designation (Square Openings)	Percentage by Weight

Retained on 3/8" sieve	0
Retained on No. 4 sieve	0 to 5
Retained on No. 8 sieve	0 to 20
Retained on No. 16 sieve	15 to 50
Retained on No. 30 sieve	35 to 75
Retained on No. 50 sieve	65 to 90
Retained on No. 100 sieve	90 to 100
Retained on No. 200 sieve	97 to 100

1. When subjected to color test for organic impurities (ASTM C 40), fine aggregate shall not show color darker than standard color. Fine aggregate shall be subjected to Sand Equivalent Test (Tex-203-F). Sand equivalent value shall not be less than 80, unless higher value is shown on Drawings.

E. Mineral Filler: Type “C” or Type “F” fly ash of acceptable quality and meeting requirements of ASTM C 618 may be used as mineral admixture in concrete mixture. When fly ash mineral filler is used, store and inspect in accordance with ASTM C 618. Do not use fly ash in amounts to exceed 25 percent by weight of cementatious material in mix design. Cement content may be reduced when strength requirements can be met. Note: When fly ash is used, term "cement" is defined as cement plus fly ash.

F. Air Entraining Agent: Furnish air entraining agent conforming to requirements of ASTM C 260.

G. Water Reducer: Water reducing admixture conforming to requirements of ASTM C 494 may be used when required to improve workability of concrete. Amount and type of admixture is subject to approval by Project Manager.

H. Reinforcing Steel:

1. Provide new billet steel manufactured by open hearth process and conforming to ASTM A 615, Grade 60. Store steel to protect it from mechanical injury and rust. At time of placement, steel shall be free from dirt, scale, rust, paint, oil, or other injurious materials.

2. Cold bend reinforcing steel to shapes shown. Once steel has been bent, it may not be rebent.

3. Provide wire fabric conforming to ASTM A 82. Use fabric in which longitudinal and transverse wires have been electrically welded at points of intersection. Welds shall have sufficient strength not to be broken during handling or placing. Conform welding and fabrication of fabric sheets to ASTM A 185.

2.02 EQUIPMENT

A. Conform Equipment to requirements of ASTM C94.

2.03 MIXING

A. Flexural strength shall be as specified using test specimens prepared in accordance with ASTM C 31 and tested in accordance with ASTM C78 (using simple beam with third-point loading). Compressive strength shall be as specified using test specimens prepared in accordance with ASTM C 31 and tested in accordance with ASTM C 39. Determine and measure batch quantity of each ingredient, including water for batch designs and all concrete produced for Work. Mix shall conform to these specifications and other requirements indicated on Drawings.

A. Mix design to produce concrete which will have flexural strength of 500 psi at 7 days and 600 psi at 28 days. Minimum compressive strength shall be 3000 pounds per square inches for 7 days and 3500 pounds per square inches at 28 days when tested in accordance with ASTM C39. Slump of concrete shall be at least 2 inches but no more than 5 inches, when tested in accordance with ASTM C143.

1. Concrete pavement, including curb, curb and gutter, and saw-tooth curb, shall contain at least 5 1/2 sacks (94 pounds per sack) of cement per cubic yard, with not more than 6.5 gallons of water, net, per sack of cement (water-cement ratio maximum 0.57). Determine cement content in accordance with ASTM C 138. Addition of mineral filler may be used to improve workability or plasticity of concrete to limits specified.

2. Coarse dry aggregate shall not exceed 85 percent of loose volume of concrete.

3. Add air-entraining admixture to ensure uniform distribution of agent throughout batch. Base air content of freshly mixed air-entrained concrete upon trial mixes with materials to be used in Work, adjusted to produce concrete of required plasticity and workability. Percentage of air entrainment in mix shall be 4 1/2 percent plus or minus 1 1/2 percent. Determine air content by testing in accordance with ASTM C 231.

4. Use retardant when temperature exceeds 90 degrees F. Proportion as recommended by manufacturer. Use same brand as used for air-entraining agent. Add and batch material using same methods as used for air-entraining agent.

C. Use high early strength concrete pavement to limits shown on Drawings. Design to meet following:

1. Concrete Mix: Flexural strength greater than or equal to 500 psi at 72 hours.

2. Cement: Minimum of 7 sacks of cement per cubic yard of concrete.

3. Water-Cement Ratio maximum of 0.45. Slump of concrete shall a maximum of 5 inches, when tested in accordance with ASTM C 143.

4. Other requirements for proportioning, mixing, execution, testing, etc., shall be in

accordance with this Section 02751 - Concrete Paving.

PART 3 E X E C U T I O N

3.01 EXAMINATION

A. Verify compacted base is ready to support imposed loads and meets compaction requirements.

B. Verify lines and grades are correct.

3.02 PREPARATION

A. Properly prepare, shape and compact each section of subgrade before placing forms, reinforcing steel or concrete. After forms have been set to proper grade and alignment, use subgrade planer to shape subgrade to its final cross section. Check contour of subgrade with template.

B. Remove subgrade that will not support loaded form. Replace and compact subgrade to required density.

3.03 EQUIPMENT

A. Alternate equipment and methods, other than those required by this Section, may be used provided equal or better results will be obtained. Maintain equipment for preparing subgrade and for finishing and compacting concrete in good working order.

B. Subgrade Planer and Template:

1. Use subgrade planer with adjustable cutting blades to trim subgrade to exact section shown on Drawings. Select planer mounted on visible rollers which ride on forms. Planer frame must have sufficient weight so that it will remain on form, and have strength and rigidity that, under tests made by changing support from wheels to center, planer will not develop deflection of more than 1/8 inch. Tractors used to pull planer shall not produce ruts or indentations in subgrade. When slip form method of paving is used, operate subgrade planer on prepared track grade or have it controlled by electronic sensor system operated from string line to establish horizontal alignment and elevation of subbase.

2. Provide template for checking contour of subgrade. Template shall be long enough to rest upon side forms and have strength and rigidity that, when supported at center, maximum deflection shall not exceed 1/8 inch. Fit template with accurately adjustable rods projecting downward at 1 foot intervals. Adjust these rods to gauge cross sections of slab bottom when template is resting on side forms.

C. Machine Finisher: Provide power-driven, transverse finishing machine designed and operated to strike off and consolidate concrete. Machine shall have two screeds

accurately adjusted to crown of pavement and with frame equipped to ride on forms. Use finishing machine with rubber tires when it operates on concrete pavement.

D. Hand Finishing:

1. Provide mechanical strike and tamping template 2 feet longer than width of pavement to be finished. Shape template to pavement section.

2. Provide two bridges to ride on forms and span pavement for finishing expansion and dummy joints. Provide floats and necessary edging and finishing tools.

E. Burlap Drag or transverse broom for Finishing Slab: Furnish four plies of 10 ounce burlap material fastened to bridge to form continuous strip of burlap full width of pavement. Maintain contact 3 foot width of burlap material with pavement surface. Keep burlap drags clean and free of encrusted mortar.

F. Vibrators: Furnish mechanically-operated, synchronized vibrators mounted on tamping bar which rides on forms and hand-manipulated mechanical vibrators. Furnish vibrators with frequency of vibration to provide maximum consolidation of concrete without segregation.

G. Traveling Form Paver: Approved traveling form paver may be used in lieu of construction methods employing forms, consolidating, finishing and floating equipment. Meet requirements of this specification for subgrade, pavement tolerances, pavement depth, alignments, consolidation, finishing and workmanship. When traveling form paver does not provide concrete paving that meets compaction, finish, and tolerance requirements of this Specification, immediately discontinue its use and use conventional methods.

1. Equip traveling paver with longitudinal transangular finishing float adjustable to crown and grade. Use float long enough to extend across pavement to side forms or edge of slab.

2. Ensure that continuous deposit of concrete can be made at paver to minimize starting and stopping. Use conventional means of paving locations inaccessible to traveling paver, or having horizontal or vertical curvature that traveling paver cannot negotiate.

3. Where Drawings require tie bars for adjacent paving, securely tie and support bars to prevent displacement. Tie bars may be installed with approved mechanical bar inserter mounted on traveling-form paver. Replace pavement in which tie bars assume final position other than that shown on Drawings.

3.04 FORMS

A. Side Forms: Use metal forms of approved shape and section. Preferred depth of form is equal to required edge thickness of pavement. Forms with depths greater or less than required edge thickness of pavement will be permitted, provided difference

between form depth and edge thickness when not greater than 1 inch, and further provided that forms of depth less than pavement edge are brought to required edge thickness by securely attaching wood or metal strips to bottom of form, or by grouting under form. Bottom flange of form shall be same size as thickness of pavement. Aluminum forms are not allowed. Forms shall be approved by Project Manager. Length of form sections shall be not less than 10 feet and each section shall provide for staking in position with not less than 3 pins. Flexible or curved forms of wood or metal of proper radius shall be used for curves of 200 foot radius or less. Forms shall have ample strength and shall be provided with adequate devices for secure setting so that when in-place they will withstand, without visible springing or settlement, impact and vibration of finishing machine. In no case shall base width be less than 8 inches for form 8 inches or more in height. Forms shall be free from warp, bends or kinks and shall be sufficiently true to provide straight edge on concrete. Top of each form section, when tested with straight edge, shall conform to requirements specified for surface of completed pavement. Provide sufficient forms for satisfactory placement of concrete. For short radius curves, forms less than 10 feet in length or curved forms may be used. For curb returns at street intersections and driveways, wood forms of good grade and quality may be used.

B. Form Setting:

1. Rest forms directly on subgrade. Do not shim with pebbles or dirt. Accurately set forms to required grade and alignment and, during entire operation of placing, compacting and finishing of concrete, do not deviate from this grade and alignment more than 1/8 inch in 10 feet of length. Do not remove forms for at least 8 hours after completion of finishing operations. Provide supply of forms that will be adequate for orderly and continuous placing of concrete. Set forms and check grade for at least 300 feet ahead of mixer or as approved by Project Manager.

2. Adjacent slabs may be used instead of forms, provided that concrete is well protected from possible damage by finishing equipment. Do not use adjacent slabs for forms until concrete has aged at least 7 days.

3.05 REINFORCING STEEL AND JOINT ASSEMBLIES

A. Place reinforcing steel and joint assemblies and position securely as indicated on Drawings. Wire reinforcing bars securely together at intersections and splices. Bars and coatings shall be free of rust, dirt or other foreign matter when concrete is placed. Secure reinforcing steel to chairs.

B. Position pavement joint assemblies at required locations and elevations, and rigidly secure in position. Install dowel bars in joint assemblies, each parallel to pavement surface and to center line of pavement, as shown.

C. Cut header boards, joint filler, and other material used for forming joints to receive each dowel bar.

D. Secure in required position to prevent displacement during placing and finishing of

concrete.

E. Drill dowels into existing pavement, secure with epoxy, and provide paving headers as required to provide rigid pavement sections.

F. Use sufficient number of chairs for steel reinforcement bars to maintain position of bars within allowable tolerances. Place reinforcement as shown on Drawings. In plane of steel parallel to nearest surface of concrete, bars shall not vary from plan placement by more than 1/12 of spacing between bars. In plane of steel perpendicular to nearest surface of concrete, bars shall not vary from plan placement by more than 1/4 inch.

3.06 FIBROUS REINFORCING

A. Do not use fibrous reinforcing to replace structural, load-bearing, or moment-reinforcing steel.

3.07 PLACEMENT

A. Place concrete when air temperature taken in shade and away from artificial heat is above 35 degrees F and rising. Do not place concrete when temperature is below 40 degrees F and falling.

B. Place concrete within 90 minutes after initial water had been added. Remove and dispose of concrete not placed within this period.

C. Concrete slump during placement shall be 1 to 5 inches, except when using traveling-form paver, slump shall be maximum of 2 inches.

D. Deposit concrete continuously in successive batches. Distribute concrete in manner that will require as little rehandling as possible. Where hand spreading is necessary, distribute concrete with shovels or by other approved methods. Use only concrete rakes in handling concrete. At placement interruption of more than 30 minutes, place transverse construction joint at stopping point. Remove and replace sections less than 10 feet long.

E. Take special care in placing and spading concrete against forms and at longitudinal and transverse joints to prevent honeycombing. Voids in edge of finished pavement will be cause for rejection.

3.08 COMPACTION

A. Consolidate concrete using mechanical vibrators as specified herein. Extend vibratory unit across pavement, not quite touching side forms. Space individual vibrators at close enough intervals to vibrate and consolidate entire width of pavement uniformly. Mount mechanical vibrators to avoid contact with forms, reinforcement, transverse or longitudinal joints.

B. Furnish enough hand-manipulated mechanical vibrators for proper consolidation of concrete along forms, at joints and in areas not covered by mechanically controlled vibrators.

3.09 FINISHING

A. Finish concrete pavement with power-driven transverse finishing machines or by hand finishing methods.

1. Hand finish with mechanical strike and tamping template in same width as pavement to be finished. Shape template to pavement section shown on Drawings. Move strike template forward in direction of placement, maintaining slight excess of material in front of cutting edge. Make minimum of two trips over each area. Screed pavement surface to required section. Work screed with combined transverse and longitudinal motion in direction work is progressing. Maintain screed in contact with forms. Use longitudinal float to level surface.

B. On narrow strips and transitions, finish concrete pavement by hand. Thoroughly work concrete around reinforcement and embedded fixtures. Strike off concrete with strike-off screed. Move strike-off screed forward with combined transverse and longitudinal motion in direction work is progressing, maintaining screed in contact with forms, and maintaining slight excess of materials in front of cutting edge. Tamp concrete with tamping template. Use longitudinal float to level surface.

C. After completion of straightedge operation, make first pass of burlap drag or transverse broom as soon as construction operations permit and before water sheen has disappeared from surface. Follow with as many passes as required to produce desired texture depth. Permit no unnecessary delays between passes. Keep drag wet, clean and free from encrusted mortar during use.

3.10 JOINTS AND JOINT SEALING

A. Conform to requirements of Section 02752 - Concrete Pavement Joints.

3.11 CONCRETE CURING

A. Conform to requirements of Section 02753 - Concrete Pavement Curing.

3.12 TOLERANCES

A. Test entire surface before initial set and correct irregularities or undulations. Bring surface within requirements of following test and then finish. Place 10 foot straightedge parallel to center of roadway to bridge depressions and touch high spots. Do not permit ordinates measured from face of straight edge to surface of pavement to exceed 1/16 inch per foot from nearest point of contact. Maximum ordinate with 10 foot straightedge shall not exceed 1/8 inch. Grind spots in excess of required

tolerances to meet surface test requirements. Restore texture by grooving concrete to meet surface finishing specifications.

3.13 FIELD QUALITY CONTROL

A. Perform testing under provisions of Section 01454 - Testing Laboratory Services.

B. Compressive Strength Test Specimens: Make four test specimens for compressive strength test in accordance with ASTM C 31 for each 150 cubic yards or less of pavement that is placed in one day. Test two specimens at 7 days or at number of hours as directed by the Project Manager for high early strength concrete. Test remaining two specimens at 28 days. Test specimens in accordance with ASTM C 39. Minimum compressive strength shall be 3000 pounds per square inch for first two specimens and 3500 pounds per square inch at 28 days.

C. When compressive test indicates failure, make yield test in accordance with ASTM C 138 for cement content per cubic yard of concrete. When cement content is found to be less than that specified per cubic yard, increase batch weights until amount of cement per cubic yard of concrete conforms to requirements.

D. Minimum of one 4 inch core will be taken at random locations per 375 feet per 12 feet lane or 500 square yards of pavement to measure in-place depth. Measure depth in accordance with ASTM C 174. Each core may be tested for 28 day compressive strength according to methods of ASTM C 42. 28 day compressive strength of each core tested shall be a minimum of 3000 pounds per square inch.

E. Request, at option, three additional cores in vicinity of cores indicating nonconforming in-place depths at no cost to City. In-place depth at these locations shall be average depth of four cores.

F. Fill cores and density test sections with new concrete paving or non shrink grout.

3.14 NONCONFORMING PAVEMENT

A. Remove and replace areas of pavement found deficient in thickness by more than 10 percent, or that fail compressive strength tests, with concrete of thickness shown on Drawings.

B. When measurement of any core is less than specified thickness by more than 10 percent, actual thickness of pavement in this area will be determined by taking additional cores at 10 foot intervals parallel to centerline in each direction from deficient core until, in each direction, core is taken which is not deficient by more than 10 percent. Exploratory cores for deficient thickness will not be used in averages for adjusted unit price. Exploratory cores are to be used only to determine length of pavement in unit that is to be removed and replaced. Replace nonconforming pavement sections at no additional cost to City.

3.15 UNIT PRICE ADJUSTMENT

A. Unit price adjustments shall be made for in-place depth determined by cores as follows:

1. Adjusted Unit Price shall be ratio of average thickness as determined by cores to thickness bid upon, times unit price.

2. Apply adjustment to lower limit of 90 percent and upper limit of 100 percent of unit price.

3. Average depth below 90 percent but greater than 80 percent may be accepted by Project Manager at adjusted Unit Price of:

   a. Unit Price Bid - [2 x (1-ratio) x Unit Price Bid]

   b. Ratio equals average core thickness divided by thickness bid upon

   c. 0.9 ratio pays 80 percent of unit price and 0.8 ratio pays 60 percent of unit price.

4. Average depth below 80 percent will be rejected by Project Manager.

3.16 PAVEMENT MARKINGS

A. Restore pavement markings to match those existing in accordance with City of Houston standard specifications and details and Project Manager's requirements.

3.17 PROTECTION

A. Barricade pavement section to prevent use until concrete has attained minimum design strength. Cure barricade pavement section for minimum 72 hours before use. Do not open pavement to traffic until concrete is at least 10 days old. Pavement may be open to traffic earlier provided Contractor pays for testing and additional specimen once 7 day specified strength is obtained. Pavement may be opened when high early strength concrete is used meeting specified 72 hour strength.

B. High early strength concrete may be used to provide access at driveways, street intersections, esplanades and other locations approved by Project Manager.

C. On those sections of pavement to be opened to traffic, seal joints, clean pavement, and place earth against pavement edges before permitting use by traffic. Opening of pavement to traffic shall not relieve responsibility for Work.

D. Maintain concrete paving in good condition until completion of Work.

E. Repair defects by replacing concrete to full depth.

END OF SECTION

Section 02752

CONCRETE PAVEMENT JOINTS

PART 1 G E N E R A L

1.01 SECTION INCLUDES

A. Joints for concrete paving; concrete sidewalks, concrete driveways, curbs, and curb and gutters.

B. Saw-cutting existing concrete or asphalt pavements for new joints.

1.02 MEASUREMENT AND PAYMENT

A. Unit Prices.

1. Payment for street pavement expansion joints, with or without load transfer, is on linear foot basis.

2. Payment for horizontal dowels is on a unit price basis for each horizontal dowel.

3. No separate payment will be made for formed or sawed street pavement contraction joints and longitudinal weakened plane joints. Include payment in unit price for Concrete Paving.

4. No separate payment will be made for joints for Curb, Curb and Gutter, Saw-tooth Curb, Concrete Sidewalks, and Concrete Driveways. Include payment in unit price for Curb and Gutter, Concrete Sidewalks, and Concrete Driveways.

5. Payment will be made for Preformed Expansion Joints on a linear foot basis only when field conditions require that sidewalk be moved adjacent to existing concrete structure (i.e., street, back of curb, etc.).

6. Refer to Section 01270 - Measurement and Payment for unit price procedures.

B. Stipulated Price (Lump Sum). If Contract is Stipulated Price Contract, payment for work in this Section is included in total Stipulated Price.

1.03 REFERENCES

A. ASTM A 615 - Standard Specification for Deformed and Plain Billet-Steel Bars for Concrete Reinforcement.

B. ASTM D 994 - Standard Specification for Preformed Expansion Joint Filler for Concrete (Bituminous Type).

C. ASTM D 1751 - Standard Specification for Preformed Expansion Joint Filler for

Concrete Paving and Structural Construction (Nonextruding and Resilient Bituminous Types).

D. ASTM D 3405 - Standard Specification for Joint Sealants, Hot-Applied, for Concrete and Asphalt Pavements.

E. TxDOT Tex-525-C - Tests for Asphalt and Concrete Joint Sealers

1.04 SUBMITTALS

A. Conform to requirements of Section 01330 - Submittal Procedures.

B. Submit product data for joint sealing compound and proposed sealing equipment for approval.

C. Submit samples of dowel cup, metal supports, and deformed metal strip for approval. Submit manufacturer's recommendation for placing sealant(s). PART 2 PRODUCTS

2.01 BOARD EXPANSION JOINT MATERIAL

A. Filler board of selected stock. Use wood of density and type as follows:

1. Clear, all-heart cypress weighing no more than 40 pounds per cubic foot, after being oven dried to constant weight.

2. Clear, all-heart redwood weighing no more than 30 pounds per cubic foot, after being oven dried to constant weight.

2.02 PREFORMED EXPANSION JOINT MATERIAL

A. Bituminous fiber and bituminous mastic composition material conforming to ASTM D 994 and ASTM D 1751.

2.03 JOINT SEALING COMPOUND

A. Conform joint sealants to one of sealant classes described in this section.

B. Conform hot-poured rubber-asphalt compound to ASTM D 3405.

C. Two-component Synthetic Polymer.

1. Curing is to be by polymerization and not by evaporation of solvent or fluxing of harder particles.

2. Cure sufficiently at average temperature of 25 1 C (77 2 F) so as not to pick up under wheels of traffic in maximum three hours.

3. Performance requirements, when tested in accordance with TxDOT Tex-525-C, shall meet above curing times and requirements as follows:

Cold-Extruded and Cold-Pourable (Self-Leveling) Specifications	
Property	**Requirement**
Penetration, 25 C (77 F) 150 g Cone, 5 s, 0.1 mm (in.), maximum	130
Bond and Extension 50%, -29 C (-20 F), 3 cycles: • Dry Concrete Block • Steel blocks (Primed, if recommended by manufacturer) *Steel blocks shall be used when armor joints are specified	 Pass Pass
Flow at 70 C (158 F)	None
Water content % by mass, maximum	5.0
Resilience: • Original sample, % min. (cured) • Oven-aged at 70 C (158 F), % min.	 50 50
Cold-extruded material only - Cold Flow (10 minutes)	None

After bond and extension test, there shall be no evidence of cracking, separation or other opening that is over 3 millimeters (1/8 inch) deep in sealer or between sealer and test blocks.

4. Provide cold-extruded type for vertical or sloping joints.

5. Provide self-leveling type for horizontal joints.

D. Self-Leveling, Low Modulus Silicone or Polyurethane Sealant for Asphaltic Concrete and Portland Cement Concrete Joints. This shall be a single component self-leveling silicone or polyurethane material that is compatible with both asphalt and concrete pavements. The sealer shall not require a primer for bond; a backer rod shall be required which is compatible with the sealant; no reaction shall occur between rod and sealant.

When tested in accordance with TxDOT Tex-525-C, self-leveling sealant shall meet following requirements:

Self-Leveling, Low Modulus Silicone or Polyurethane Sealant	
Property	**Requirements**

Tack Free Time, 25 1 C (77 2 F), minutes	120 maximum
Nonvolatile content, % by mass	93 minimum
Tensile Strength and 24 Hour Extension Test: • Initial, 10-day cure, 25 1 C (77 2 F), kPa (psi) • After Water Immersion, kPa (psi) • After Heat Aging, kPa (psi) • After Cycling, -29 C (-20 F), 50%, 3 cycles, kPa (psi) • 24 Hour Extension	• 21 to 69 (3 to 10) • 21 to 69 (3 to 10) • 21 to 69 (3 to 10) • 21 to 69 (3 to 10) • Pass (All Specimens) After 24 hours, there shall be no evidence of cracking, separation or other opening that is over 3 mm (1/8 in.) deep at any point in the sealer or between the sealer and test blocks.

2.04 LOAD TRANSMISSION DEVICES

A. Smooth, steel dowel bars conforming to ASTM A 615, Grade 60. When indicated on Drawings, encase one end of dowel bar in approved cap having inside diameter 1/16 inch greater than diameter of dowel bar.

B. Deformed steel tie bars conforming to ASTM A 615, Grade 60.

2.05 SUPPORTS FOR REINFORCING STEEL AND JOINT ASSEMBLY

A. Employ supports of approved shape and size that will secure reinforcing steel and joint assembly in correct position during placing and finishing of concrete. Space supports as directed by Project Manager.

PART 3 E X E C U T I O N

3.01 PLACEMENT

A. When new Work is adjacent to existing concrete, place joints at same location as existing joints in adjacent pavement.

B. If limit of removal of existing concrete or asphalt pavement does not fall on existing joint, saw cut existing pavement minimum of 2 inches deep to provide straight, smooth joint surface without chipping, spalling or cracks.

3.02 CONSTRUCTION JOINTS

A. Place transverse construction joint wherever concrete placement must be stopped for more than 30 minutes. Place longitudinal construction joints at interior edges of pavement lanes using No. 6 deformed tie bars, 30 inches long and spaced 18 inches on

centers.

3.03 EXPANSION JOINTS

A. Place 3/4 inch expansion joints at radius points of curb returns for cross street intersections, or as located in adjacent pavement but no further than 80 feet apart. Use no boards shorter than 6 feet. When pavement is 24 feet or narrower, use not more than 2 lengths of board. Secure pieces to form straight joint. Shape board filler accurately to cross section of concrete slab. Use load transmission devices of type and size shown on Drawings unless otherwise specified or shown as "No Load Transfer Device." Seal with joint sealing compound.

3.04 CONTRACTION JOINTS

A. Place contraction joints at same locations as in adjacent pavement or at spaces indicated on Drawings. Place smoothed, painted and oiled dowels accurately and normal to joint. Seal groove with joint sealing compound.

3.05 LONGITUDINAL WEAKENED PLANE JOINTS

A. Place longitudinal weakened plane joints at spaces indicated on Drawings. If more than 15 feet in width is poured, longitudinal joint must be saw cut. Seal groove with joint sealing compound.

3.06 SAWED JOINTS

A. Use sawed joints as alternate to contraction and weakened plane joints. Use circular cutter capable of cutting straight line groove minimum of 1/4 inch wide. Maintain depth of one quarter of pavement thickness. Commence sawing as soon as concrete has hardened sufficiently to permit cutting without chipping, spalling or tearing and prior to initiation of cracks. Once sawing has commenced, continue until completed. Make saw cut with one pass. Complete sawing within 24 hours of concrete placement. Saw joints at required spacing consecutively in sequence of concrete placement.

B. Concrete Saw: Provide sawing equipment adequate in power to complete sawing to required dimensions and within required time. Maintain ample supply of saw blades at work site during sawing operations. Maintain sawing equipment on job during concrete placement.

3.07 JOINTS FOR CURB, CURB AND GUTTER

A. Place 3/4 inch preformed expansion joints through curb and gutters at locations of expansion and contraction joints in pavement, at end of radius returns at street intersections and driveways, and at curb inlets. Maximum spacing shall be 120-foot centers.

3.08 JOINTS FOR CONCRETE SIDEWALKS

A. Provide 3/4 inch expansion joints conforming to ASTM A 1751 along and across

sidewalk at back of curbs, at intersections with driveways, steps, and walls; and across walk at intervals not to exceed 36 feet. Provide expansion joint material conforming to ASTM D 994 for small radius curves and around fire hydrants and utility poles. Extend expansion joint material full depth of slab.

3.9 JOINTS FOR CONCRETE DRIVEWAYS

A. Provide 3/4-inch expansion joints conforming to ASTM D 1751 across driveway in line with street face of sidewalks, at existing concrete driveways, and along intersections with sidewalks and other structures. Extend expansion joint material full depth of slab.

3.10 JOINT SEALING

A. Seal joints only when surface and joints are dry, ambient temperature is above 50 degrees F and less than 85 degrees F and weather is not foggy or rainy.

B. Use joint sealing equipment in like new working condition throughout joint sealing operation, and be approved by Project Manager. Use concrete grooving machine or power-operated wire brush and other equipment such as plow, brooms, brushes, blowers or hydro or abrasive cleaning as required to produce satisfactory joints.

C. Clean joints of loose scale, dirt, dust and curing compound. The term joint includes wide joint spaces, expansion joints, dummy groove joints or cracks, either preformed or natural. Remove loose material from concrete surfaces adjacent to joints.

D. Fill joints neatly with joint sealer to depth shown. Pour sufficient joint sealer into joints so that, upon completion, surface of sealer within joint will be 1/4 inch above level of adjacent surface or at elevation as directed.

3.11 PROTECTION

A. Maintain joints in good condition until completion of Work.

B. Replace damaged joints material with new material as required by this Section.

END OF SECTION

Section 02753

CONCRETE PAVEMENT CURING

PART 1 G E N E R A L

1.01 SECTION INCLUDES

A. Curing of Portland cement concrete paving.

1.02 MEASUREMENT AND PAYMENT

A. Unit Prices.

1. No separate payment will be made for concrete curing under this Section. Include payment in unit price for Concrete Paving, Concrete Sidewalks, Concrete Driveways, Curbs, and Curb and Gutters.

2. Refer to Section 01270 - Measurement and Payment for unit price procedures.

B. Stipulated Price (Lump Sum). If Contract is Stipulated Price Contract, payment for work in this Section is included in total Stipulated Price.

1.03 REFERENCES

A. ASTM C 156 - Standard Test Method for Water Retention by Concrete Curing Materials.

B. ASTM C 171 - Standard Specifications for Sheet Materials for Curing Concrete.

C. ASTM C 309 - Standard Specifications for Liquid Membrane-Forming Compounds for Curing Concrete.

1.04 SUBMITTALS

A. Conform to requirements of Section 01330 - Submittal Procedures.

B. Submit manufacturer's product data for cover materials and liquid membrane-forming compounds.

PART 2 PRODUCTS

2.01 COVER MATERIALS FOR CURING

A. Conform curing materials to one of the following:

1. Polyethylene Film: Opaque pigmented white film conforming to requirements of ASTM C 171.

2. Waterproofed Paper: Paper conforming to requirements of ASTM C 171.

3. Cotton Mats: Single layer of cotton filler completely enclosed in cover of cotton cloth. Mats shall contain not less than 3/4 of a pound of uniformly distributed cotton filler per square yard of mat. Cotton cloth used for covering materials shall weigh not less than 6 ounces per square yard. Stitch mats so that mat will contact surface of pavement at all points when saturated with water.

2.02 LIQUID MEMBRANE-FORMING COMPOUNDS

A. Conform liquid membrane-forming compounds to ASTM C 309. Membrane shall restrict loss of water to not more than 0.55 kg/m^2 in 72 hours using test method ASTM C 156.

PART 3 E X E C U T I O N

3.01 CURING REQUIREMENT

A. Cure concrete pavement by protecting against loss of moisture for period of not less than 72 hours immediately upon completion of finishing operations. Do not use membrane curing for concrete pavement to be overlaid by asphalt concrete.

B. Failure to provide sufficient cover material shall be cause for immediate suspension of concreting operations.

3.02 POLYETHYLENE FILM CURING

A. Immediately after finishing surface, and after concrete has taken its initial set, apply water in form of fine spray. Cover surface with polyethylene film so film will remain in direct contact with surface during specified curing period. B. Cover entire surface and both edges of pavement slab. Overlap joints in film sheets minimum of 12 inches. Immediately repair tears or holes occurring during curing period by placing acceptable moisture-proof patches or replacing.

3.03 WATERPROOFED PAPER CURING

A. Immediately after finishing surface, and after concrete has taken its initial set, apply water in form of fine spray. Cover surface with waterproofed paper so paper will remain in direct contact with surface during specified curing period.

B. Prepare waterproofed paper to form blankets of sufficient width to cover entire surface and both edges of pavement slab, and not be more than 60 feet in length. Overlap joints in blankets caused by joining paper sheets not less than 5 inches and securely seal with asphalt cement having melting point of approximately 180 degrees F. Place blankets to secure overlap of at least 12 inches. Immediately repair tears or holes appearing in paper during curing period by cementing patches over defects.

3.04 COTTON MAT CURING

A. Immediately after finishing surface, and after concrete has taken its initial set, completely cover surface with cotton mats, thoroughly saturated before application, maintaining contact with surface of pavement equally at all points.

B. Keep mats on pavement for specified curing period. Keep mats saturated so that, when lightly compressed, water will drip freely from them. Keep banked earth or cotton mat covering edges saturated.

3.05 LIQUID MEMBRANE-FORMING COMPOUNDS

A. Immediately after free surface moisture, and after concrete has dispersed, apply liquid membrane-forming compound in accordance with manufacturer's instructions.

B. Moisten concrete by water fogging prior to application of membrane when surface has become dry.

C. Seal concrete surface with single coat at rate of coverage recommended by manufacturer and directed by Project Manager, but not less than one gallon per 200 square feet of surface area.

3.06 TESTING MEMBRANE

A. Treated areas will be visually inspected for areas of lighter color of dry concrete as compared to dump concrete. Test suspected areas by placing few drops of water on surface. Membrane passes test when water stands in rounded beads or small pools which can be blown along surface of concrete without wetting surface.

B. Reapply membrane compound immediately at no cost to City when membrane fails above test.

END OF SECTION

Section 02754

CONCRETE DRIVEWAYS

PART 1 G E N E R A L

1.01 SECTION INCLUDES

A. Portland cement concrete driveways.

1.02 MEASUREMENT AND PAYMENT

A. Unit Prices.

1. Payment for concrete driveways is on square foot basis, including excavation and stabilize subgrade .

2. No payment will be made for work in areas where driveway has been removed or replaced for Contractor's convenience.

3. Refer to Section 01270 - Measurement and Payment for unit price procedures.

B. Stipulated Price (Lump Sum). If Contract is Stipulated Price Contract, payment for Work in this Section is included in total Stipulated Price.

PART 2 P R O D U C TS

2.01 MATERIALS

A. Concrete: Conform to material and proportion requirements for concrete of Section 02751 - Concrete Paving.

B. Reinforcing Steel: Conform to material requirements for reinforcing steel of Section 02751 - Concrete Paving.

C. Preformed Expansion Joint Material: Conform to material requirements for preformed expansion joint material of Section 02752 - Concrete Pavement Joints.

D. Expansion Joint Filler: Conform to material requirements for expansion joint material of Section 02752 - Concrete Pavement Joints.

E. Subgrade Materials: Conform to subgrade material requirements of Section 02336 - Lime Stabilized Subgrade, Section 02337 - Lime/Fly-Ash Stabilized Subgrade, or Section 02338 - Portland Cement Stabilized Subgrade.

PART 3 E X E C U T I O N

3.01 PREPARATION

A. Prepare subgrade in accordance with applicable portions of Section 02336 - Lime Stabilized Subgrade, Section 02337 - Lime/Fly-Ash Stabilized Subgrade, and Section 02338 - Portland Cement Stabilized Subgrade.

3.02 PLACEMENT

A. Place and finish concrete in accordance with applicable portions of Section 02751 - Concrete Paving.

3.03 JOINTS

A. Install joints in concrete driveway in accordance with Section 02752 - Concrete Pavement Joints.

3.04 CONCRETE CURING

A. Cure concrete driveway in accordance with Section 02753 - Concrete Pavement Curing.

3.05 PROTECTION

A. Conform to applicable requirements of Section 02753 - Concrete Pavement Curing.

END OF SECTION

Section 02771

CURB, CURB AND GUTTER, AND HEADERS

PART 1 G E N E R A L

1.01 SECTION INCLUDES

A. Reinforced concrete curb, reinforced monolithic concrete curb and gutter, and mountable curb.

B. Paving headers and railroad headers poured monolithically with concrete base or pavement.

1.02 MEASUREMENT AND PAYMENT

A. Unit Prices.

1. Payment for curbs, curbs and gutter, and esplanade curbs is on linear foot basis measured along face of curb.

2. Payment for 3 foot concrete valley gutter is on a linear foot basis.

3. Payment for mountable concrete curbs is on a square foot basis.

4. Payment for concrete paving headers and concrete railroad headers is on a linear foot basis.

5. Payment for headers is on linear foot basis measured between lips of gutters adjacent to concrete base and measured between backs of curbs adjacent to concrete pavement.

6. Refer to Section 01270 - Measurement and Payment for unit price procedures. B. Stipulated Price (Lump Sum). If Contract is Stipulated Price Contract, payment for work in this Section is included in total Stipulated Price.

1.03 SUBMITTALS

A. Conform to requirements of Section 01330 - Submittal Procedures. B. Submit details of proposed form work for approval.

PART 2 P R O D U C T S

2.01 MATERIALS

A. Concrete: Conform to material and proportion requirements for concrete of Section 02751 - Concrete Paving.
B. Reinforcing Steel: Conform to material requirements for welded wire fabric of Section

02751 - Concrete Paving.

C. Grout: Nonmetallic, nonshrink grout containing no chloride producing agents conforming to following requirements.

1. Compressive strength a. at 7 days: 3500 psi b. at 28 days: 8000 psi

2. Initial set time: 45 minutes 3. Final set time: 1.5 hours

D. Preformed Expansion Joint Material: Conform to material requirements for preformed expansion joint material of Section 02752 - Concrete Pavement Joints.

E. Expansion Joint Filler: Conform to material requirements for expansion joint filler of Section 02752 - Concrete Pavement Joints.

F. Mortar: Mortar finish composed of one part Portland cement and 1 1/2 parts of fine aggregate. Use only when approved by Project Manager.

PART 3 E X E C U T I O N

3.01 PREPARATION

A. Prepare subgrade in accordance with applicable portions of sections on excavation and fill, embankment, and subgrade and roadbed.

3.02 PLACEMENT

A. Guideline: Set to follow top line of curb. Attach indicator to provide constant comparison between top of curb and guideline. Ensure flow lines for monolithic curb and gutters conform to slopes indicated on Drawings.

B. Forms: Brace to maintain position during pour. Use metal templates cut to section shown on Drawings.

C. Reinforcement: Secure in position so that steel will remain in place throughout placement. Reinforcing steel shall remain at approximate center of base or pavement as indicated on Drawings.

D. Joints: Place in accordance with Section 02752 - Concrete Pavement Joints. Place dummy groove joints at to match concrete pavement joints at right angles to curb lines. Cut dummy grooves 1/4 inch deep using approved edging tool.

E. Place concrete in forms to required depth. Consolidate thoroughly. Do not permit rock pockets in form. Entirely cover top surfaces with mortar.

3.03 MANUAL FINISHING

A. After concrete is in place, remove front curb forms. Form exposed portions of curb, and of curb and gutter, using mule which conforms to curb shape, as shown on Drawings.

B. Thin coat of mortar may be worked into exposed face of curb using mule and two-handled wooden darby at least 3 feet long.

C. Before applying final finish move 10 foot straightedge across gutter and up curb to back form of curb. Repeat until curb and gutter are true to grade and section. Lap straightedge every 5 feet.

D. Steel trowel finish surfaces to smooth, even finish. Make face of finished curb true and straight.

E. Edge outer edge of gutter with 1/4 inch edger. Finish edges with tool having 1/4 inch radius.

F. Finish visible surfaces and edges of finished curb and gutter free from blemishes, form marks and tool marks. Finished curb or curb and gutter shall have uniform color, shape and appearance.

3.04 MECHANICAL FINISHING

A. Mechanical curb forming and finishing machines may be used instead of, or in conjunction with, previously described methods, when approved by Project Manager. Use of mechanical methods shall provide specified curb design and finish.

3.05 CURING

A. Immediately after finishing operations, cure exposed surfaces of curbs and gutters in accordance with Section 02753 - Concrete Pavement Curing.

3.06 TOLERANCES

A. Top surfaces of curb and gutter shall have uniform width and shall be free from humps, sags or other irregularities. Surfaces of curb top, curb face and gutter shall not vary more than 1/8 inch from edge of straightedge laid along them, except at grade changes.

3.07 PROTECTION

A. Maintain curbs and gutters in good condition until completion of Work.

B. Replace damaged curbs and gutters to comply with this Section.

END OF SECTION

Section 02775

CONCRETE SIDEWALKS

PART 1 G E N E R A L

1.01 SECTION INCLUDES

A. Reinforced concrete sidewalks.

B. Wheelchair ramps.

C. Reinforced slope paving.

1.02 MEASUREMENT AND PAYMENT

A. Unit Prices.

1. Payment for concrete sidewalks is on square foot basis.

2. No payment will be made for work outside these limits or in areas where driveway has been removed or replaced for Contractor's convenience.

3. Payment for wheelchair ramps of each type specified is on square foot basis. Removal and replacement of existing sidewalk, curb or curb and gutter and saw-cutting is paid by unit cost for each item. Sodding will be paid one foot on each side of sidewalk unless otherwise noted. Staining of wheelchair ramps is included in cost of ramp.

4. Refer to Section 01270 - Measurement and Payment for unit price procedures.

B. Stipulated Price (Lump Sum). If Contract is Stipulated Price Contract, payment for work in this Section is included in total Stipulated Price.

1.03 REFERENCES

A. ASTM C 31 - Standard Practice for Making and Curing Concrete Test Specimens in Field.

B. ASTM C 39 - Standard Test Method for Compressive Strength of Cylindrical Concrete Specimens.

C. ASTM C 42 - Test Method for Obtaining and Testing Drilled Cores and Sawed Beams of Concrete.

D. ASTM C 138 - Standard Test Method for Unit Weight, Yield, and Air Content (Gravimetric) of Concrete.

E. ASTM C 143 - Standard Test Method for Slump of Hydraulic Cement Concrete.

F. ASTM C 172 - Standard Practice for Sampling Freshly Mixed Concrete.

G. ASTM D 698 - Standard Test Methods for Laboratory Compaction Characteristics of Soil Using Standard Effort (12,400 ft-lbf/ft^3 (600 kN-m/m^3).

H. Texas Accessibility Standards of Architectural Barriers Act, Article 9102, Texas Civil Statues.

1.04 SUBMITTALS

A. Conform to requirements of Section 01330 - Submittal Procedures.

B. Submit certified testing results and certificates of compliance.

PART 2 P R O D U C T S

2.01 MATERIALS

A. Concrete: Conform to material and proportion requirements for concrete of Section 02751 - Concrete Paving.

B. Reinforcing Steel: Conform to material requirements of Section 02751 - Concrete Paving for reinforcing steel. Use No. 3 reinforcing bars.

C. Preformed Expansion Joint Material: Conform to material requirements for preformed expansion joint material of Section 02752 - Concrete Pavement Joints.

D. Expansion Joint Filler: Conform to material requirements for expansion joint material of Section 02752 - Concrete Pavement Joints.

E. Forms: Use straight, unwarped wood or metal forms with nominal depth equal to or greater than proposed sidewalk thickness. The use of 2 inch by 4 inch lumber as forms will not be allowed.

F. Sand Bed: Conform to material requirements for bank run sand of Section 02320 - Utility Backfill Materials.

G. Sodding: Conform to material requirements for sodding of Section 02922 - Sodding.

H. Coloring for wheelchair ramps: Conform to material requirements for colored concrete of Section 02761 - Colored Concrete for Medians and Sidewalks. Color shall be Brick Red or as shown on the drawings.

PART 3 E X E C U T I O N

3.01 REPLACEMENT

A. Replace sidewalks and slope paving which are removed or damaged during construction with thickness and width equivalent to one removed or damaged, unless otherwise shown on Drawings. Finish surface (exposed aggregate, brick pavers, etc.) to match existing sidewalk.

B. Provide replaced and new sidewalks with wheelchair ramps when sidewalk intersects curb at street or driveway.

3.02 PREPARATION

A. Identify and protect utilities which are to remain.

B. Protect living trees, other plant growth, and features designated to remain.

C. Conduct clearing and grubbing operations in accordance with Section 02233 - Clearing and Grubbing.

D. Excavate subgrade 6 inches beyond outside lines of sidewalk. Shape to line, grade and cross section. For soils with plasticity index above 40 percent, stabilize soil with lime in accordance with Section 02336 - Lime-Stabilized Subgrade. Compact subgrade to minimum of 90 percent maximum dry density at optimum to 3 percent above optimum moisture content, as determined by ASTM D 698.

E. Immediately after subgrade is prepared, cover with compacted sand bed to depth as shown on Drawings. Lay concrete when sand is moist but not saturated.

3.03 PLACEMENT

A. Setting Forms: Straight, unwarped wood or metal forms with nominal depth equal to or greater than proposed sidewalk thickness. Use of 2 by 4's as forms will not be allowed. Securely stake forms to line and grade. Maintain position during concrete placement.

B. Reinforcement:

1. Install reinforcing bars.

2. Install reinforcing steel as shown on the drawings. Lay longitudinal bars in walk continuously, except through expansion joints.

3. Use sufficient number of chairs to support reinforcement in manner to maintain reinforcement in center of slab vertically during placement.

4. Drill dowels into existing paving, sidewalk and driveways, secure with epoxy, and provide headers as required.

5. Use sufficient number of chairs for steel reinforcement bars to maintain position of bars within allowable tolerances. Place reinforcement as shown on

Drawings. In plane of steel parallel to nearest surface of concrete, bars shall not vary from plan placement by more than 1/12 of spacing between bars. In plane of steel perpendicular to nearest surface of concrete, bars shall not vary from plan placement by more than 1/4 inch.

C. C. Expansion Joints: Install expansion joints with load transfer units in accordance with Section 02752 - Concrete Pavement Joints.

D. Place concrete in forms to specified depth and tamp thoroughly with "jitterbug" tamp, or other acceptable method. Bring mortar to surface.

E. Strike off to smooth finish with wood strike board. Finish smoothly with wood hand float. Brush across sidewalk lightly with fine-haired brush.

F. Apply coating to wheelchair ramp with contrasting color in accordance with Section 02761 - Colored Concrete for Medians and Sidewalks.

G. Unless otherwise indicated on Drawings, mark off sidewalk joints 1/8 inch deep, at spacing equal to width of walk. Use joint tool equal in width to edging tool.

H. Finish edges with tool having 1/4 inch radius.

I. After concrete has set sufficiently, refill space along sides of sidewalk to one-inch from top of walk with suitable material. Tamp until firm and solid, place sod as applicable. Dispose of excess material in accordance with Section 01576 - Waste Material Disposal. Repair driveways and parking lots damaged by sidewalk excavation in accordance with Section 02951 - Pavement Repair and Resurfacing.

3.04 CURING

A. Conform to requirements of Section 02753 - Concrete Pavement Curing.

3.05 FIELD QUALITY CONTROL

A. Testing will be performed under provisions of Section 01454 - Testing Laboratory Services.

B. Compressive Strength Test Specimens: Four test specimens for compressive strength test will be made in accordance with ASTM C 31 for each 30 cubic yards or less of sidewalk that is placed in one day. Two specimens will be tested at 7 days. Remaining two specimens will be tested at 28 days. Specimens will be tested in accordance with ASTM C 39. Minimum compressive strength: 2500 psi at 7 days and 3000 psi at 28 days.

C. Yield test for cement content per cubic yard of concrete will be made in accordance with ASTM C 138. When cement content is found to be less than that specified per cubic yard, reduce batch weights until amount of cement per cubic yard of concrete conforms to requirements.

D. If the Contractor places concrete without notifying the laboratory, the City will have the concrete tested by means of core test as specified in ASTM C 42. When concrete does not meet specification, cost of test will be deducted from payment.

E. Sampling of fresh concrete shall be in accordance with ASTM C 172.

F. Take slump tests when cylinders are made and when concrete slump appears excessive.

G. Concrete shall be acceptable when average of two 28 day compression tests is equal to or greater than minimum 28 day strength specified.

H. If either of two tests on field samples is less than average of two tests by more than 10 percent, that entire test shall be considered erratic and not indicative of concrete strength. Core samples will be required of in-place concrete in question.

I. If 28 day laboratory test indicates that concrete of low strength has been placed, test concrete in question by taking cores as directed by Project Manager. Take and test at least three representative cores as specified in ASTM C 42 and deduct cost from payment due.

3.06 NONCONFORMING CONCRETE

A. Remove and replace areas that fail compressive strength tests, with concrete of thickness shown on Drawings.

B. Replace nonconforming sections at no additional cost to City.

3.07 PROTECTION

A. Maintain newly place concrete in good condition until completion of Work.

B. Replace damaged areas.

END OF SECTION

Section 02911

TOPSOIL

PART 1 G E N E R A L

1.01 SECTION INCLUDES

A. Furnishing and placing topsoil for finish grading and for seeding, sodding, and planting.

1.02 MEASUREMENT AND PAYMENT

A. Unit Prices.

1. No separate payment will be made for topsoil under this Section. Include payment in Section 02922 - Sodding.

2. Refer to Section 01270 - Measurement and Payment for unit price procedures.

B. Stipulated Price (Lump Sum). If the Contract is a Stipulated Price Contract, payment for work in this Section is included in the total Stipulated Price.

PART 2 P R O D U C T S

2.01 TOPSOIL

A. Topsoil shall be fertile, friable, natural sandy loam surface soil obtained from excavation or borrow operations having the following characteristics:

1. pH value of between 5.5 and 6.5

2. Liquid limit: 50 or less

3. Plasticity index: 20 or less.

4. Gradation: maximum of 10 percent passing the No. 200 sieve.

B. Topsoil shall be reasonably free of subsoil, clay lumps, weeds, non-soil materials, and other litter or contamination. Topsoil shall not contain roots, stumps, and stones larger than 2 inches.

C. Obtain topsoil from naturally well-drained areas where topsoil occurs at a minimum depth of 4 inches and has similar characteristics to that found at the placement site. Do not obtain topsoil from areas infected with a growth of, or reproductive parts of nut grass or other noxious weeds.

PART 3 E X E C U T I O N

3.01 EXAMINATION

A. Verify that excavation and embankment operations have been completed to correct lines and grades.

3.02 PLACEMENT

A. For areas to be seeded or sodded, scarify or plow existing material to a minimum depth of 4 inches, or as indicated on the Drawings. Remove vegetation and foreign inorganic material. Place 4 inches of topsoil on loosened material and roll lightly with an appropriate lawn roller to consolidate topsoil.

B. Increase depth of topsoil to 6 inches when placed over sand bedding and backfill materials specified in Section 02320 - Utility Backfill Material.

C. For areas to receive shrubs or trees, excavate existing material and place topsoil to the depth and dimensions shown on the Drawings.

D. Remove spilled topsoil from curbs, gutters, and, paved areas and dispose of excess topsoil in accordance with requirements of Section 01576 - Waste Material Disposal.

3.04 PROTECTION

A. Protect topsoil from wind and water erosion until planting is completed.

END OF SECTION

Section 02922

SODDING

PART 1 G E N E R A L

1.01 SECTION INCLUDES

A. Restoration of existing lawn areas disturbed by construction shall be by installation of new sod.

B. Planting of sod within areas designated on Drawings for purpose of surface stabilization, channel stabilization or vegetation buffer strips.

C. Sod is defined as blocks, squares, strips of turfgrass, and adhering soil used for vegetative planting. To be placed edge to edge for complete coverage.

D. Lawn is defined as ground covered with fine textured grass kept neatly mowed.

1.02 MEASUREMENT AND PAYMENT

A. Unit Prices.

1. Payment for sodding is on square yard basis.

2. For utility construction, no separate payment will be made for sodding. Include payment in section 01740 under site restoration.

3. Refer to Section 01270 - Measurement and Payment for unit price procedures.

B. Stipulated Price (Lump Sum). If Contract is Stipulated Price Contract, payment for work in this Section is included in total Stipulated Price.

1.03 SUBMITTALS

A. Conform to requirements of Section 01330 - Submittal Procedures.

1.04 QUALITY ASSURANCE

A. Sod only when weather and soil conditions are deemed by Project Manager to be suitable for proper placement.

B. B Water and fertilize new sod.

C. Guarantee sod to be growing 30 days after substantial completion.

D. Maintenance Period:

1. Begin maintenance immediately after each section of grass sod is installed and continue for 30 day period from date of substantial completion.

2. Resod unacceptable areas.

3. Water, fertilize, control disease and insect pests, mow, edge, replace unacceptable materials, and perform other procedures consistent with good horticultural practice to ensure normal, vigorous and healthy growth. Install disease control within guidelines set forth by Structural Pest Control Board of the State of Texas.

E. Notify Project Manager 10 days before end of maintenance period for inspection.

PART 2 P R O D U C T S

2.01 SOD

A. Species: Bermuda (Cynodon Dactylon), Buffalo (Buchloe Dactyloides), or St. Augustine (Stenotaphrum Secundatum) Gulf Coast variety to match existing sod.

B. Contents: 95 percent permanent grass suitable to climate in which it is to be placed; not more than 5 percent weeds and undesirable grasses; good texture, free from obnoxious grasses, roots, stones and foreign materials.

C. Size: 12 inch wide strips, uniformly 2 inches thick with clean-cut edges.

D. Sod is to be supplied and maintained in healthy condition as evidenced by grass being normal green color.

2.02 FERTILIZER

A. Available nutrient percentage by weight: 12 percent nitrogen, 4 percent phosphoric acid, and 8 percent potash; or 15 percent nitrogen, 5 percent phosphoric acid, and 10 percent potash.

2.03 WEED AND INSECT TREATMENT

A. Provide acceptable treatment to protect sod from weed and insect infestation. Submit treatment method to Project Manager for approval. Install insect and disease control within guidelines set forth by Structural Pest Control Board of the State of Texas.

2.04 WATER

A. Potable, available on-site through Contractor's water trucks. Contractor may use City of Houston hydrants when water use is measured through Contractor's meter. Do not use private resident's water.

2.05 BANK SAND

A. Free of clay lumps, roots, grass, salt or other foreign material.

PART 3 E X E C U T I O N

3.01 PREPARATION

A. Verify that soil placement and compaction have been satisfactorily completed. Verify that soil is within allowable range of moisture content.

B. Top soil shall be free of weeds and foreign material immediately before sodding.

C. Do not start work until conditions are satisfactory. Do not start work during inclement or impending inclement weather.

D. Rake areas to be sodded smooth, free from unsightly variations, bumps, ridges or depressions.

E. Spread 2 inch layer of bank sand over areas to be sodded prior to planting of sod.

F. Apply fertilizer at rate of 25 pounds per 1000 square feet. Apply after raking soil surface and not more than 48 hours prior to laying sod. Mix thoroughly into upper 2 inches of soil. Lightly water to aid in dissipation of fertilizer.

3.02 APPLICATION

A. Full Sodding: Lay sod with closely fitted joints leaving no voids and with ends of sod strips staggered. Lay sod within 24 hours of harvesting.

B. On slopes 2:1 and steeper, lay sod perpendicular to slope and secure every row with wooden pegs at maximum 2 feet on center. Drive pegs flush with soil portion of sod.

C. Prior to placing sod, on slopes 3:1 or where indicated, place Hold/Gro or Roll Lite or equal over topsoil. Securely anchor in place with posts sunk firmly into ground at maximum 16 feet on center along pitch of slope and equal to width of wire mesh horizontally across slopes.

D. After sod is laid, irrigate thoroughly to secure 6-inch minimum penetration into soil below sod.

E. Tamp and roll sod with approved equipment to eliminate minor irregularities and to form close contact with soil bed immediately after planting and watering. Submit type of tamping and rolling equipment to be used to Project Manager for approval, prior to construction.

3.03 MAINTENANCE

A. Watering:

1. Water lawn areas once a day with minimum 1/2 inch water for first 3 weeks after area is sodded.

2. After 3 week period, water twice a week with 3/4 inch of water each time unless comparable amount has been provided by rain.

3. Make weekly inspections to determine moisture content of soil unless soil is in frozen condition.

4. Water in afternoon or at night to enable soil to absorb maximum amount of water with minimum evaporation.

B. Mowing:

1. Mow sod at intervals which will keep grass height from exceeding 3 1/2 inches.

2. Set mower blades at 2 1/2 inches.

3. Do not remove more than one-half of grass leaf surface.

4. Mow sodded areas requiring mowing within 1 month after installation with light-weight rotary type mower. Mow sod only when dry and not in saturated or soft condition.

5. Remove grass clippings during or immediately after mowing.

C. Fertilizer and Pest Control:

1. Evenly spread fertilizer composite at rate of 40 pounds per 5000 square feet or as recommended by manufacturer. Do not place fertilizer until 2 weeks after placement of sod.

2. Restore bare or thin areas by topdressing with mix of 50 percent sharp sand and 50 percent sphagnum peat moss.

3. Apply mixture 1/4 to 1/2 inch thick.

4. Treat areas of heavy weed and insect infestation as recommended by treatment manufacturer.

D. Restrict all traffic from sodded areas until sod is established or for minimum 10 days during growing season. Use wood lath and plastic tape to cordon sodded areas. Maintain tape and lath throughout for minimum 30 days during growing season.

3.04 CLEANUP

A. During course of planting, remove excess and waste materials; keep lawn areas clean and take precautions to avoid damage to existing structures, plants, grass, and streets.

B. Remove barriers, signs, and other Contractor material and equipment from project site at termination of establishment period.

C. Dispose of unused materials and rubbish in accordance with Section 01576 - Waste Material Disposal.

END OF SECTION

SPECIFICATION WP-200

FIBERGLASS BUILDING

PART 1 – GENERAL

1. 1 SECTION INCLUDES

A. This section includes the furnishing and installation of the required fiberglass buildings for the housing of chemical feed equipment and storage of chemicals including all labor, materials, tools, equipment and related items.

1.2 MEASUREMENT AND PAYMENT

A. Payment for the fiberglass building shall be lump sum including, but not limited to, all components of the building such as the foundation, electrical components, and heaters/fans.

1. 3 SUBMITTALS

A. Submittals shall be accordance with the requirements of the contract documents.

B. Shop drawings shall include, but not be limited to the following items:

1. Manufacturer's descriptive literature, illustrations and other material as may be deemed necessary for proper appraisal of the proposed building.

2. Drawings shall show the configuration of the building with overall dimensions, locations of the door, louver, fan, equipment board and electrical components including a wiring schematic and mounting details.

3. Drawings shall include both plans and elevations.

4. Technical data on equipment to be furnished with the building including the lights, louvers, fans and panic hardware.

5. Any additional information requested by the Engineer in order for the Engineer to determine that the proposed equipment will provide a complete and working system and meet the requirements of the contract documents.

1.4 QUALITY ASSURANCE

A. All materials and equipment furnished for this project shall be new.

B. The building shall be designed in accordance with appropriate building codes in effect for the area where the building is to be installed.

C. Acceptable Manufacturers:

1. Associated Fiberglass

2. Warminster

D. The manufacturer of the buildings shall guarantee for 12 months from the date of substantial completion that all items furnished shall be free from faults in materials and workmanship. The manufacturer shall furnish replacement parts and provide labor for any defective component during the warranty period.

PART 2- PRODUCTS

2. 1 BUILDING STRUCTURES

A. Manufacture buildings to the dimensions indicated on the drawings. Buildings shall be of molded fiberglass construction, factory pre-assembled to make a bonded unit with no external seams or joint covers.

B. Furnish buildings with a 3” wide external mounting flange.

C. Construct walls and roof of sandwich construction consisting of 1/8” fiberglass skins and 1” thick rigid isocyanurate foam core.

D. The door shall be of fiberglass sandwich construction 1-3/4” thick and be fumished with the following:

1. 12” by 18” window.

2. Open to the outside and be equipped with aluminum or stainless steel panic hardware.

3. The door is not to be furnished with an automatic closing device.

4. Locking mechanism for securing the building.

5. The door shall have a kick stand to hold the door open.

2. 2 ACCESSORIES

A. The building shall be pre-wired with 12 ga. wiring in U.L. listed non metallic flexible, liquid tight conduit and a 125A circuit panel in a NEMA 3R thermoplastic enclosure.

B. The following accessories shall be furnished with each building:

1. An FRP corrosion proof intake fan capable of a minimum of a complete air changes every three (3) minutes. The FRP intake fan shall be mounted high on the wall. The intake fan shall be operated by an external switch. The fan shall also turn on when ever the door is opened regardless of the position of the external switch.

2. A screened FRP corrosion proof louver sized to operate with the intake fan. The louver shall be mounted low on the wall.

3. An electric heater with thermostat capable of maintaining a minimum temperature of 65 degrees F inside the building when the outside temperature is at 25 degrees F.

4. Interior vapor resistant lighting. Interior lighting shall be activated by an external switch.

5. A minimum of 3 duplex 120V GFI outlets.

6. Equipment mounting board laminated in the wall with the FRP.

PART 3 - EXECUTION

3. 1 INSTALLATION

A. Install in accordance with manufacturers installation instructions.

B. Anchor the building securely to the slab.

END OF SECTION

SPECIFICATION 210
WELDED STEEL GROUND STORAGE TANK

1.0 SCOPE OF WORK: The Contractor shall furnish and install one (1) welded steel ground storage tank complete with all related equipment, of the size and capacity as shown on the plans and as specified herein.

2.0 STANDARD SPECIFICATION: The welded steel ground storage tank shall conform to the most recent revision of ANSI/AWWA specifications D100.

3.0 DIAMETER AND HEIGHT: The minimum inside diameter of the tank shall be 74 feet. The height of the tank wall shall be 32 feet to give minimum working volume below the overflow weir of 997,000 gallons.

4.0 TYPE OF CONSTRUCTION: The structure shall consist of a welded steel ground storage tank set on a sand-filled concrete ringwall as shown on the plans and specified herein. Rafters shall be fully seal-welded.

5.0 STRENGTH AND STABILITY: The thickness of the plates and type of joints shall be sized to transmit the stresses safely when the tank is full. Wind stresses shall be included in the design (based on 125 M.P.H. exposure C wind speed from any direction). Complete detailed drawings clearly showing the dimensions of all parts, methods of construction, connections, openings, and design calculations, etc., shall be submitted to the Engineer for approval. Design should be based on most current edition of **ASCE 7-05** – Minimum Design Loads for Buildings and Other Structures.

6.0 FOUNDATION: The foundation shall consist of a sand filled reinforced concrete ringwall as shown on the drawings. Unless otherwise noted, the entire foundation area shall be scarified to a depth of six (6) inches and the subgrade compacted to 95% standard Proctor Density.

The sand fill shall be placed in six (6) inch lose lifts and compacted to 95% Standard Proctor Density at optimum moisture after the concrete ring has been constructed. The sand shall be free of clay lumps and any deleterious materials. The grain size of sands used for backfill shall be such that not more than 10% is retained on a 200 mesh sieve. The concrete ring shall be constructed of Class A reinforced concrete to the dimensions shown on the plans.

7.0 PIPE CONNECTIONS AND APPURTENANCES: The tank shall include all pipe connections and appurtenances as shown on the drawings as follows:

a) One (1) 16 inch double goose neck roof vent with No. 16 mesh A-316 stainless steel or FRP screen over vent openings.
b) One (1) 16 inch inlet roof connection (well water).

c) One (1) 6 inch inlet roof connection (treated system water).

d) One (1) 16 inch overflow and drain with a hinged and weighted cover that has no gaps over 1/16 inch. Pipe shall not be subject to submergence

e) One (1) 16 inch pump suction pipe.

f) One (1) 4' x 4' shell manway as per API Std. 650 with Davit.

g) One (1) 30 inch Diameter flanged manway.

h) Two (2) 30" x 30" Roof Hatches with lockable hasp and handle.

i) One (1) Exterior Ladder with safety cage enclosure meeting OSHA standards.

j) One (1) Interior Ladder meeting OSHA standards.

k) Handrails along the extremity of the tank a distance of 10 foot measured from each side of the Exterior Ladder.

l) One (1) 4-1/2" Diameter level indicator gauge graduated in feet and tenths of a foot.

m) One (1) 1 inch sampling tap assembly with hose bib.

n) One (1) 1 inch outlet with coupling.

o) Welded Steel roof sloped to prevent water ponding at a slope no less than 0.75 inch per foot.

8.0 FINISHING AND PAINTING: Remove all weld sag, weld splatter, mill scale, oil, grease, dirt, etc. from the interior and exterior of tank surfaces. Grind all welds, edges and corners even. All ground storage tank coatings shall be NSF Standard 61 certified and meet requirements in Section WP-225 Painting. Roof shall have a non-skid surface as shown on the plans.

9.0 TESTING: Following completion of erection, the tank shall be inspected and tested in accordance with the latest AWWA D100 specifications. The Contractor shall provide the x-rays, and the x-rays shall be come property of the Owner. After approved tank welds, the tank shall be tested for liquid tightness and settlement by filling the tank to its overflow elevation, as outlined in geotechnical report. Water required for testing will be furnished by the Owner without charge.

10.0 CLEANING AND DISINFECTION: The tank shall be cleaned and disinfected before being placed in service according to Section WP-275 of these specifications.

11.0 WARRANTY: The tank manufacturer shall warrant the tank against any defect in workmanship and materials for a period of one (1) year from the date of substantial completion. In the event any such defect should appear, it should be reported in writing to the Manufacturer during the warranty period.

12.0 DRAWINGS AND SUBMITTALS: The contractor shall furnish the Engineer with five (5) copies of shop drawings for approval including all items necessary for a completed welded steel ground storage tank. The shop drawings shall be signed and sealed by a Professional Engineer registered in the State of Texas.

END OF SECTION

SPECIFICATION WP-225

PAINTING

1.01 SCOPE:

This section covers painting, surface preparation, protection of surfaces, testing and inspection. The Contractor shall furnish all materials, tools, equipment, and labor to paint the facility, including piping, machinery, miscellaneous metals, structures, and buildings, as shown on the drawings and specified herein. All coatings and solvents will be delivered to the job site in original, sealed, and labeled factory containers. All coatings shall be made by a single manufacturer and applied in strict accordance with the manufacturer's requirements and instructions.

2.01 PREVAILING REGULATORY REQUIREMENTS:

A. It is the contractor's sole responsibility to protect the plant, equipment and environment while performing work under these technical specifications. In addition, it the contractor's sole responsibility to provide a safe working environment for all individuals working in accordance with these technical specifications. Therefore, the contractor shall comply with all applicable requirements of the following regulatory agencies;

TCEQ	Texas Commission on Environmental Quality
TACB	Texas Air Control Board
HCHD	Harris County Health Department
EPA	Environmental Protection Agency
OSHA	Occupational Safety & Hazard Association
NSF	National Sanitation Foundation

B. The contractor shall obtain all required permits in compliance with the above listed regulatory agencies in order to complete the surface preparations, application and the handling, removal and disposal of used abrasive, paint containers and any other trash generated during this subject project. In addition, if a permit is not required, then the contractor shall issue a letter to the District's engineer stating that the contractor has researched all regulatory agencies and that no permit(s) is required.

3.01 COLOR SELECTION:

The colors shall be selected from the manufacturer's standard color chart by the Owner.

4.01 MATERIAL HANDLING AND STORAGE: All paint shall be delivered to the job in original unopened containers with labels in tact. Paint shall be stored inside and shall be protected against freezing. No adulterant, unauthorized thinner, or other material not included in the paint formulation shall be added to the paint for any purpose.

5.01 SHOP PAINTING: Valves and piping shall have shop paint removed by sandblasting (SSPC SP-10).

6.01 MIXING AND THINNING: Paint shall be thoroughly mixed when withdrawn from the container. Paint containers shall be kept tightly closed except while paint is being withdrawn.

Unless otherwise authorized, all paint shall be factory mixed to proper consistency and viscosity for hot weather application without thinning. Thinning will be permitted only as necessary to obtain recommended coverage at lower application temperatures. In no case shall the wet film thickness of applied paint be reduced by addition of paint thinner, or otherwise, below that represented by the recommended coverage rate.

7.01 ABRASIVE BLAST MATERIALS

A. Mineral and slag abrasive materials are to conform to the requirements of the Society for Protective Coating's Abrasive Specification No. 1, SSPC-AB1. Abrasives are to be Class A, less than 1% crystalline silica. The conductivity of the abrasive (indicative of water soluble contaminants) is not to exceed 500 microsiemen (micromhos) when tested in accordance with ASTM-D4940. Prior to use, provide the Engineer qualifications and conformance testing performed and documented in accordance with Section 5 of SSPC-AB1. Abrasive materials expressly prohibited from use include sand and copper slag.

7.01 SURFACE PREPARATION: All surfaces to be painted shall be dry and clean and shall meet or exceed the recommendations of the paint manufacturer for surface preparation. Cleaning and painting operations shall be performed in a manner which will prevent dust or other contaminants from getting on freshly painted surfaces.

Oil and grease shall be completely removed by use of solvents or detergents.

Surfaces shall be free of cracks, pits, projections, or other imperfections which would prevent the formation of a smooth, unbroken paint film. Surface anchor pattern shall be 2.0 to 3.5 mil.

When applying touch-up paint, or repairing previously painted surfaces, the surfaces to be painted shall be cleaned and sanded or wire brushed in such a manner that the edges of adjacent paint are feathered or otherwise smoothed so that they will not be noticeable when painted. All paint made brittle or otherwise damaged by heat of welding shall be completely removed.

The surface preparation shall be in accordance with Steel Structures Painting Council Specifications as follows:

SURFACE	SURFACE PREPARATION
Tank Components, Piping	

Valves, Fittings & Misc. Steel	SSPC-SP-10
Galvanized & Non-Ferrous Metals	SSPC-SP-1 & 3
Concrete & Masonry	Remove efflorescence, chalk, dust dirt, grease, oil, tar, excessive mortar, and iron by brush-off blast, hand tool cleaning, and acid wash

Prepared surfaces shall be approved by the Engineer before applying the paint.

8.01 ENVIRONMENTAL CONDITIONS:

A. Blasting or coating applications shall NOT take place in rain, snow, mist or fog. Blasting or coating operations shall not take place on a damp or wet surface. This includes the inside of the equipment as well.

B. The metal temperature shall be above 50 degree F. prior to coating application. If it is expected to fall below 40 degrees F. within six hours after the anticipated application time, the coating shall not be applied.

C. The relative humidity shall be below 85% as verified by the use of a sling psychrometer in conjunction with the US Department of Commerce Weather Bureau Psychrometric Tables. The ambient temperature shall be 5 degrees F. above the dew point listed in these tables.

D. The maximum steel temperature that coating can be applied too shall be 125 degrees F.

F. It is the responsibility of the contractor to confirm the above prior to commencing operations. If found unacceptable by the Site Representative, any work performed shall be rejected. If the conditions are border line, then the contractor shall discuss the conditions with the Site Representative prior to commencing operations.

9.01 CONTAINMENT SYSTEM

A. Provide a containment system which allows for the containment of the environmentally sensitive waste, dust and paint over spray that will be generated during the blasting and painting operations.

B. When a tank is to be rehabilitated and the coatings to be removed contain lead, containment to conform at a minimum to the requirements of TCEQ Texas Air Control Board Regulation I, 31 TAC Chapter 111 Sections 131 through 139.

C. When chemical stripping agents are used, provide for containment of debris, aerosols, strippings and other emissions or releases. In addition, manage contained waste in accordance with Section 01576 "Waste Material Handling and Disposal" and Contractor waste handling procedure.

D. Determined by the Engineer, the containment system requirements, if any, for wet abrasive blast or vacuum abrasive blast, and roller applied or brush-on coatings. Use impervious ground coverage at all times.

E. Construct containment system with wind screens of a minimal shade factor as required below, with no emission from edges, rips, or tears. The containment system must be designed for the purpose of containing and controlling emissions, debris and protecting the air, ground and soil from contaminants resulting from lead paint removal, surface preparation and painting operations.

1. For rehabilitating an existing tank, employ a Containment System meeting the requirements of an SSPC Class 2 containment, per SSPC Guide 6 (CON), when lead containing paint is to be removed by abrasive blast cleaning methods.

2. The containment materials must provide for performance which will comply with the following:

   a. Protection of the environment, including air, water and soil, from abrasive blast media, process water, dust particles and paint debris.

   b. Air movement within containment.

   c. Secure edges and seams.

   d. Permeable to natural lighting, unless alternate lighting is to be provided.

   e. Tarp overlap to provide for maximum containment of spent debris.

4. Maintain the containment system free of defects through the course of the project. In the event that emissions or releases occur which exceed the requirements established, stop work until all defects are repaired.

5. Prior to installation, the containment system design must be submitted and reviewed by the Engineer. In addition, for work on elevated water storage tanks, design the containment enclosure to be raised and lowered within 15 minutes to prevent damage to the enclosure, the tank, personnel, and excessive loading to the tank and tank appurtenances in the event of high winds and foul weather.

6. Place membranes that are impervious to the abrasive blast media, paint debris dusts, and process water on the ground around the tank to prevent contamination of the ground storm waters and surface waters due to run-off. Use chemically resistant membranes when chemical stripping is employed. Contain the debris within 30 feet of the base of the tank.

9.01 APPLICATION:

A. Paint shall be applied in a neat manner, with finished surfaces free of runs, sags, ridges, laps, and brush marks. All weld seams and corners shall be stripe coated. Each paint coat shall be dry to the extent recommended by the manufacturer before the next coat is applied. Each coat shall be applied in a manner that will produce an even film of uniform and proper thickness. In no case shall paint be applied at a rate of coverage per gallon which is greater than the maximum rate recommended by the manufacturer.

Paint used in successive field coats shall be produced by the same manufacturer. Paint used in the second field coat over previously painted surfaces shall cause no wrinkling, lifting, or other damage to underlying paint.

B. Interior – Prior to application of primer and prior to application of intermediate coat, brush stripe coat all welds, rivets, corners, edges, crevices and uniformly pitted surfaces. Brush stripe coat rough pits, depressions, and crevices to work in coatings. Do not thin stripe coats in excess of that recommended by the manufacturer.

For rehabilitation of an existing tank:

1. Fill weld “deep pits” and grind flush at the direction of the Engineer. Payment to be at the unit price bid for "Extra 6-inch Diameter Floor Patches".

2. Moderately and badly pitted surfaces may exceed specified limits on the anchor profile. The primer coat dry film thickness must be sufficient to adequately cover the anchor profile.

C. Exterior - All welds, rivets, corners, edges and irregular surfaces are to be stripe coated as part of the first coat application. Brush stripe coat pits, depressions and crevices to work in coating. Apply coating by brush or roller, using manufacturers’ recommended thinner (if applicable) for the application method selected. NO SPRAY PAINTING ON EXTERIOR SURFACES AT TANK SITES WILL BE PERMITTED WITHOUT THE USE OF CONTAINMENT SCREENS AND APPROVAL OF ENGINEER.

10.01 REPAIRING DAMAGED PAINT:

Painted surfaces which have become damaged prior to acceptance by the Owner shall be repainted with the same or equivalent paint and methods used in the original application. Repair damaged areas in galvanized coating as follows:

1. Interior surfaces require a NSF approved cold galvanizing component.

2. Mechanical exterior damage to be prepared by hand tool (SP-2) or power tool (SP-3) spot cleaning and to be spot coated with an organic zinc coating approved by the Engineer.

3. Prepare damaged areas exhibiting red rust to bare metal (SP-11) and coat with

an inorganic zinc coating approved by the Engineer.

11.01 PROTECTION OF SURFACES:

Throughout the work the Contractor shall use drop cloths, masking tapes, and other suitable measures to protect all surfaces from accidental spraying, spattering, or spilling of paint. The Contractor shall be responsible for and shall correct and repair damage resulting from his operations or the operations of those responsible to him.

12.01 REMOVAL OF IMPROPER PAINT OR PAINT IMPROPERLY APPLIED:

All applied paint that does not conform to the requirements herein specified, or paint that has been applied on surfaces that have not been cleaned sufficiently or properly shall be thoroughly removed and the surfaces cleaned and repainted to the satisfaction of the Engineer, at the expense of the Contractor.

When the final field coat does not have a uniform color and appearance throughout the structure, it shall be corrected by the use of additional coats as may be necessary.

13.01 COATING SYSTEMS SCHEDULE: Acceptable manufacturers are Sherwin Williams, Tnemec, and Carboline.

A. TANKS

1. Interior:

1st Coat 4.0-6.0 Mils (DFT)	Sherwin Williams Macropoxy 646
2nd Coat 4.0-6.0 Mils (DFT)	Sherwin Williams Macropoxy 646

2. Exterior:

1st Coat 4.0-6.0 Mils (DFT)	Sherwin Williams Macropoxy 646
2nd Coat 4.0-6.0 Mils (DFT)	Sherwin Williams Macropoxy 646
3nd Coat 2.0-3.0 Mils (DFT)	Sherwin Williams Hi-Solids Urethane

B. PIPING, VALVES, MACHINERY & MISCELLANEOUS STEEL

1st Coat 1.5-3.0 Mils (DFT)	Sherwin Williams Macropoxy 646
2nd Coat 1.5-3.0 Mils (DFT)	Sherwin Williams Macropoxy 646

3rd Coat Sherwin Williams Hi-Solids Urethane
1.0-2.0 Mils (DFT)

C. CONCRETE AND MASONRY (Interior & Exterior)

1st Coat Sherwin Williams Heavy Duty Block Filler
75-100 Sq.Ft./Gal.

2nd Coat Sherwin Williams High Perform Epoxy
75-100 Sq.Ft./Gal.

3rd Coat Sherwin Williams High Perform Epoxy
125-150 Sq.Ft./Gal.

Maximum dry mill thickness shall not exceed 9 mils for first coat and second coat each.

D. HOT DIPPED GALVANIZED SURFACES

1. If specified, hot dip galvanize in accordance with ASTM A 123, ASTM A 385 and/or ASTM A 153.

2. The completed galvanized sections to have a minimum of 2 ounces per square foot. Two ounces of galvanizing per square foot equals approximately 3.4 mils.

3. Estimate weight of galvanizing by use of magnetic dry film thickness gage in accordance with ASTM E 376-89.

4. Galvanizing (zinc) in contact with potable water must be NSF classified for contact with potable water.

E. Non-Skid Walk-Way

1. GST – Provide three-foot wide safety/skid resistant roof walkway. Coating to be compatible with specified external prime coat coating system and applied to a properly cleaned surface. Spread crushed walnut shells or aluminum oxide on intermediate coat while still tacky to achieve a coarse textured finish. After this coat has cured, sweep all loose shells or grit from surface and apply finish coat. Finish coat paint color to be a contrasting shade to the roof color. For galvanized tanks, do not blast but clean according to SP-1. Apply one coat of wash primer, then apply skid resistant material.

2. EST – Provide safety/skid resistant walkway, as above, inside the handrail area on the tank roof.

14.01 EPOXY CAULKING

A. Use flexible, NSF classified epoxy caulking for use in contact with potable water and compatible with the epoxy lining system used in the tank.

B. Caulk to be 100% solids, two component, polyamine or polyamide cured.

C. The coating manufacturer and caulk material manufacturer to confirm, in writing, that the internal epoxy coating system is compatible with the 100% solids epoxy caulk material.

D. Include in the written confirmation of material compatibility, any conditions for or surface preparation requirements of the epoxy caulk material.

E. Acceptable product is "Aquatapoxy A7", manufactured by Raven Lining Systems, or equal.

14.01 INSPECTION & TESTING:

A. The contractor shall perform all required inspections prior to the site inspector performing inspection activities, to ensure that the area to be inspected is acceptable to project requirements. It is not the responsibility of the inspector to perform inspection activities for the contractor. Any area found unacceptable to the inspector shall be repaired at the expense of the contractor including the cost of the inspector. All testing shall be done in accordance with Section 8 of the latest edition of AWWA Standard Specifications D-102 or the latest revisions thereof.

B. The contractor is required to have on site at all times the required inspection and testing equipment. This shall include but is not limited to; wet film thickness gauge, dry film thickness gauge, micrometer and Testex tape, sling psychrometer, temperature gauge, US Department of Commerce Weather Bureau Psychrometer Tables, low voltage holiday detection equipment and any other equipment deemed necessary. The inspection equipment shall be calibrated prior to any inspection.

C. The contractor and the inspector shall coordinate in advance of any work to be performed the timing of completion of the work in order for the project to continue in a timely manner. The following inspections, but not limited to, shall be performed by the contractor and the inspector;

1. The inspector shall take and record the environmental conditions with the contractor when he is on site,

2. Inspection and approval of surface preparations prior to any coating,

3. Inspection and approval of each coat prior to application of the next coat. Areas found unacceptable shall be repaired,

4. Wet and dry film thickness measurements shall be performed at applicable times,

5. Visual inspection of the entire surface to be coated,

6. Holiday inspection after the coating has cured a minimum of seven (7) days at 75 degrees F. The coating manufacturer shall be consulted on the numbers of days required to wait prior to holiday inspection. Holiday inspection will be performed on immersed and non immersed surfaces inside the tank, special consideration around lap joint will be discussed at the pre-job meeting.

D. To facilitate adequate examination of all surfaces, including the roof and shell surfaces, above the overflow pipe, center support column and above the rafters, the contractor shall supply scaffolding or rigging and adequate illumination required to perform all inspection activities. Personnel shall be made available to move the scaffolding or rigging.

E. All inspection activities shall be performed in accordance with the requirements of SSPC and NACE.

15.01 FIRST ANNIVERSARY INSPECTION:

The Contractor shall perform first anniversary inspection in the presence of Owner's representative as per Section 9 of the latest edition of AWWA Standard Specification D-102.

16.01 SUBMITTALS

The contractor shall submit for approval by the engineer the following information;

1. Type of grit and how it will be stored,

2. Name of paint manufacturer, type of paint, trade name and number identifying each paint material, technical data sheets, Material Safety Data Sheets, color chart to allow final color to be selected by owner,

3. Proof of compliance with requirements for potable water contact,

4. Proof of compliance with the performance data listed in these specifications,

5. Proof of a lead free system

17.01 TOUCH-UP PAINT:

The Contractor shall provide 5 gallons of each paint used in unopened containers.

18.01 GUARANTEE

All work performed under these specifications shall be free of defects in either material or workmanship for a period of one (1) year after final acceptance.

19.01 CLEANING AND DISINFECTION:

After construction and painting has been completed, the tank shall be cleaned and disinfected before being placed in service. The cleaning and disinfection of the tank shall be in accordance with City Standard Specifications.

20.01 MEASUREMENT AND PAYMENT:

Measurement and payment for painting will be included in the applicable equipment installation item and shall be considered full compensation for providing all labor, equipment, materials, etc. necessary for a complete coating system.

END OF SECTION

SPECIFICATION WP-240

CHLORINATION SYSTEM

1.01 GENERAL:

The Contractor shall furnish all transportation, labor, materials, equipment and supervision required to furnish and install the proposed new chlorination equipment, piping, and appurtenances complete as shown on the plans and specified herein. Acceptable manufacturer is Wallace & Tiernan or Approved Equal.

2.01 SCOPE:

The Contractor's work to be performed under this section shall include furnishing and installing the proposed chlorination system consisting of: two (2) remote vacuum type chlorinators, two (2) vacuum regulator check units with automatic and manual switchover and filter trap assemblies, one (1) booster pump, chlorine cylinder scales, four (4) stainless steel (316) safety chains for auxiliary cylinders, four (4) flexible polyethylene gas cylinder connectors, Schedule 80 PVC chlorine solution and water supply pipe, valves and fittings, flexible polyethylene gas vent tubing with stainless steel screen outlet, one (1) chlorine gas leak detector with local and remote alarm indicator lights, automatic vent fan control circuits and maintenance kit, self-contained breathing apparatus with storage cabinet, and miscellaneous appurtenances as shown on the plans and as specified herein.

A. Chlorinators: The Contractor shall furnish and install two (2) remote vacuum chlorinators in the proposed chlorine room as shown on the plans and as specified herein. The chlorinators shall be Wallace & Tiernan Series S10K with 50 lbs/day rotometers and injector throat assemblies. The system shall be designed for manual feed rate control and for automatic start/stop operation. The chlorinators shall be capable of injecting up to 5 mg/l with a 10:1 turn down ratio. The Contractor shall provide one (1) spare 100 lbs/day rotometer and injector throat assembly and complete spare parts kits for each chlorinator. The Contractor shall furnish and install chlorine gas polyethylene vent tubing with stainless steel screened outlet from the pressure relief valves to the building exterior.

B. Automatic Switchover Vacuum Regulator Check Unit: The Contractor shall furnish and install two (2) container mounted automatic switchover vacuum regulator check units (The Regulators) complete with trap and filter assemblies. The automatic switchover shall automatically change the chlorine supply from the operating bank of cylinders to the standby bank of cylinders when the operating supply becomes exhausted. The Regulators shall be Wallace & Tiernan Model No. 200C with filter trap assemblies Wallace & Tiernan No. G1123.

C. Booster Pump: The Contractor shall furnish and install one booster pump including bypass piping. Booster pump shall be manufactured by Sta-rite or an approved equal product. The pump shall be rated for ½ horsepower.

D. Chlorine Gas Piping: The contractor shall furnish and install chlorine gas manifolds, chlorine gas piping, chlorine cylinder flexible connectors, piping supports and hangers and appurtenances as shown on the plans and as specified herein. The chlorine gas manifold shall be fabricated of schedule 80 PVC threaded pipe and screwed fittings. The Contractor shall furnish and install chlorine header valves at each manifold inlet and captive yoke auxiliary cylinder valves as shown on the plans and specified herein. The Contractor shall furnish and install two (2) flexible connection lines (3/8" x 1/2" polyethylene tubing). The Contractor shall furnish and install schedule 80 PVC chlorine gas supply piping from the manifold to the chlorinators complete as shown on the plans and specified herein. The chlorine gas valves shall be schedule 80 PVC True Union threaded ball valves and the fittings shall be schedule 80 PVC threaded. The Contractor shall furnish and install pipe supports and hangers as required to properly (substantially) support all piping provided in this section. The pipe supports shall be Grinnell Fig. 138R with base plates Fig. 128R, machine threaded hanger rods and Phillips Concrete Fasteners No. FH-338.

E. Chlorine Solution and Water Supply Piping: The Contractor shall furnish and install Schedule 80 threaded PVC chlorine solution and water supply pipe, valves, and fittings as shown on the plans and specified herein. The valves shall be Hayward Safe Block True Union PVC threaded ball check valves. The solenoid control valve shall be Plast-O-Matic Model No. EASMD6EP22W28 PVC threaded solenoid valve. The wye strainer shall be Hayward PVC threaded with Type 316 stainless steel 40 mesh screen. The booster pump pressure regulator valve shall be Plast-O-Matic Model No. PR0150V PVC threaded pressure regulator valve. The booster pump pressure relief valve shall be Plast-O-Matic Model No. RVT 150V-PV PVC threaded pressure relief valve. The water supply pressure gage shall be Ashcroft Model No. 35-1009-SWL-02L with a range of 0-160 psi.

F. Chlorine Cylinder Scale: The chlorine cylinder scales are to be Wallace & Tiernan Series 50-345. Operating and standby cylinders shall have separate scales. The Contractor shall take care to protect the scale until installation.

G. Chlorine Gas Leak Detector: The Contractor shall furnish and install one (1) chlorine gas leak detector complete with PVC conduit, wire, alarm light, auxiliary alarm contacts and vent fan auxiliary contacts as shown on the plans and specified herein. The detector shall be Wallace & Tiernan Series 50-135 Chlorine Gas Detector. The detector shall be wall-mounted in the chlorinator room and the electrode assembly shall be remote wall-mounted in the chlorine storage room in accordance with the manufacturer's recommendations. The Contractor shall furnish one (1) lot of spare parts to include electrolyte, fuses and lamps. The proposed supply fans shall be energized by a warning contact and the proposed alarm light shall be energized by an alarm contact.

H. Self-Contained Breathing Apparatus: Provide a full-face self-contained breathing apparatus or supplied air respirator that meets Occupational Safety and Health Administration (OSHA) standards for construction and operation, and a small bottle of fresh ammonia solution (or approved equal) for testing for chlorine leakage.

Equipment shall be readily accessible outside the chlorinator room and immediately available to the operator in the event of an emergency.

3.01 MATERIALS:

All materials used in the plant shall be in accordance with the standards of the American Society for Testing and Materials, American Water Works Association, Texas Commission on Environmental Quality, and the American National Standard Institute as they may apply to the materials used in the construction of this facility. In all cases, the material of construction and the equipment to be installed shall be new and undamaged in shipment or installation.

4.01 WORKMANSHIP:

In all phases of the work only competent, certified, skilled mechanics shall be employed and the work shall be in accordance with the Standard and Specifications as set out herein.

5.01 REFERENCE STANDARDS:

All work and materials under this section shall conform to the requirements of the Texas State Department of Health, American Society for Testing and Materials, National Electrical Code, National Fire Protection Association, National Electrical Manufacturers Association, Underwriter's Laboratories, American National Standards Institute, Occupational Safety and Health Agency, The Chlorine Institute, Inc. and all local ordinances.

6.01 DRAWINGS:

A. The Contractor shall review all pertinent drawings and adjust his work to the conditions shown thereon. Discrepancies between drawings, specifications, and actual field conditions shall be brought to the prompt attention of the Engineer.

B. The drawings indicate the approximate locations of existing and proposed power outlets, feeders, branch circuits, panel boards, etc. The exact location of these items shall be determined by measurement in the field form building lines. Such locations will, at all times, be subject to the approval of the Engineer.

The Engineer reserves the right to make any reasonable change in the outlet locations indicated, without any additional cost to the Owner.

7.01 MANUFACTURER:

All chlorination equipment shall be furnished by a single manufacturer. The manufacturer's representative shall inspect the equipment after the installation is complete, make all necessary adjustments to the equipment, and provide 8 hours of continuing instruction to the operator in proper operation and maintenance. The chlorination equipment shall be manufactured by Wallace & Tiernan.

8.01 SUBMITTALS:

The Contractor shall submit, (5) five sets of drawings for review by the Engineer. The information shall include performance data, piping schematics, and detailed installation instructions and drawings.

9.01 SUBSTITUTION:

Bidders are cautioned to obtain approval of other than the Specified System. The Contractor shall submit written modification outlining in detail the substitutions proposed to the Engineer seven work days prior to bid. The contractor shall state advantages, including price allowance and operational advantages for substitutions. An addendum will be issued if acceptable. If use of substitution requires changes or modifications in plans, the Contractor will reimburse the Engineer for cost of such changes.

10.01 UNIT RESPONSIBILITY:

Substitutions accepted by the Engineer shall not relieve the Contractor of the responsibility of furnishing an operational system and if a substitute system fails to perform as required, and is judged faulty, solely at the discretion of the Engineer, the Contractor will be required to remove the substitute system and to install the originally specified system at no additional cost to the Owner.

11.01 OPERATION AND MAINTENANCE INSTRUCTIONS:

The Contractor shall furnish four (4) copies of instruction books, diagrams (including shop drawings), and parts lists with manufacturer's identifying symbols covering all items of equipment furnished. Each of the appropriate publications and drawings shall be placed in binders with each item properly indexed and delivered to the Engineer before final acceptance of work.

12.01 TESTING AND START-UP:

The chlorination system equipment shall be tested prior to being placed in operation. The Contractor shall provide the services of a competent engineer or technician for a minimum of 8 hours for initial start-up and checking out of the equipment installation and its operation. In addition, the manufacturer's representative shall visit the installation at least once during each three month period for a period of one (1) year after start-up to check on and report to the Owner the condition of the equipment and make any adjustments necessary at no extra cost to the Owner.

13.01 GUARANTEE:

All materials, equipment, and appurtenances shall be guaranteed against defects in material and workmanship for a period one (1) year from the date of acceptance by the Owner.

14.01 MEASUREMENT AND PAYMENT:

The various items and work described herein shall not be measured. Payment for items and work described herein shall be made under the Lump Sum Price Bid, for "CHLORINATION SYSTEM", and shall include all labor, supervision, equipment, materials, and incidental items necessary to complete the work as shown on the plans and described in these specifications.

END OF SECTION

SPECIFICATION WP-275

CLEANING AND DISINFECTION

1.01 GENERAL REQUIREMENTS:

This work includes furnishing equipment, materials and labor necessary to disinfect and clean the proposed facilities constructed under this contract.

All portions of the project intended to hold or handle potable water shall be disinfected.

2.01 CONSTRUCTION PRECAUTIONS:

During construction, take all measures necessary to keep and maintain the work as clean as possible. Keep interior of all piping free of foreign matter, rodents and dirt at all times. When not being worked, plug or cap all incomplete piping.

3.01 CLEANING PROCEDURES: Clean the interior of all tanks by scrubbing with rags or approved brushes, followed by hosing down with approved water. The piping system shall not be flushed prior to disinfection.

4.01 DISINFECTION:

A. Materials: The material used for disinfection shall be a chlorine gas-water mixture, calcium hypochlorite in water or chlorinated lime.

B. Methods: Comply with applicable sections of AWWA C601-81.

C. Piping Systems: Proceed as follows or as otherwise approved by the Engineer.

1. Complete hydrostatic tests prior to disinfection.

2. Fill the system with water having a minimum of 100 mg/1 of chlorine and retain it for 24 hours. The minimum free chlorine residual shall not be less than 50 mg/1 after 24 hours.

3. Flush the treated water from the piping system until replacement water has chlorine content of no more than 0.01 mg/L in excess of the chlorine content of the supply water.

5.01 TESTING AND DISPOSAL OF CHLORINATED WATER:

A. After completing the disinfection procedures, water from all units shall be sampled and samples submitted for bacteriological analysis. Any unit whose sample shows presence of objectionable coliform organism shall be disinfected again.

B. Chlorinated water shall be disposed of properly. The system and tank shall not be placed in operation until the disinfection has been approved by the Engineer.

6.01 MEASUREMENT AND PAYMENT: The work performed under this specification will not be measured. No extra payment will be made for "Cleaning and Disinfection", the cost to be included in the bid price for the items requiring sterilization.

END OF SECTION

SECTION 520

WATER PLANT PIPING

1.0 SCOPE

This section includes furnishing and installing steel and ductile iron pipe and fittings for the construction of water lines within the water plant fence.

2.0 PRODUCTS

Unless otherwise noted on the drawings all water piping within the plant boundaries shall be ductile iron pipe.

a. **Ductile Iron Pipe**

Ductile iron pipe and fittings shall be manufactured in accordance with AWWA C110. Pipe thickness shall be Class 53 for above ground service and Class 51 for buried service. Flanged joints shall be used for the suction and discharge header, all above ground piping and also for the first horizontal joint after a piping section has gone below grade.

(1) Interior Coating - Coat the inside of the pipe with cement mortar in accordance with the latest revision of AWWA C-104.

(2) Exterior Coating - Coat the outside of the pipe with coal tar enamel or asphalt base bituminous material. Do not coat exterior of pipe to be installed above ground. All underground flanged joints to be coated and poly-wrapped.

b. Steel Pipe

Steel pipe and fittings shall be used where indicated on the drawings and in accordance with AWWA C200, C206, and C207. The minimum pipe wall thickness shall be:

(1) Less than 5 inches: schedule 40
(2) 6 to 10 inches: 3/16 inch
(3) 12 to 14 inches: 7/32 inch
(4) 16 to 42 inches: 1/4 inch

Coatings shall consist of the following:

(1) Interior Coating - Coat the inside of the pipe with polyamide epoxy that is NSF 61 certified.

(2) Exterior Coating - Coat the above ground steel pipe as specified in WP-225. Below ground steel pipe shall be coated with coal tar and wrapped with polyethylene encasement, or hot applied coal tar tape coating, or cold applied tape coating system.

c. Valves

(1) Gate valves shall be cast iron or ductile iron body, double disk or resilient

seat and O-ring seal. Gate valves must conform to the latest revision of AWWA C-500 to C-509. Furnish a non-rising valve stem, which turns counterclockwise to open, and a valve box for underground installation.

(2) Butterfly valves shall conform to the latest revision of AWWA C-504. Furnish valve operators, which turn counterclockwise to open.

(3) Check valves for booster pumps shall be slanting disc check valves APCO series 800 or equal. Check valves for well manifolds shall be APCO series 600 globe style silent check valves.

(4) Air and Vacuum Release Valve Assembly for well manifold shall be 3 inch for wells less than 1,500 gpm and 4 inch for wells over 1,500 gpm. The surge check unit shall be APCO No. 704, the air and vacuum valve shall be APCO No. 152 and the air release valve shall be APCO No. 200A.

3.0 HANDLING

Pipe, fittings, and accessories shall be handled in a manner that will insure their installation in sound, undamaged condition. Equipment, tools and methods used in unloading, reloading, hauling, and laying pipe and fittings shall be such that they are not damaged. Hooks inserted in ends of pipe shall have broad, well padded contact surfaces. All pipe coating which has been damaged shall be repaired by the contractor before installing the pipe.

4.0 CUTTING PIPE

Cutting pipe shall be done in a neat manner, without damage to the pipe or to the cement lining therein. Pipe cuts shall be smooth straight, and at right angles to the pipe axis. All cutting of pipe shall be done with mechanical pipe cutters of an approved type.

5.0 CLEANING

The interior of all pipe and fittings shall be thoroughly cleaned of all foreign matter before being installed and shall be kept clean until the work has been accepted. Every precaution shall be taken to prevent foreign material from entering the pipe while it is being installed. No debris, tools, clothing, or other material shall be placed in the pipe.

6.0 INSPECTION

Before installation, each pipe and fitting shall be inspected for defects and rung with a light hammer to detect cracks. All defective, damaged, or unsound pipe and fittings shall be rejected and removed from the site of the work.

7.0 LAYING PIPE

Under no circumstances shall pipe, to be placed below grade, be laid in water and no pipe shall be laid under unsuitable weather or trench conditions. Pipe for the water distribution line shall be laid with the center line at a minimum depth of 4 feet below

grade.

8.0 FLANGED JOINTS

When bolting flanged joints, care shall be taken to insure that there is no restraint on the opposite end of the pipe or fitting which would prevent uniform gasket compression or which would cause unnecessary stress in the flanges. One flange shall be free to move in any direction while the flange bolts are being tightened. Bolts shall be tightened gradually and at a uniform rate, in such a manner that gasket compression is uniform over the entire area of the gasket.

a. Special care shall be taken when attaching suction and discharge piping to pumping equipment to insure that no stresses are transmitted to or imposed on the pump suction and discharge flanges by the connected piping. All such piping shall be installed and supported so that accurate matching on bolt holes and uniform contact over the entire are of abutting pump and connecting piping flanges are obtained before installation of any bolts in those flanges. In addition, the pump connection shall be free to move parallel to its longitudinal center line while the bolts in the pump connection flanges are tightened.

b. To provide maximum flexibility and ease of alignment correction by taking advantage of the stack between flange bolts and bolt holes for slight angular rotation of connecting flanges, the pump connecting piping shall be assembled, with gaskets in place, with only a portion of the flange bolts (not less than 4 per joint) installed. After final alignment and before final bolting, the pump connections shall be tested for applied piping stresses by loosening the flange bolts which, if the piping is properly installed, should result in no movement of the piping relative to the pump or opening of the pump connection joints.

c. All underground pipe joints shall be push-on Bell & Spigot, Bell-Tile or non-threading or bolted joint, no flanged or M.J. joints used for underground piping.

9.0 ANCHORAGE OF FITTINGS

All tees, elbows, and plugs below grade shall be anchored by concrete thrust blocks as per details shown on the plans. Blocks shall be so placed that the joints will be accessible for inspection and repair. Concrete shall be 3000 psi (Class A). Supports for above grade piping shall be provided as shown on the drawings.

10.0 LEAKAGE

It is the intent of this specification that:

a. All joints shall be watertight and free from visible leaks.

b. Each leak which may be discovered, at any time prior to the expiration of one year after the date of final acceptance of the work by the Owner, shall be repaired by

and at the expense of the Contractor.

11.0 DISINFECTION & TESTING

All pipe, fittings, valves, and equipment shall be disinfected and pressure tested in accordance with Specification No. 275.

END OF SECTION

APPROVED PRODUCTS LIST

APPROVED PRODUCTS LIST

APPROVED WATER AND SEWER PRODUCTS LIST

All Products must conform to ANSI/NSF standards 60 or 61, if available.

1. Fire Hydrants (Flushing Valves, AWWA C 502)
    A. Mueller – Model: Super Centurion 250
    B. American Darling – Model: B84B
    C. Storz Hydrant Nozzle

2. Gate Valves (3/4 inch thru 2 inch, AWWA Approved, Bronze)
    A. Hammond
    B. Watts
    C. Red and White
    D. Matco Norca
    E. Eagle
    F. C and F

3. Gate Valves (3 inch and larger, AWWA C 509, Resilient Wedge Type, Open Left)
    A. Mueller
    B. Waterous
    C. American Darling
    D. Kennedy
    E. M & H
    F. US Valve
    G. Clow

4. PVC Pipe (AWWA C 900, C 905, C 909)
    A. J-M Manufacturing
    B. Certain Teed Corp.
    C. Diamond Plastics Corp.
    D. Carlon Company

5. Mechanical Joint Restraints
    A. Smith Blair Cam Lock
    B. EBAA Iron Inc.
    C. Megalug

6. Ductile Iron Fittings For C 900, C 905 Pipe (AWWA C 110, AWWA C 153)
    A. All manufacturers compliant with AWWA and/or ASTM standards.

7. Steel Pipe (AWWA C 200)
    A. All manufacturers compliant with AWWA and/or ASTM standards.

8. Steel Pipe Coatings, Exterior (AWWA C 203)
    A. All manufacturers compliant with AWWA and/or ASTM standards.

9. Steel Pipe Coatings, Interior (AWWA C 210, D 102, TNRCC NSF 61)
    A. All manufacturers compliant with AWWA and/or ASTM standards.

10. Curb Stop – Bronze, Ball Valve, 360° Rotation, Locking Wing

    A. Ford
    B. Mueller – Model: Mark II Oriseal

11. Corporation Stop – Bronze
    A. Ford – Model: F100 1” CC Tapered Thread
    B. Mueller – Model: H-15008 or H-15013 1” CC Tapered Thread

12. Service Saddle – Single or Dual Strap, Stainless Steel, Bronze
    A. Ford S-90 for PVC 1” CC Tapered Thread
    B. Ford Single or Dual Strap for AC Pipe 1” CC Tapered Thread

13. U Branch
    A. Mueller ¾” Full Port Ball Valves

14. Water Meter
    A. Neptune Trident or T10(Schlumberger)

15. Service Tubing (3/4 inch thru 2 inch Polyethylene SDR 9, AWWA C-901)
    A. NuMex
    B. Envot
    C. Vrisco Pipe

16. Polyethylene Encasement Tubing for Ductile Iron Systems (AWWA C 105)
    A. All manufacturers compliant with AWWA and/or ASTM standards.

17. Air Release Valve, 2 inch (Bonney Forge 3,000# Threadolet)
    A. APCO – No. 200
    B. GA Industries – Fig. 2- AR
    C. Val-matic, 2 inch

18. Meter Boxes
    A. Concrete
        a. Brooks Products
        b. Southern Precast

19. SCADA
    A. Zetron – RTU Model 1700 MTU Compatible

20. Coatings (Manholes & Lift Stations) (80 mil required for new construction; 125 mil required for rehabilitation jobs)
    A. Strong Seal MS – 2
    B. Structural Rehab Products, L.P.
        a. SRP TC
        b. SRP ML-1
    C. Thane Coat FE 100
    D. Raven 405
    E. Spectra Shield Liner
    F. Poly-Triplex Liner System

G. alternative to coating: Antimicrobial additive, ConShield® or approved equal, used to render the concrete uninhabitable for bacteria growth. The amount to be used shall be as recommended by the manufacturer of the antibacterial additive. This amount shall be included in the total water content of the concrete mix design. The additive shall be added into the concrete mix water to insure even distribution of the additive throughout the concrete mixture. The antibacterial additive shall have successfully demonstrated prevention of microbiologically induced corrosion in sanitary sewers for ten or more years. The antibacterial agent shall be used by factory certified precast concrete plants, and treated products shall be color marked by having colorant added at the precast plant to manufacturer standards to achieve adequate tint.

21. Tapping Sleeves – All Stainless
    A. JCM 432 or approved equal to be ANSI/NSF Standard 61 Certified

22. Sign Post
    A. Green U-Channel 12 Ft.
    B. Vandal-Proof Mounting Brackets

23. PVC Pipe (Sewer)
    A. SDR 26 ASTMD 3034

24. Lift Station Control Panels
    A. E. G. Controls
    B. Consolidated Electric
    C. Murphymatic
    D. Sta-Con, Inc.
    E. Automatic Control Systems
    F. Mercer Controls Division
    G. Motor Controls, Inc.

25. Lift Station Pumps
    A. Flygt

26. Grinder Pumps
    A. Hydromatic
    B. Myers

APPROVED STORM SEWER PRODUCTS LIST

1. Manhole Covers and Rings (ASTM A 48, AASHTO H-20 Load Rating)
    A. Vulcan Foundry – 32 Inch diameter; Model V-2420
    B. Neenah Foundry – 32 Inch diameter; Model R-1741-F
    C. East Jordan Iron Works – 32 Inch diameter; Model V-1420
    D. Star Pipe Products – 32 Inch diameter

2. Storm Inlet Grates and Frames (ASTM A 48, AASHTO H-20 Load Rating)
    A. Vulcan Foundry
    B. Neenah Foundry
    C. East Jordan Iron Works, Inc.

3. Pipe Materials
    A. RCP, 24 inch and larger at all depths – ASTM 76 with rubber gasketed joints conforming to ASTM 433 (Various Manufacturers)
    B. HDPE, 24 inch and larger at all depths (Outside City of Seabrook Public Right-of-Way Only) – AASHTO CM-294 (Various Manufacturers)

4. Reinforced Concrete Box Culverts (ASTM C 789, C 850, AASHTO M259, M273 – Various Manufacturers)
    A. RCB, 24 inches x 24 inches and larger having minimum 2 feet to maximum 12 feet of cover – ASTM C789/AASHTO M259 joined with “Ramnek” joint sealing compound by K.T. Snyder Co.
    B. RCB, 24 inches x 24 inches and larger having less than 2 feet of cover or greater than 12 feet of cover – ASTM C850/AASHTO M276 joined with “Ramnek” joint sealing compound by K.T. Snyder Co.

5. Manholes and Storm Inlets (Precast Concrete)
    A. More-Tex
    B. Southern Precast
    C. Calvert
    D. Gifford Hill
    E. Brooks Products
    F. Dalworth
    G. Precast Systems, Inc.
    H. Koastal Precast, Inc.

6. Geotextile Fabric Wrap
    A. Trevira S1114

7. Pipe Casing Spacers & End Seals for Bored Crossings
    A. Pipeline Seal and Insulator (PSI)

APPROVED STREET PRODUCTS LIST

1. Raised Pavement Markers (Class A, B, C, & D)
    A. Apex Universal

2. Type Y and Type W Traffic Buttons (Ceramic Only)
    A. Apex Universal

3. Raised Pavement Marker Adhesive
    A. Bundy Raised Pavement Marker Adhesive
    B. TxDOT Approved Epoxy

4. Thermoplastic Pavement Markings (125 mil thick)
    A. Flint Trading Inc. – Premark LKF Roadmarking Material

5. Prefabricated Pavement Markings (125 mil thick)
    A. Flint Trading Inc. – Premark LKF Roadmarking Material

6. Thermoplastic Adhesive
    A. Ashland Chemicals – Pliobond 10

7. Crack and Joint Sealant
    A. Elastometric-Type, Hot pour joint sealant conforming to TxDOT Item 433 and TxDOT Departmental Material Specification D-9-6310

8. Paints (Various Manufacturers)
    A. Only water based conforming to TxDOT specifications are approved for use in the City of Seabrook

9. Road Marker Posts
    A. Carsonite #CRM-375

10. Replaceable Delineator Post w/ Base (Epoxy or 8” Bundy Adhesive)
    A. Repo TM Model

11. Concrete Curing Membranes (Various Manufacturers)
    A. Liquid membrane-forming curing compound conforming to TxDOT Item 526 and TxDOT Departmental Material Specification D-9-8120

12. Chemical Stain for Use on Ramps for Handicapped Access (Cola Color, ADA Texas Accessibility Standards)
    A. Kemiko Concrete Products

13. Traffic Control Signalization, Lighting and Appurtenances
    A. All materials and manufactured products pertaining to traffic control signals, lighting, and associated appurtenances shall conform to current TxDOT specifications and shall be listed in the TxDOT Prequalified Master List of Approved Products at time of installation.

1.0 GENERAL

1.1 DESCRIPTION

a. The work shall include providing materials and equipment required for installation of complete and functioning electrical system as specified and as shown on the drawings. Unless noted in the Bidsheet, no separate payment will be made for work under this section. Include payment in unit price for applicable work as noted on the Bidsheet.

b. This section is an integral part of all Specification Sections related to electrical, control and instrumentation construction under this contract. Conditions of this section are paramont to all other conditions in applicable sections and shall supercede all other conditions and requirements.

c. Electrical Control and Instrumentation Plans & Specifications are representative of the design intent and may not contain minute details normally associated with normally accepted electrical construction, as described in applicable codes or as described in manufacturer's literature. Contractor shall provide all appurtenances normally associated with a particular equipment or device, and as required for a properly operating system.

d. Electrical Contractor is responsible for ensuring that the latest edition of the NEC is complied with, including but not limited to, the cross referencing of cited NEC articles to current NEC articles.

1.2 MAJOR ITEMS OF WORK AS FOLLOWS – for Seabrook Water Plant No. 1 Relocation to Water Plant No. 2 Site

Water Plant No. 1

a. Install New Electrical Service Equipment, with Surge Protection
    a. Existing Pole Mounted Transformers
b. Site Grounding System
c. New Motor Control Center with single phase transformer and panelboard.
d. Relocation of the existing SCADA system from Water Plant No. 2 shall be covered by a Bid Allowance. Reference notes 7 & 8, Sheet E-2.
e. New 120/240V Feeders to Panels and Equipment
f. Underground Duct Banks
g. Motor and Equipment Feeders
h. Electrical Panel and Equipment Identification
i. Exterior Lighting (Well Pump)
j. Relocate existing gen set from Water Plant No. 2 and re-feed the auxiliary loads (battery charger, strip heater, and block heater), and auto-start signal and alarm signals.

Water Plant No. 2

k. Install New Electrical Service Equipment, with Surge Protection
   a. Pad Mounted Transformer
l. Site Grounding System
m. New Motor Control Center with wall-mounted single phase transformer and panelboard.
n. Relocation of the existing SCADA system from Water Plant No. 1, and expansion of the SCADA system for Booster Pump #4, shall be covered by a Bid Allowance. Reference notes 7 & 8, Sheet E-5.
o. New 120/240V Feeders to Panels and Equipment
p. Underground Duct Banks
q. Motor and Equipment Feeders
r. Electrical Panel and Equipment Identification
s. Interior Lighting (Proposed MCC/Pump Room, LAS Room, Chlorine Room & Restroom)
t. Control Room Loads
u. Exterior Lighting (Building and Well Pump)
v. Pressure Tap tubing from proposed SCADA panel to:
   a. Proposed GST (GST Level)
   b. Proposed Booster Pump Discharge Piping (System Pressure)
w. Relocate existing gen set from Water Plant No. 1 and re-feed the auxiliary loads (battery charger, strip heater, and block heater), and auto-start signal and alarm signals.

1.3 PLANT CONTROL SYSTEM

a. The Contractor shall furnish and install a complete operating control system. The control system shall include but shall not be limited to all circuit breakers, motor starter, contactors, indicating lights, selector switches, lightning arrestor, surge capacitor, phase failure relays, elapsed time meters, alarm horn, push button, control transformer, ammeters, volt meters, interlock wiring, control piping, blocks, valves, nameplates, and all other associated items required to provide a workable system. All pump controls to have level and pressure call and reset devices, motor start time delays and, elapse time meters installed.

b. Provide circuit conductors, conduits, circuit breakers, and related devices for furnishing power to all motor heaters, instruments, devices, lights, controls, and other equipment provided by vendors, or others for this project.

c. Control diagrams shown on plans are illustrative in nature and may require additional devices such as time delays, resets and other devices required for a proposed control system. No RACE conditions shall exist in controls operation.

d. All controls shall be fully tested in shop for proper and satisfactory operation, prior to installation at site. Contractor to provide written certification before delivery to site. Any installations without certification notice are done at risk by Contractor, who shall be obligated to

make all necessary corrections in field at no additional cost to owner.

1.4 SUBMITTALS

a. Submit all products covered under this section for Engineer's approval.

b. Where submittals for a particular equipment, device or material item vary from that specified or shown on plan drawings, and where that item is not specifically noted as acceptable and, where installation of submitted item results in improper or undesirable operation of the system, Contractor shall be liable for removal and/or replacement of that item with the item specified or shown on plan drawings at no additional cost to Owner.

1.5 CONTRACTORS RESPONSIBILITIES

a. Electrical Contractor shall coordinate electrical power, telephone, data or special purpose line installation with utility companies. Within 30 days after award of contract, Electrical contractor shall contact utility company and owner and shall request service needed.

It is Electrical Contractors sole responsibility to assure that utility company and Owner are notified and are kept aware of requirements.

b. Contractor shall provide all conduit, conductors and termination equipment as needed for utilities and shall coordinate with utility companies for installation requirements and shall provide installation constructed according to the utility company standards whether or not such is shown in detail or plans.

c. Electrical Contractor shall review all sections of the plans including Civil, Structural, Mechanical, Instrumentation, Process, Architectural, and Electrical and shall note all electrical requirements for devices and equipment shown or implied, and shall provide service accordingly for a complete operating electrical system.

d. Electrical Contractor shall provide all programming set-up, adjustments and testing of devices or equipment included under this contract unless specifically excluded or unless equipment is not provided by Electrical Contractor.

e. General Contractor is specifically responsible for coordination of all electrical systems, devices and equipment provided or installed under this contract and shall assure that all requirements by all trades are met such as to insure a complete and operating electrical, control, process or instrumentation system. Special attention shall be given to coordination of motors supplied and MCC components supplied. This includes verification of compatibility of all interfacing connectors and devices at new, existing, and Owner furnished equipment. Notify Engineer of any discrepancies

before ordering equipment. Failure to do so may result in additional cost to Contractor.

f. Electrical Contractor shall be experienced with all types of electrical systems covered under this contract. No work shall be undertaken where Contractor's firm, project supervisors and project electrical workers have not had recent experience in similar projects in area of project location. Contractor will be required to furnish proof of experience where requested by Owner or Engineer or their Representatives.

g. General Contractors Project Manager or his Assistant shall be familiar with types of electrical construction required by this project in order to determine that all subcontractors work in conformance with the plans and specifications.

h. Contractor shall assure that all systems have been properly installed, adjusted and tested prior to final inspection, unless, Engineer has been duly notified in writing that certain equipments are not ready for final testing and such is acceptable with Engineer.

i. Contractor shall fully inspect all motors and nameplates, controls, conduit, wiring devices and other items before starting work, ordering materials or submitting shop drawings in order to verify existing conditions are as shown on plans and, shall immediately notify Engineer of any discrepancies between plans & specifications and existing conditions. Failure to do so may result in Contractor's responsibility for any required changes in construction. This includes verification of compatibility of all interfacing connectors and devices for new, existing, and Owner furnished equipment. Notify Engineer of any discrepancies before ordering equipment. Failure to do so may result in additional cost to Contractor.

j. At completion of project and before final inspection, Contractor shall provide the Electrical Engineer with full size blue prints, red-lined to reflect the "As-Built" electrical installation. Any variation from plans shall be shown on each applicable plan sheet.

k. When work involves modifications or additions to existing plant, Contractor shall make provisions for continuous electrical service thru normal power or standby generator power. Where standby generator exists but, will be temporarily out of service during construction, Contractor shall provide substitute generator power for duration of outage.

In no event shall plant be without operating power or, without standby generator service where generator exists. Include all transfer switches, fuel tank, fuel, attendance and appurtenances required for a complete power system as needed for interim plant operation.

l. Where work involves additions, modification, demolition or renovations to existing facilities, Contractor shall remove, relocate and extend existing installations to accommodate new

construction.

m. Provide electrical circuits to all equipment as required by manufacturer. Verify location and characteristics of all equipment shown on plans and in specifications and size circuits accordingly. All conductors and conduits to comply with NEC Article 250 and Article 310.

n. Equipment, instruments, controllers, VFD's, conduits and related appurtenances are shown in approximate locations. Contractor shall field select optimum location and where necessary, relocate up to ten (10) feet from location shown on plans to accommodate installation, at no additional cost to Owner.

2.0 PRODUCTS

2.1 MATERIALS

a. All materials provided under all sections of the specifications shall be new and the standard products of manufacturers regularly engaged in the production of such equipment. All materials shall conform to the National Electrical Code and shall be approved and listed by the Underwriters' Laboratories. Materials described by manufacturer's name and catalog number are selected to set a definite standard of design and quality to be required. There is not any intention to discriminate against a product of another manufacturer which is equally durable in construction, similar in design, and will serve the purpose for which it is intended. Within 30 days after award of the contract and before any materials and equipment are placed on order, the Contractor shall submit to the Engineer for approval a complete list including catalog numbers and descriptive matter, of all materials and equipment he proposes to provide.

b. Materials and equipment specifications are general in coverage and may contain reference to construction items that apply in only particular situations and may not apply as a general rule for materials installed on this project.

c. Outdoor equipment shall not have exposed devices or controls, unless specifically called for on plans. The outer door shall cover all such items. No see thru windows are allowed unless specifically approved. All outer doors to have locking hasp. Keyed handles only acceptable where specifically approved. All NEMA 4X enclosure doors to have **quick release** latches.

d. All PLC's, controllers, VFD's, instruments and electronic equipment installed outdoors or in unconditioned spaces shall have means of cooling to allow satisfactory operation in local environment and at conditions required by equipment manufacture specification.

e. All control Panels and Motor Control Centers that are not a standard manufacture, off the shelf project shall be manufactured in accordance with plans and specifications with high quality materials and components and shall bear a U.L. listed label or, be constructed by a U.L. listed shop.

2.2 PLANS AND SPECIFICATIONS

a. Electrical plans and specifications are not intended to discriminate against any particular manufacturer. Specific values shown for a particular manufacturers product may vary slightly for another product. The Electrical Engineer reserves the right to interpret the electrical specifications and to make judgement as to acceptance of a product, regardless of minute details in the specifications or on the plans.

b. Specifications shall be reviewed for applicability of materials under certain conditions and in certain environments and, where not shown otherwise on plan drawings. These application directions shall be adhered to.

c. Where a particular reference on drawing plans does not conform to standard acceptable construction methods for a particular type project, the Contractor shall immediately notify the Engineer and request a clarification before ordering materials or starting construction.

d. Plans are general in nature and may not show minute details of existing conditions or proposed work. Existing conditions may include undocumented buried pipes, conduits and structures that lie in the route, or at location, of equipment or conduit installation required for this project. These uncertainties shall be accounted for in the Contractors Bid. Contractor shall adjust conduit routes, equipment pads and equipment mountings, as required, for a satisfactory installation for the conditions imposed and at no additional cost to the Owner.

e. Electrical site plan drawings shall only be scaled when "Scalable Drawing" appears on the drawing sheets.

3.0 EXECUTION

3.1 WORKMANSHIP

All wiring shall be installed in accordance with current NEC and local codes. Field select routing of conduits to avoid underground piping, conduit or structures that may be shown on plans. Adjust route of electrical conduits and ductbanks below proposed or existing buried piping. Provide minimum 24" clearance vertically and horizontally. This work shall be performed in a satisfactory manner and at no additional cost to Owner.

A fish wire shall be left in all conduits in which the permanent wiring is not installed.

All fixtures, switch, and receptacle locations shall be approved by Engineer.

Refer to other sections of this specification for controls. Under this section of the specifications, the Contractor shall install the control devices and provide control wiring switches, outlet boxes, and

shall make all final connections. Control wiring and interlocks shall conform to wiring diagrams furnished by equipment manufacturers.

The Contractor shall provide services of his Engineer or a factory trained technician to instruct plant operating personnel for a period of at least one (1) full day after completion of the contract work.

3.2 EXCAVATION AND BACKFILL

All underground conduits shall be buried to a minimum depth of 24-inches below finished grade. All trenches shall be uniform width and shall be backfilled and compacted to 95% that of original density. Any damage to underground conduits caused by other Contractors shall be repaired by this Contractor and shall be compensated accordingly by the party or parties responsible for the damage.

3.3 CLEAN UP

The Contractor shall upon completion of the work, remove all materials, empty containers, and any other materials that are not incorporated into the work.

- - o O o - -

1.0 G E N E R A L

1.1 SECTION INCLUDES

a. Specification for conduit, fittings and bodies.

1.2 REFERENCES

a. American National Standards Institute (ANSI).

1. ANSI C80.1: Rigid Steel Conduit - Zinc Coated.

2. ANSI C80.4: Fittings for Rigid Metal Conduit.

b. Federal Specifications.

1. W-C-58C: Conduit Outlet Boxes, Bodies Aluminum and Malleable Iron.

2. W-C-1094: Conduit and Conduit Fittings Plastic, Rigid.

3. WW-C-566C: Flexible Metal Conduit.

4. WW-C-581D: Coatings on Steel Conduit.

c. National Electrical Manufacturers Association (NEMA).

1. NEMA RN1: Polyvinyl-Chloride Externally Coated Galvanized Rigid Steel Conduit and Electrical Metallic Tubing.

2. NEMA TC2: Electrical Plastic Tubing (EPT) and Conduit (EPC-40 and EPC-80).

3. NEMA TC3: PVC Fittings for Use with Rigid PVC Conduit and Tubing.

d. National Fire Protection Association (NFPA), ANSI/NFPA 70 - National Electrical Code (NEC).

e. Underwriters' Laboratories (UL).

1. UL 1: Flexible Metal Electrical Conduit.

2. UL 6: Rigid Metal Electrical Conduit.

3. UL 514B: Fittings for Conduit and Outlet Boxes.

4. UL 651: Schedule 40 and 80 Rigid PVC Conduit.

5. UL 651A: Type EB and A Rigid PVC Conduit and HDPE Conduit.

6. UL 886: Electrical Outlet Boxes and Fittings for Use in Hazardous Locations.

1.3 SUBMITTALS

a. Submit all products covered under this specification for Engineer's approval.

1. Manufacturer's cut sheets, catalog data, with selected products clearly marked.

2. Installation, terminating and splicing procedure.

3. Instruction for handling and storage.

4. Dimensions and weight.

1.4 QUALITY ASSURANCE

a. Tests.

1. Rigid steel conduit shall pass the bending, ductility, and thickness of zinc coating tests described by ANSI C80.1.

2. Flexible conduit shall pass the tension, flexibility, impact, and zinc coating test described by UL 1.

3. Nonmetallic conduit and fittings shall pass the test requirements of NEMA TC2, UL 651 and 651A and Federal Specification W-C-1094A.

1.5 DELIVERY STORAGE AND HANDLING

a. Package conduit in 10-foot bundles maximum with conduit and coupling thread protectors suitable for indoor and outdoor storage. Package fittings in manufacturer's standard quantities and packaging suitable for indoor storage. Package plastic-coated rigid conduit, fittings, and bodies in such a manner as to protect the coating from damage during shipment and storage.

b. Store conduit above ground on racks to prevent corrosion and entrance of debris.

c. Protect plastic conduit from sunlight.

2.0 P R O D U C T S

2.1 ACCEPTABLE MANUFACTURERS

a. Rigid Steel Conduit.

1. Allied Tube and Conduit
2. Triangle Wire and Cable, Inc.
3. Wheatland Tube Company

b. PVC Coated Steel Conduit.

1. Occidental Coating Company (O-Cal Blue)
2. Robroy Industries, Inc. (Rob-Roy Red)

c. PVC Rigid Conduit.

1. Cantex
2. Carlon Industries, Inc.
3. Robroy Industries, Inc.

d. Conduit Fittings and Bodies.

1. Appleton Electric
2. Crouse-Hinds
3. Killark Electric Manufacturing Company
4. O-Z/Gedney

e. Liquidtight Flexible Conduit.

1. Anamet, Inc.

2. Electriflex Company

3. Triangle Wire and Cable, Inc.

2.2 MATERIALS AND EQUIPMENT

a. Design Conditions. Use electrical conduit, fittings, and bodies designed for service in areas as specified within this section to form a continuous support system for power, control, and instrument cables.

b. Conduit and Fittings

1. Rigid Steel Conduit and Fittings.

(a) Rigid steel conduit, rigid steel conduit bends, nipples, and bodies shall be hot-dipped galvanized and shall comply with the latest ANSI C80.1, UL 6, Federal Specification WW-C-581D, and NEC Article 346-15.
(b) Mild steel tubing shall be used for conduit, nipples, and couplings, and shall be free of defects on both the inner and outer surfaces.
(c) Fittings, bodies, and covers for rigid steel conduit shall be steel or cast-iron and shall comply with ANSI C80.4, UL 514B, and Federal Specification W-C-58C.

2. PVC-Coated Rigid Steel Conduit and Fittings.

(a) PVC-coated conduit, fittings, bodies, and covers shall conform to NEMA RN1 (Type A). Rigid steel galvanized conduit and fittings before coating shall conform to Federal Specification WW-C-581D, ANSI C80.1, and UL 6. Conduit bodies shall conform to UL 514B and Federal Specification W-C-58C. Provide sufficient coating for touch up after installation.
(b) PVC-coated couplings shall be of the ribbed type.
(c) Condulet covers shall have encapsulated stainless steel thumb screws.
(d) Condulets and covers shall be of mallable iron or feraloy material before coating.
(e) PVC coating shall be a minimum of 2 mil thickness on the interior of the conduit and the interior of fittings, condulets, covers and bodies.

3. Flexible and Liquidtight Flexible Metal Conduit and Fittings.

   (a) Use liquidtight flexible metal conduit manufactured in accordance with UL 1 and Federal Specification WW-C-566C.
   (b) Fittings used with liquidtight flexible metal conduit shall be the PVC- coated type and of such design as to thoroughly ground the conduit to the fittings, and through it to the box or enclosure to which it is attached.
   (c) Flexible couplings and fittings for use in hazardous areas shall comply with UL 886, NEC Article 501-4 (a&b), and Federal Specification W-C-586C.

4. PVC Conduit and Fittings. Use PVC conduit, bends, and fittings, which comply with NEMA TC2, W-C-A, and NEC Article 347-17 for above ground and underground installation. Conduit shall be schedule 80, unless shown or noted otherwise on drawings or in other specifications.

3.0 E X E C U T I O N

3.1 PREPARATION

a. Confirm submittal of shop drawing with conduit and conduit fitting, sizes, types and routing shown.

b. Ensure that the conduit system to be installed is sized properly for the cable and wire requirements.

c. Verify the actual physical conduit route from the conduit plan drawings and prepare the conduit support system.

d. Verify the equipment locations to which the conduit will be connected and determine detail requirements for connections.

3.2 INSTALLATION

a. Install PVC-coated conduits in all outdoor locations at wastewater facilities, inside valve vaults; in wet well slabs, in corrosive and wet environments and, where specifically noted on drawings.

b. Install rigid galvanized steel (RGS) conduits in dry inside locations and in all outdoor locations for water facilities and, where specifically noted otherwise on drawings.

c. Install PVC conduits in duct banks. For stub-ups, use PVC-coated rigid steel elbows or rigid steel elbows as applicable in A and B above or where specifically noted on drawings.

d. Run exposed conduit parallel or perpendicular to walls, ceilings or main structural members. Group multiple conduits together where possible. Do not install conduit where it interferes with the use of passageways, doorways, overhead cranes, monorails, equipment removal areas or working areas. In no case shall conduit routing present a safety hazard or interfere with normal plant operating and maintenance procedures. Maintain a minimum overhead clearance of 8'-0" in passageways.

e. Installation and support of conduit shall be from steel or concrete structures in accordance with the standard detail drawings. Furnish necessary conduit straps, clamps, fittings and support for the conduit in accordance with the standard details and consistent with the grade and type of conduit being installed.

f. Identify conduit at termination points like MCC, light fixtures, control panels, receptacles, and junction boxes.

g. Not more than 3 equivalent 90 degree bends will be permitted between outlets. Provide bonded expansion fittings at building expansion joints.

h. Install conduit runs so that they are mechanically secure, mechanically protected from physical harm, electrically continuous, and neat in appearance. The interiors of conduit shall provide clean, smooth raceways through which conductors may he drawn without damage to the insulation. Make threaded connections wrench tight.

i. Cut conduit square with a power saw or a rotary type conduit cutter designed to leave a flat face. Do not use plumbing pipe cutters for cutting conduit. Ream the cut ends of conduit with a reamer, designed for the purpose to eliminate rough edges and burrs. Cut threads with standard conduit dies providing 3/4-inch taper per foot, allowing the proper length so that joints and terminals may be made up tight and the ends of the conduit not deformed. Keep dies sharp and use a good quality threading oil continuously during the threading operation. Remove metal cuttings and oil from the conduit ends after the threads are cut and paint threads before connections are made. Use zinc rich, brush-on compound on the threads of steel conduit before connections are made. Use only tools specifically made for bending and installing PVC-coated or PVC conduit when installing these materials.

j. Use strap wrenches only to tighten joints in plastic coated rigid steel conduit. Replace all conduit and fittings with damage to the plastic coating, such as cuts, nicks and threader chuck jaw marks.

k. Make up changes in direction of conduit using elbows or fittings. Do not use pull boxes to make direction changes unless specifically designated otherwise.

l. Field fabricated bends shall be free of indentations or elliptical sections. The radius of the bend shall not be less than 6 times the smallest diameter of the raceway.

m. Protect all conduit terminations from mechanical injury. Prevent the entry of moisture and foreign mater into the conduit system by properly capping terminations.

n. Avoid trapped runs of conduit, if possible. When they are necessary, provide drainage using a "tee" condulet equipped with a drain. Conduit is likely to pass through areas with a temperature differential of 20 degrees F or more. Seal penetrations with a proper seal fitting at the wall or barrier between such areas. For conduit passing through walls separating pressurized areas from non-pressurized areas, install sealing fittings at the wall on the non-pressurized side.

o. Fit conduit crossing building or structure expansion joints with approved expansion fittings, except that fittings will not be required when conduit crossing an expansion joint is supported on trapeze hangers in such a way that at no time will the conduit be under stress due to expansion. Install bonding jumpers around expansion joint fittings.

p. Where conduit terminates in sheet metal enclosures and where no threaded hubs are provided, fit the conduit with double locknuts and bushings. Sheet metal enclosures located outside or in any other wet, damp or corrosive areas shall be furnished with threaded hubs. Restrict side penetrations to the lower one third of the enclosure.

q. Provide flexible metallic conduit where necessary to allow for movement or to localize sound or vibration, at transformers, at motors and any other rotating equipment unless shown otherwise on Drawings.

r. Seal openings or holes where conduits pass through walls or floors. When conduits are passing through a firewall or fire-rated floor into different rooms, cabinets, or enclosures, use a fire-rated seal as shown in the typical detail included in the Drawings. Certain walls, as indicated on the Drawings, require environmental (air-tight) seals; seal as shown.

s. Install explosion-proof seals in conduit runs crossing or entering a hazardous classified area, as shown on Drawings. Install type CSBE removable sealing fittings to seal pump cables in the wet well and at the first junction box outside the well.

t. Unless otherwise indicated on the Drawings, install expansion fittings every 300 feet within a straight conduit run and where conduit crosses building expansion joints, using bonding straps to ensure ground continuity.

u. Parallel runs of conduit may be supported by structural steel racks. When two or more racks are arranged one above the other, provide vertical separation of not less than 12 inches between racks, unless otherwise indicated on the Drawings. Space conduits on the racks at least enough to provide 1/4-inch clearance between hubs on adjacent conduits at terminations and to allow room for fittings.

v. Fill conduit racks no more than 75 percent of their capacity, providing usable space for future conduit. To ensure this, conduits leaving the rack horizontally shall be offset up or down so that future conduits may be installed in the space remaining. Construct conduit racks to permit access for wire or cable pulling at all pull points, even when future conduits are added to fill the racks.

w. Where conduit racks are supported on rods from beam clamps or by some other non-rigid suspension system, install rigid supports at no more than 50-foot intervals to give lateral stability to the rack.

x. Conduit racks or hangers must in no way interfere with machinery (or its operation), piping, structural members, process equipment, or access to anticipated future equipment. Refer to architectural, structural, equipment layout and piping drawings to ensure that this requirement is met. Label high voltage conduit with the circuit phase-to-phase voltage by means of a firmly attached tag or label of approved design at each conduit termination, on each side of walls or barriers pierced and at intervals not exceeding 200 feet along the entire length of the conduit.

y. Support conduit sizes 2 inches and larger at spacings not exceeding 10 feet and conduit sizes 1-1/2 inches and smaller at spacings not exceeding 8 feet.

z. The means of fastening conduit to supports shall be: by one hole malleable iron conduit straps secured by wood screws to wood and by bolts with expansion anchors to concrete or masonry; by "Korn" clamps or U-bolts to other surfaces. Use "clamp backs" when strapping conduits to walls, column faces, or other such surfaces.

aa. Support conduit runs with conduit clamps, hangers, straps and metal framing channel attached to structural steel members. Conduits of 1-1/2 inch size or less may be supported by one-hole conduit straps on concrete, tile or steel work, but for larger size conduit, use 2-hole straps. Use clamps of galvanized malleable iron for rigid galvanized conduit and PVC-coated or stainless steel for PVC-coated conduit. Metal framing channel straps used for PVC-coated conduit shall be type 3/16 stainless steel.

bb. Install conduits supported from building walls with at least 1/4-inch clearance from the wall to prevent the accumulation of dirt and moisture behind conduit.

cc. Size and space embedded conduits in structural slabs in accordance with the Uniform Building Code. Conduits should occupy no more than one-third the thickness of the slab and should not be closer than 3 times the largest diameter on center without additional reinforcement.

- - o 0 o - -

1.0 G E N E R A L

1.1 SECTION INCLUDES

a. Specifications for 600-volt building wire and cable.

1.2 REFERENCES

a. American National Standards Institute/National Fire Protection Association (ANSI/NFPA), NFPA 70 - National Electrical Code (NEC), Article 310 - Conductors for General Wiring.

b. Underwriter's Laboratories (UL)

1. UL 83: Thermoplastic Insulated Wires and Cables

2. UL 1063: Machine Tool Wires and Cables

c. American Society for Testing and Materials (ASTM)

1. ASTM B3: Soft or Annealed Copper Wires

2. ASTM B8: Concentric-Lay-Stranded Copper Conductors, Hard, Medium Hard, Soft

d. Insulated Cable Engineers Association (ICEA), ICEA S-61-402: Thermoplastic-Insulated Wire and Cable for the Transmission and Distribution of Electrical Energy (NEMA WC-5).

1.3 SUBMITTALS

a. Submit the following for Engineer’s approval.

1. Manufacturer's cut sheets and catalog data

2. Instruction for handling and storage

3. Dimensions and weight

1.4 QUALITY ASSURANCE

a. Tests. Cable shall meet all the requirements of Part 6 of ICEA S-61-402.

1.5 DELIVERY, STORAGE, AND HANDLING

a. Ship wire and cable on manufacturer's standard reel sizes unless otherwise specified. Where cut lengths are specified, mark reel footage accordingly. Each reel shall contain one continuous length of cable. Provide impact protection by wood lagging or suitable barrier across the traverse of the reel. Provide moisture protection by using manufacturer's standard procedure or heat shrinkable self-sealing end caps applied to both ends of the cable.

2.0 P R O D U C T S

2.1 ACCEPTABLE MANUFACTURERS

a. American Insulated Wire Corporation

b. Carol Cable Company, Inc.

c. General Cable Company

d. Okonite Company

e. Rome Cable Company

f. Triangle Wire and Cable, Inc.

g. Service Wire Company

2.2 MATERIALS AND EQUIPMENT

a. Design. Provide cable designated as THWN/THHN or XHHW single conductor type and UL 83 and UL 1063 listed, rated 600 volts and certified for continuous operation at maximum conductor temperature of 90 degrees C in dry locations and 75 degrees C in wet locations while installed in underground duct, conduit or in control panels (MTW).

b. Conductors. Provide conductors which are Class B, concentric stranded, annealed un-coated copper with physical and electrical properties complying with ASTM B3 and B8 and Part 2 of ICEA S-61-402.

c. Insulation. Each conductor shall be PVC insulated and nylon jacketed to meet the requirements of Part 3 of ICEA S-61-402. The insulation thickness shall match the dimensions listed in NEC Table 310-13 for type THHN and THWN wire.

d. Wire Marking

1. Wire marking shall be in accordance with NEC Article 310-11 and shall be printed on the wire insulation at 2-foot intervals.

2. The printing method used shall be permanent and the color shall sharply contrast with the jacket color.

e. The single conductor color coding shall be as follows:

System Voltage	A	B	C	Neutral
120/240 Volt 1Ph/3w	Black	Red		White
120/208 Volt 3Ph/4w	Black	Red	Blue	White
120/240 Volt 3Ph/4w	Black	Orange	Blue	White
277/480 Volt 3Ph/4w	Brown	Purple	Yellow	Grey

Motor Control	1.....Black
	2.....Red
	3.....Blue
Ground	.....Green

3.0 E X E C U T I O N

3.1 PREPARATION

a. Complete the cable raceway systems and underground duct banks before installing cables.

b. Verify sizing of raceways and pullboxes to ensure proper accommodation for the cables.

c. Check the length of the cable raceway system against the length of cable on the selected reel.

d. Clean conduits of foreign matter before cables are pulled.

3.2 INSTALLATION

a. Wiring Methods

1. Use wiring methods indicated on the Drawings

2. In general, use THHN/THWN or XHHW building wire for lighting, power and control wiring were conductors are enclosed in raceways such as above ground conduit system, underground duct banks, or inside control panels.

3. Do not use solid conductors.

4. Use conductors not smaller than No. 12 AWG stranded for lighting circuits.

5. Use conductors not smaller than No. 14 AWG for control circuits, except when part of a multiconductor cable or internal panel wiring.

6. In general, do not splice conductors unless approved by the Engineer.

7. Splices associated with taps for lighting and control circuits are allowed without approval.

8. Make splices in accessible junction boxes.

9. Use wire nuts with insulated caps for lighting wiring splices. Splice control circuit with insulated crimp connectors.

b. Single Conductor in Conduit and Ductbank

1. Install cables in accordance with the manufacturer's instructions and NEC Chapter 3 - Wiring Methods and Materials. Do not exceed maximum wire tension, maximum insulation pressure and minimum bending radius.

2. Pull cables into conduits using adequate lubrication to reduce friction. Lubricants must not be harmful to the conductor insulation.

c. Single Conductor in Cable Tray

1. Do not install single conductor building wire and cable in cable tray.

d. Preparation for Termination

1. Make 600-volt power cable terminations and splices with heat shrinkable sleeves and seals.

2. Terminal lugs and connectors for all sizes of conductors shall be crimp-on type.

3. For size 1/0 AWG and larger, crimp-on lugs shall have the long barrel with 2-hole tongues except in places where termination space is limited.

e. Tests

1. In general, test insulation integrity of the wiring system before terminating.

2. Make sure to disconnect sensitive electronic equipment before testing insulation.

3. Use a 500 VDC megohmmeter and perform the wire system insulation test in accordance with the operating instructions.

f. Termination

1. After the 600-volt wiring system has been tested with satisfactory results, reconnect wire.

- - o 0 o - -

1.0 G E N E R A L

1.1 SECTION INCLUDES

a. Specifications for device, pull, and junction boxes.

1.2 REFERENCES

a. American National Standards Institute/National Electrical Manufacturers Association (ANSI/NEMA).

1. FB1 - Fittings and Support for Conduits and Cable Assemblies

2. 250 - Enclosures for Electrical Equipment (1000 volts maximum)

b. American National Standards Institute/National Fire Protection Association (ANSI/NFPA), NFPA70 - National Electrical Code (NEC) - Article 370 - Outlet Device, Pull and Junction Boxes, Conduit Bodies and Fittings.

c. Underwriters Laboratories (UL):

1. 50 - Safety Cabinets and Boxes

2. 508 - Safety Industrial Control Equipment

3. 514B - Safety Fittings for Conduit and Outlet Boxes

4. 886 - Safety Outlet Boxes and Fittings for Use in Hazardous Areas

1.3 SUBMITTALS

a. Submit all products covered under this specification for Engineer’s approval.

1. Manufacturer's cut sheets, catalog data

2. Instruction for handling and storage

3. Installation instructions

4. Dimensions and weights

1.4 DELIVERY, STORAGE AND HANDLING

a. Pack and crate boxes to permit ease of handling and to provide protection from damage during shipping, handling and storage.

2.0 P R O D U C T S

2.1 ACCEPTABLE MANUFACTURERS

a. Sheet Metal Boxes

1. Hoffman Industrial Products
2. Pauluhn Electric Manufacturing Company
3. Hennessy
4. Tanco
5. Tejas
6. Circle A.W.

b. Cast Device Boxes

1. Appleton Electric Company
2. Crouse-Hinds, Division of Cooper Industries
3. Killark Electric Manufacturing Company

2.2 MATERIALS AND EQUIPMENT

a. Sheet Metal Boxes

1. Provide UL-approved junction boxes and pull boxes manufactured from stainless steel sheet metal and meeting requirements of NEMA 4X for corrosive and wet area, NEMA 250 and NEC Article 370.
2. Provide boxes with a stainless steel continuous hinge, closure hasps and all- stainless steel hardware.

3. Furnish the door with neoprene gasket and provision for padlock.

b. Device Boxes

1. Provide UL-approved boxes designed and manufactured to house electrical devices like receptacles and switches, and in conformance with NEMA FB1 and NEC Article 370.

2. Supply boxes that are hot-dip galvanized on cast iron suitable for corrosive and wet atmosphere.

c. Hardware

1. Mounting Hardware: Stainless steel

2. Conduit Connectors: Watertight as manufactured by Myers Hubs, or equal.

3.0 E X E C U T I O N

3.1 PREPARATION

a. Review the drawings and determine how many boxes of each kind are required and check if supplied quantity is sufficient.

3.2 INSTALLATION

a. Boxes described in this specification shall be used both in dry and wet, corrosive areas, both inside and outside locations.

b. Install boxes in accordance with NEC Article 370 in locations indicated on the Drawings.

c. Install junction and pull boxes in readily accessible places to facilitate wire pulls, maintenance and repair.

d. Plug unused conduit openings.

e. Make conduit connections to sheet metal boxes with watertight conduit connectors.

- - o 0 o - -

1.0 G E N E R A L

1.1 SUMMARY

a. Section Includes:

1. Outlet and device boxes.
2. Pull and junction boxes.
3. Floor boxes and service fittings.
4. Cabinets.
5. Hinged door enclosures.
6. Boxes and fittings for hazardous locations.

1.2 REFERENCES

a. American Society for Testing and Materials (ASTM):

1. ASTM A167-91 - Standard Specification for Stainless and Heat-Resisting Chromium-Nickel Steel Plate, Sheet, and Strip.

b. Underwriter's Laboratory (UL):

1. UL 50-88 - UL Standard for Safety Cabinets and Boxes.
2. UL 514A-91 - UL Standard for Safety Metallic Outlet Boxes.
3. UL 514B-89 - UL Standard for Safety Fittings for Conduit and Outlet Boxes.
4. UL 886-85- UL Standard for Safety Outlet Boxes and Fittings for Use in Hazardous (Classified) Locations.

c. National Electrical Manufacturer's Association (NEMA):

1. NEMA ICS 6-88 - Enclosures for Industrial Control and Systems.
2. NEMA OS 1-89 - Sheet-Steel Outlet Boxes, Device Boxes, Covers, and Box Supports.

3. NEMA 250-85- Enclosure for Electrical Equipment (1,000 v maximum).

1.3 DEFINITIONS

a. Cabinets: Enclosure designed either for surface or for flush mounting and having frame, or trim in which door or doors may be mounted.

b. Device Box: Outlet box designed to house receptacle device or wiring box designed to house switch.

c. Enclosure: Box, case, cabinet, or housing for electrical wiring or components.

d. Hinged Door Enclosure: Enclosure designed for surface mounting and having swinging doors or covers secured directly to and telescoping with walls of box.

e. Outlet Box: Wiring enclosure where current is taken from wiring system to supply utilization equipment.

f. Wiring Box: Enclosure designed to provide access to wiring systems or for mounting of indicating devices or of switches for controlling electrical circuits.

1.4 SUBMITTALS

a. Submit all products covered under this specification for Engineer's approval.

b. Product Data: Submit for cabinets and enclosures with classification higher than NEMA 1.

c. Shop Drawings: Submit to Engineer for approval.

1.5 QUALITY ASSURANCE

a. Items provided under this section shall be listed and labeled by UL or other Nationally Recognized Testing Laboratory (NRTL).

1. Term"NRTL" shall be as defined in OSHA Regulation 1910.7.

2. Terms "listed" and "labeled" shall be as defined in National Electrical Code, Article 100.

b. Regulatory Requirements:

1. National Electrical Code: Components and installation shall comply with NFPA 70.

2.0 P R O D U C T S

2.1 CABINETS, BOXES, AND FITTINGS, GENERAL

a. Electrical Cabinets, Boxes, and Fittings: Of indicated types, sizes, and NEMA enclosure classes. Where not indicated, provide units of types, sizes, and classes appropriate for use and location. Provide items complete with covers and accessories required for intended use. Provide gaskets for units in damp or wet locations.

2.2 MISCELLANEOUS MATERIALS AND FINISHES

a. Fasteners for General Use: Corrosion resistant screws and hardware including cadmium and zinc plated items.

b. Fasteners for Damp or Wet Locations: Stainless steel screws and hardware.

c. Fittings for Boxes, Cabinets, and Enclosures: Conform to UL 514B. Malleable iron or zinc plated steel for conduit hubs, bushings and box connectors.

d. Finishes:

1. Exterior Finish: Gray baked enamel for items exposed in finished locations except as otherwise indicated.

2. Interior Finish: Where indicated, white baked enamel.

2.3 METAL OUTLET, DEVICE, AND SMALL WIRING BOXES

a. General:

1. Conform to UL 514A and UL 514B.

2. Boxes shall be of type, shape, size, and depth to suit each location and application.

b. Steel Boxes: Conform to NEMA OS 1. Boxes shall be sheet steel with stamped knockouts, threaded screw holes and accessories suitable for each location including mounting brackets and straps, cable clamps, exterior rings and fixture studs.

c. Cast-Iron Boxes: Iron alloy, waterproof, with threaded raceway entries and features and accessories suitable for each location, including mounting ears, threaded screw holes for devices and closure plugs.

2.4 PULL AND JUNCTION BOXES

a. General: Comply with UL 50 for boxes over 100 cu in. volume. Boxes shall have screwed or bolted on covers of material same as box and shall be of size and shape to suit application.

b. Galvanized Steel Boxes: Flat rolled, code gauge, sheet steel with welded seams. Where necessary to provide rigid assembly, construct with internal structural steel bracing. Hot-dip galvanized after fabrication. Cover shall be gasketed.

c. Stainless-Steel Boxes: Fabricate of stainless steel conforming to Type 302 of ASTM A167. Where necessary to provide rigid assembly, construct with internal structural stainless steel bracing. Cover shall be gasketed.

d. Cast-Iron Boxes: Molded of cast iron alloy with gasketed cover and integral threaded conduit entrances.

e. Boxes Approved for Classified Locations: Cast metal or cast nonmetallic boxes conforming to UL 886 listed and labeled for use in specific location classification, and with specific hazardous material encountered. Conduit entrances shall be integral threaded type.

2.5 CABINETS

a. Comply with Plans.

3.0 E X E C U T I O N

3.1 INSTALLATION, GENERAL

a. Locations: Install items where indicated and where required to suit code requirements and installation conditions.

b. Cap unused knockout holes where blanks have been removed and plug unused conduit hubs.

c. Sizes shall be adequate to meet current NEC volume requirements, but in no case smaller than sizes indicated.

d. Remove sharp edges where they may come in contact with wiring or personnel.

3.2 APPLICATIONS

a. Outlet Boxes and Fittings: Install outlet and device boxes and associated covers and fittings of materials and NEMA types for each location in conformance with following requirements unless otherwise noted:

1. Interior Dry Locations: Sheet steel, NEMA type 1 for flush mounting and feraloy Type FS or FD cast boxes with threaded conduit hubs for surface mounting.

2. Locations Exposed to Weather or Dampness: Galvanized, cast metal, NEMA Type 3R.

3. Wet Locations: Stainless Steel, NEMA type 4X enclosures.

4. Corrosive Locations: Stainless Steel, NEMA type 4X enclosures.

5. Hazardous (Classified) Locations: NEMA type listed and labeled for location and class of hazard indicated.

b. Pull and Junction Boxes: Install pull and junction boxes of materials and NEMA types suitable for each location.

3.3 INSTALLATION OF OUTLET BOXES

a. Gasketed Boxes: At following locations use cast metal, threaded hub type boxes with gasketed weatherproof covers:

1. Exterior locations.

2. Where exposed to moisture laden atmosphere.

3. Where indicated.

b. Mounting: Mount outlet boxes for switches with long axis vertical or as indicated. Mount boxes for receptacles vertically. Gang boxes shall be mounted with long axis horizontal.

c. Cover Plates for Surface Boxes: Use plates sized to box front without overlap.

d. Set boxes in concealed conduit runs, flush with wall surfaces, with or without covers as required.

e. Set outlet boxes parallel to construction, securely mounted and adjusted to set true and flush with finished surface.

f. Provide outlet box divider barriers between 277/480 v and 120/240 v devices as required and per current NEC.

3.4 OUTLET BOX LOCATIONS

a. Locate flush mounted wall boxes in corner of nearest brick or block to keep cutting to minimum.

b. Location of outlets and equipment as shown on Drawings is approximate and exact location to be verified and shall be determined by:

1. Construction or code requirements.

2. Conflict with equipment or other trades.

3. Equipment manufacturer's drawings.

c. Minor modification in location of outlets and equipment considered incidental up to distance of 10 ft with no additional compensation, provided necessary instructions given prior to roughing in of outlet.

d. Mounting heights for devices and equipment to be measured from finished floor to centerline of device unless otherwise noted on Drawings.

3.5 INSTALLATION OF PULL AND JUNCTION BOXES

a. Box Selection: For boxes in main feeder conduit runs, use sizes not smaller than 8-in. square by 4-in. deep. Do not exceed 6 entering and 6 leaving raceways in single box. Quantities of conductors (including equipment grounding conductors) in pull or junction box shall not exceed following:

Size of Largest Conductors in Box	Maximum No. of Conductors in Box
No. 4/0 AWG	30
250 MCM	20
500 MCM	15
Over 500 MCM	10

1. Cable Supports: Install clamps, grids, or devices to which cables may be secured. Arrange cables so they may be readily identified. Support cable at least every 30 in. inside boxes.

2. Size: Provide pull and junction boxes for telephone, signal, instrumentation, control, and other systems at least 50% larger than would be required by Article 370 of NEC, or as indicated. Locate boxes strategically and provide shapes to permit easy pulling of future wires or cables of types normal for such systems.

3.6 INSTALLATION OF CABINETS AND HINGED DOOR ENCLOSURES (Not Applicable)

3.7 GROUNDING

a. Electrically ground metallic cabinets, boxes, and enclosures. Where wiring to item includes grounding conductor, provide grounding terminal in interior of cabinet, box or enclosure.

b. Ground in accordance with Section 16452.

3.8 CLEANING AND FINISH REPAIR

a. Upon completion of installation, inspect components. Remove burrs, dirt, and construction debris and repair damaged finish including chips, scratches, abrasions and weld marks.

b. Galvanized Finish: Repair damage using zinc-rich paint recommended by manufacturer.

c. Painted Finish: Repair damage using matching corrosion inhibiting touch-up coating.

- - o 0 o - -

1.0 G E N E R A L

1.1 SECTION INCLUDES

a. Specifications for wiring devices including:

1. Receptacles.

2. Wall switches.

3. Wall plates and cover plates.

1.2 REFERENCES

a. American National Standards Institute/National Electrical Manufacturers Association (ANSI/NEMA):

1. NEMA WD1 - General Purpose Wiring Devices.

2. NEMA WD6 - Dimensional Requirements.

b. Federal Specifications (WC-596F).

c. American National Standards Institute/National Fire Protection Association (NFPA):

1. NFPA No. 70 - National Electrical Code (NEC), Articles 210 Branch Circuits, 250 Grounding and 410, Paragraphs 56, 57 and 58.

1.3 SUBMITTALS

a. Submit all products covered under this specification for Engineer’s approval:

1. Manufacturer's product literature and specifications including dimensions, weights, certifications and instructions for handling, storage and installation.

1.4 DELIVERY, STORAGE AND HANDLING

a. Pack and crate devices to permit ease of handling and protect from damage during shipping, handling and storage.

2.0 P R O D U C T S

2.1 ACCEPTABLE MANUFACTURERS

a. Bryant Electric

b. Crouse-Hinds, Arrow Hart Division

c. Hubbel Inc. Wiring Devices Division

d. Leviton Manufacturing Company

e. Pass & Seymour/Legrand.

2.2 MATERIALS AND EQUIPMENT

a. Standards: Conform to NEMA WD1 for general requirements and NEMA WD6 for dimensional requirements.

b. Manufacture devices to heavy-duty industrial specification grade with brown nylon bodies (orange for isolated-ground receptacles) back and side wiring provisions and green-colored grounding screws.

c. Receptacles:

1. Duplex-type receptacles: Rated 20 amps at 120 volts.

2. Contacts: Brass or phosphor bronze.

3. Receptacle grounding system: Extend to the mounting strap unless isolated ground is indicated or required.

4. GFI or GFCI (ground fault circuit interrupter) receptacles: Provide feed-through type with test and reset button.

d. Wall Switches:

1. Toggle switches: Rated 20 amps at 120/277 volts AC rated for both resistive and inductive loads.

2. Contacts: Silver cadmium oxide construction to prevent sticking, welding and excessive pitting.

e. Cover Plates:

1. In outdoor, corrosive and wet areas, provide cover plates of cast metal, gasketed with spring-loaded hinged covers and stainless steel hardware.

2. All other plates: Type 302 stainless steel.

3.0 E X E C U T I O N

3.1 PREPARATION

a. Verify that device boxes are correctly placed.

b. Verify that the correct quantity, size and type of wires are pulled to each device box.

c. Verify that wiring has been checked at both ends.

d. Prepare wire ends for connection to devices.

e. Inspect each wiring device for defects.

3.2 INSTALLATION

a. Install products in accordance with manufacturer's instructions.

b. Install devices plumb and level.

c. Install switches with OFF position down.

d. Install receptacles with grounding pole on top.

e. Connect wiring device grounding terminal to outlet box with bonding jumper.

f. Connect wiring devices by wrapping conductors clockwise around screw terminals.

g. Install cover plates on switch, receptacle and blank outlets in finished areas.

h. Energize and test devices for proper operation.

- - o 0 o - -

1.0 G E N E R A L

1.1 SUMMARY

a. Section Includes:

1. Identification of electrical materials, equipment, and installations.

1.2 SUBMITTALS

a. Submit all products covered under this specification for Engineer's approval.

b. Product Data:

1. Submit for each type of product specified.

c. Samples:

1. Submit for each color, lettering style, and or graphic representation required for identification materials; samples of labels and signs.

d. Miscellaneous:

1. Schedule of identification nomenclature to be used for identification signs and labels.

1.3 QUALITY ASSURANCE

a. Regulatory Requirements:

1. National Electrical Code: Components and installation shall comply with NFPA 70.

b. Comply with ANSI C2.

2.0 P R O D U C T S

2.1 RACEWAY AND CABLE LABELS

a. Manufacturer's Standard Products: Where more than one type is listed for specified application, selection is Installer's option, but provide single type for each application category. Use colors prescribed by ANSI A13.1, NFPA 70, or as specified elsewhere.

b. Conform to ANSI A13.1, Table 3, for minimum size of letters for legend and minimum length of color field for each raceway or cable size.

1. Color: Black legend on orange field.

2. Legend: Indicates voltage.

c. Adhesive Labels: Preprinted, flexible, self adhesive vinyl. Legend is overlaminated with clear, wear and chemical resistant coating.

d. Pre-tensioned, Wraparound Plastic Sleeves: Flexible, preprinted, color coded, acrylic bands sized to suit diameter of line it identifies and arranged to stay in place by pre-tensioned gripping action when placed in position.

e. Colored Adhesive Tape: Self adhesive vinyl tape not less than 3 mils thick by 1 to 2 in. wide (0.08 mm thick by 25 to 51 mm wide).

f. Underground Line Warning Tape: Permanent, bright colored, continuous printed, vinyl tape with following features:

1. Size: Not less than 6 in. wide by 4 mils thick (152 mm wide by 0.102 mm thick).

2. Compounded for permanent direct burial service.

3. Embedded continuous metallic strip or core.

4. Printed Legend: Indicates type of underground line.

g. Tape Markers: Vinyl or vinyl cloth, self adhesive, wraparound type with preprinted numbers and letters.

h. Aluminum, Wraparound Marker Bands: Bands cut from 0.014 in. (0.4 mm) thick aluminum sheet, with stamped or embossed legend, and fitted with slots or ears for permanently securing around wire or cable jacket or around groups of conductors.

i. Plasticized Card Stock Tags: Vinyl cloth with preprinted and field printed legends. Orange background, except as otherwise indicated, with eyelet for fastener.

j. Aluminum Faced Card Stock Tags: Wear resistant, 18 point minimum card stock faced on both sides with embossable aluminum sheet, 0.002 in. (0.05 mm) thick, laminated with moisture resistant acrylic adhesive, and punched for fastener. Preprinted legends suit each application.

k. Brass or Aluminum Tags: Metal tags with stamped legend, punched for fastener. Dimensions: 2 by 2 in. (51 by 51 mm) by 0.05 in. (1.3 mm).

2.2 ENGRAVED NAMEPLATES AND SIGNS

a. Manufacturer's Standard Products: Where more than one type is listed for specified application, selection is Installer's option, but provide single type for each application category. Use colors prescribed by ANSI A13.1, NFPA 70, or as specified elsewhere.

b. Engraving stock, melamine plastic laminate, 1/16 in. (1.6 mm) minimum thick for signs up to 20 sq. in. (129 sq. cm), 1/8 in. (3.2 mm) thick for larger sizes.

1. Engraved Legend: Black letters on white face.

2. Punched for mechanical fasteners.

c. Baked Enamel Signs for Interior Use: Preprinted aluminum signs, punched for fasteners, with colors, legend, and size as indicated or as otherwise required for application. 1/4 in. (6.4 mm) grommets in corners for mounting.

d. Exterior, Metal Backed, Butyrate Signs: Wear resistant, nonfading, preprinted, cellulose acetate butyrate signs with 0.0396 in. (1 mm), galvanized steel backing, with colors, legend, and size appropriate to application. 1/4 in. (6.4 mm) grommets in corners for mounting.

e. Fasteners for Plastic Laminated and Metal Signs: Self tapping stainless steel screws or No. 10/32 stainless steel machine screws with nuts, flat washers and lock washers.

2.3 MISCELLANEOUS IDENTIFICATION PRODUCTS

a. Cable Ties: Fungus-inert, self extinguishing, 1 piece, self locking, Type 6/6 nylon cable ties with following features:

1. Minimum Width: 3/16 in. (5 mm).

2. Tensile Strength: 50 lb (22.3 kg) minimum.

3. Temperature Range: Minus 40 to 185° F (Minus 4 to 85° C).

4. Color: As indicated where used for color coding.

b. Paint: Alkyd-urethane enamel. Primer as recommended by enamel manufacturer.

3.0 E X E C U T I O N

3.1 INSTALLATION

a. Install identification devices according to manufacturer's written instructions.

b. Install labels where indicated and at locations for best convenience of viewing without interference with operation and maintenance of equipment.

c. Lettering, Colors, and Graphics: Coordinate names, abbreviations, colors, and or designations used for electrical identification with corresponding designations used in Contract Documents or required by codes and standards. Use consistent designations throughout Project.

d. Sequence of Work: Where identification is to be applied to surfaces that require finish, install identification after completion of finish work.

e. Self Adhesive Identification Products: Clean surfaces of dust, loose material, and oily films before applying.

f. Identify feeders over 600 V with "DANGER-HIGH VOLTAGE" in black letters 2 in. (51 mm) high, stenciled with paint at 10 ft (3 m) intervals over continuous, painted orange background. Identify following:

1. Entire floor area directly above conduits running beneath and within 12 in. (305 mm) of basement or ground floor that is in contact with earth or is framed above un-excavated space.

2. Wall surfaces directly external to conduits concealed within wall.

3. All accessible surfaces of concrete envelope around conduits in vertical shafts, exposed in building, or concealed above suspended ceilings.

4. Entire surface of exposed conduits.

g. Install painted identification as follows:

1. Clean surfaces of dust, loose material, and oily films before painting.

2. Prime Surfaces: For galvanized metal, use single component, acrylic vehicle coating formulated for galvanized surfaces. For concrete masonry units, use heavy duty, acrylic resin block filler. For concrete surfaces, use clear, alkali resistant, alkyd binder type sealer.

3. Apply one intermediate and one finish coat of silicone alkyd enamel.

4. Apply primer and finish materials according to manufacturer's instructions.

h. Identify Raceways and Exposed Cables of Certain Systems with Color Banding: Band exposed and accessible raceways of systems listed below for identification.

1. Bands: Pre-tensioned, snap around, colored plastic sleeves; colored adhesive tape; or combination of both. Make each color band 2 in. (51 mm) wide, completely encircling conduit, and place adjacent bands of 2 color markings in contact, side by side.

2. Locate bands at changes in direction, at penetrations of walls and floors, at 50 ft (15 m) maximum intervals in straight runs, and at 25 ft (7.6 m) in congested areas.

3. Colors: As follows:

   (a) Fire Alarm System: Red.
   (b) Fire Suppression Supervisory and Control System: Red and yellow.
   (c) Combined Fire Alarm and Security System: Red and blue.
   (d) Security System: Blue and yellow.
   (e) Mechanical and Electrical Supervisory System: Green and blue.
   (f) Telecommunications System: Green and yellow.

i. Install Caution Signs for Enclosures Over 600 V: Use pressure sensitive, self-adhesive label indicating system voltage in black, preprinted on orange field. Install on exterior of door or cover.

j. Install Circuit Identification Labels on Boxes: Label externally as follows:

1. Exposed Boxes: Pressure sensitive, self adhesive plastic label on cover.

2. Concealed Boxes: Plasticized card stock tags.

3. Labeling Legend: Permanent, water proof listing of panel and circuit number or equivalent.

k. Identify Paths of Underground Electrical Lines: During trench backfilling, for exterior underground power, control, signal, and communications lines, install continuous underground plastic line marker located directly above line at 6 to 8 in. (150 to 200 mm) below finished grade. Where multiple lines installed in common trench or concrete envelope do not exceed an overall width of 16 in. (400 mm), use single line marker.

1. Install line marker for underground wiring, both direct buried and in raceway.

l. Color Code Conductors: Secondary service, feeder, and branch circuit conductors throughout secondary electrical system.

1. Field applied, color coding methods may be used in lieu of factory coded wire for sizes larger than No. 10 AWG.

   (a) Colored, pressure sensitive plastic tape in half lapped turns for distance of 6 in. (150 mm) from terminal points and in boxes where splices or taps are made. Apply last 2 turns of tape with no tension to prevent possible unwinding. Use 1 in. (25 mm) wide tape in colors as specified. Adjust tape bands to avoid obscuring cable identification markings.

   (b) Colored cable ties applied in groups of 3 ties of specified color to each wire at each terminal or splice point starting 3 in. (76 mm) from terminal and spaced 3 in. (76 mm) apart. Apply with special tool or pliers, tighten to snug fit, and cut off excess length.

System Voltage	A	B	C	Neutral
120/240 Volt 1Ph/3w	Black	Red		White
120/208 Volt 3Ph/4w	Black	Red	Blue	White
120/240 Volt 3Ph/4w	Black	Orange	Blue	White
277/480 Volt 3Ph/4w	Brown	Purple	Yellow	Grey
Motor Control	1 Black			
	2 Red			
	3 Blue			
Ground	Green			

m. Power Circuit Identification: Use metal tags or aluminum wraparound marker bands for cables, feeders, and power circuits in vaults, pull boxes, junction boxes, manholes, and switchboard rooms.

1. Legend: 1/4 in. (6.4 mm) steel letter and number stamping or embossing with legend corresponding to indicated circuit designations.

2. Fasten tags with nylon cable ties; fasten bands using integral ears.

n. Apply identification to conductors as follows:

1. Conductors to Be Extended in Future: Indicate source and circuit numbers.

2. Multiple Power or Lighting Circuits in Same Enclosure: Identify each conductor with source, voltage, circuit number, and phase. Use color coding for voltage and phase indication of secondary circuit.

3. Multiple Control and Communications Circuits in Same Enclosure: Identify each conductor by its system and circuit designation. Use consistent system of tags, color coding, or cable marking tape.

o. Apply warning, caution, and instruction signs and stencils as follows:

1. Install warning, caution, and instruction signs where indicated or required to ensure safe operation and maintenance of electrical systems and of items to which they connect. Install engraved, plastic laminated instruction signs with approved legend where instructions or explanations are needed for system or equipment operation. Install butyrate signs with metal backing for outdoor items.

2. Emergency Operating Signs: Install engraved laminate signs with white legend on red background with minimum 3/8 in. (9 mm) high lettering for emergency instructions on power transfer, load shedding, and or emergency operations.

p. Install identification as follows:

1. Apply equipment identification labels of engraved plastic laminate on each major unit of equipment, including central or master unit of each system. This includes communication, signal, and alarm systems, unless units are specified with their own self-explanatory identification. Except as otherwise indicated, provide single line of text with 1/2 in. (13 mm) high lettering on 1 1/2 in. (38 mm) high label; where 2 lines of text are required, use lettering 2 in. (51 mm) high. Use black lettering on white field. Apply labels for each unit of following categories of equipment.

   (a) Panelboards, electrical cabinets, and enclosures.
   (b) Access doors and panels for concealed electrical items.
   (c) Electrical switchgear and switchboards.
   (d) Electrical substations.
   (e) Motor control centers.
   (f) Motor starters.
   (g) Push button stations.

(h) Power transfer equipment.
(i) Contactors.
(j) Remote controlled switches.
(k) Dimmers.
(l) Control devices.
(m) Transformers.
(n) Inverters.
(o) Rectifiers.
(p) Frequency converters.
(q) Battery racks.
(r) Power generating units.
(s) Telephone switching equipment.
(t) Clock/program master equipment.
(u) Call system master station.
(v) TV/audio monitoring master station.
(w) Fire alarm master station or control panel.
(x) Security monitoring master station or control panel.

2. Apply designation labels of engraved plastic laminate for disconnect switches, breakers, push buttons, pilot lights, motor control centers, and similar items for power distribution and control components above, except panelboards and alarm/signal components where labeling is specified elsewhere. For panelboards, provide framed, typed circuit schedules with explicit description and identification of items controlled by each individual breaker.

- - o 0 o - -

1.0 GENERAL

1.1 SUMMARY

a. Electric Utility Charges:

1. Electric Utility charges for extension of distribution system to point of service termination and meters will be paid by Owner.

1.2 DEFINITIONS

a. Electric Utility: Local Electric Power Company.

1.3 QUALITY ASSURANCE

a. Regulatory Requirements:

1. National Fire Protection Association (NFPA):

(a) NFPA No. 70-93 - National Electrical Code (NEC).

2.0 PRODUCTS

2.1 ELECTRIC SERVICE

a. Electric Service Characteristics:

1. As indicated on Drawings and provided by Electric Utility.

3.0 EXECUTION

3.1 PREPARATION

a. Confirmation of Electric Service:

1. Consult with Electric Utility to verify service information specified and shown on Drawings.

2. Include deviations required by Electric Utility from contract documents to comply with Electric Utility standards and requirements.

b. Metering:

1. Consult with Electric Utility regarding service entrance requirements and metering equipment.

2. Install metering equipment and empty conduit for metering conductors to meet standards and requirements of Electric Utility.

c. Application for Electric Service.

1. Obtain required forms from Electric Utility.
2. Assist Owner in completion of forms and deliver completed forms to Electric Utility.

3. Coordinate schedule for installation of electric service with Electric Utility.

- - o 0 o - -

1.0 G E N E R A L

1.1 SECTION INCLUDES

a. Underground electrical duct banks.

1.2 REFERENCES

a. National Fire Protection Association (NFPA): No. 70 - National Electrical Code (NEC) Appendix B.

1.3 SUBMITTALS

a. Submit all products covered under this specification for Engineer's approval.

b. Catalog cut sheets of the ducts and spacers.

1.4 DELIVERY, STORAGE AND HANDLING

a. Have duct spacers and associated hardware packed and crated to avoid damage during shipment and handling.

b. Clearly mark packages or crates stating that the material is for electrical duct banks only.

2.0 P R O D U C T S

2.1 ACCEPTABLE MANUFACTURERS

a. Thomas and Betts.

b. Underground Devices Inc.

c. Walker Division, Butler Manufacturing Company.

2.2 MATERIALS AND EQUIPMENT

a. Conduit. Construct ducts using schedule 80 rigid PVC conduit. Refer to Section 16111 - Conduit, Fittings and Bodies.

b. Spacers. Secure conduit with non-magnetic, universal, interlocking-type spacers for both horizontal and vertical duct arrangements.

c. Concrete. Use steel reinforced, red concrete as duct encasement.

3.0 E X E C U T I O N

3.1 PREPARATION

a. Verify from Drawings and field survey that the location of ductbanks does not interfere with any existing or new underground facilities.

b. Verify that materials are on site in proper condition and that sufficient quantity is on hand for the work.

c. Verify that trenches are in the correct places and prepared with sufficient depth and width to accommodate the duct banks, reinforcing rod, and concrete.

d. Be prepared for inspection of the duct banks before reinforcing rod is installed.

e. Before pouring concrete, verify that the ducts are free of debris and properly installed in the support and spacer systems and that the ducts are properly fitted together and firmly held in place by the hold down hardware.

f. Provide 24-hour notice to Engineer and the Local Code Inspector for cover-up inspection before pouring electrical conduit ductbanks.

3.2 INSTALLATION

a. Use the size and types of conduit as indicated on the Drawings for the various duct banks required for the project.

b. Make duct bank installations and penetrations through foundation walls watertight.

c. Assemble duct banks using non-magnetic saddles, spacers and separators. Position separators to provide 2-inch minimum concrete separation between the outer surfaces of the conduits.

d. Provide a 3-inch minimum concrete covering on both sides, top and bottom of concrete envelopes around conduits. Add red dye at the rate of 10 pounds per cubic yard to concrete used for envelopes for easy identification during subsequent excavation.

e. Firmly fix ducts in place during pouring of concrete. Carefully spade and vibrate the concrete to ensure filling of spaces between ducts.

f. Make bends with sweeps of radius not less than 6 times the smallest diameter of the raceway.

g. Make a transition from non-metallic to metallic rigid conduit where duct banks enter structures or turn upward for continuation above grade.

h. Make bends of 30 degrees or more using rigid galvanized steel.

i. Reinforce duct banks throughout, where indicated on the Drawings.

1. Unless otherwise noted on the Drawings, reinforce with No. 5 longitudinal steel bars placed at each corner and along each face at a maximum parallel spacing of 12 inches on centers, and No. 5 tie-bars transversely placed at 18-inch maximum longitudinal intervals.

2. Maintain a maximum clearance of 2 inches from bars to the edge of the concrete encasement.

j. Where ducts enter structures such as handholes, manholes, pullboxes, or buildings, terminate the ducts in suitable end bells, insulated L-bushings, Meyers hubs or couplings on steel conduits. Tag conduit entering pull boxes with stamped, stainless steel tags. Identify as designated in cable and conduit schedule.

k. Do not backfill with material containing large rock, paving materials, cinders, large or sharply angular substances, corrosive material, or other materials which can damage or contribute to corrosion of ducts or prevent adequate compaction of fill.

l. Install a bare stranded copper duct bank ground in each duct bank envelope. Make ground electrically continuous throughout the entire duct bank system. Connect ground to switchgear and MCC ground buses and to steel conduit extensions of the underground duct system.

m. After completion of the duct bank and prior to pulling cable, pull a mandrel, not less than 12 inches long and with a cross section approximately one-fourth inch less than the inside cross section of the duct, through each duct. Then pull a rag swab or sponge through to remove any particles of earth, sand or gravel that may have been left in the duct. Repull the rag or sponge swab until the swab emerges clean.

n. Use hemp rope to pull conductors into PVC conduit. Do not use nylon or wire cable for this purpose.

o. Install a warning ribbon approximately 12 inches below finished grade over underground duct banks. Refer to Section 16195 - Electrical Identification.

p. For manholes and pull boxes below grade, install wire racks to support cables properly around the perimeter and keep them dry.

q. For manholes and pull boxes below grade, construct a french drain, or other drainage as detailed on the Drawings.

- - o 0 o - -

1.0 G E N E R A L

1.1 SUMMARY

a. Section Includes:

1. Power factor correction equipment.

1.2 SUBMITTALS

a. Submit the following for Engineer's approval.

b. Product Data:

1. Include data on features, components, ratings, and performance.

c. Operating and Maintenance Data (O&M):

1. Maintenance data for system and products for inclusion in Operating and Maintenance Manual.

   (a) List of spare parts and replacement components recommended to be stored at site for ready access.
   (b) Detailed operating instructions covering operation under both normal and abnormal conditions.

1.3 QUALITY ASSURANCE

a. Manufacturer Qualifications: Firms experienced in manufacturing equipment of types and capacities indicated that have record of successful in-service performance.

b. Items provided under this section shall be listed or labeled by UL or other Nationally Recognized Testing Laboratory (NRTL).

1. Term "NRTL" shall be as defined in OSHA Regulation 1910.7.

2. Terms "listed" and "labeled" shall be as defined in National Electrical Code, Article 100.

c. Regulatory Requirements:

1. National Electrical Code (NEC): Components and installation shall comply with National Fire Protection Association (NFPA) 70.

1.4 MAINTENANCE

a. Extra Materials:

1. Furnish extra materials matching products installed, as described below, packaged with protective covering for storage, and identified with labels describing contents. Deliver extra materials to Owner.

2. Fuses: 1 for every 10 of each type and rating, but not less than 1 of each.

3. Blown Fuse Indicating Lamps: 1 for every 10 lamps, not less than 1 of each.

2.0 P R O D U C T S

2.1 SERVICE CONDITIONS

a. Environmental Conditions: Equipment withstands following environmental conditions while in operation without mechanical or electrical damage or degradation of operating capability:

1. Ambient Temperature: Minus 20°C to plus 40°C.

2. Altitude: Sea level to 500 ft.

2.2 CAPACITORS, GENERAL

a. Manufacturers:

1. Power Factor Correction Capacitors:

(a) Aerovox.
(b) ARCO Electric Products Corp.
(c) ASC Industries.
(d) Commonwealth Sprague by Capacitor, Inc.
(e) Delta-Star, Inc.
(f) Square D Co.

b. Capacitors: Comply with UL 819 and applicable requirements of NEMA CP1 and IEEE 18.

c. Construction: Multiple capacitor cells or elements wired together in 3-phase groups and mounted in metal enclosures.

d. Capacitor Cells: Dry metalized dielectric, self-healing type. Each cell is encapsulated in thermosetting resin inside plastic container.

e. Cell Rupture Protection: Equip each cell with an NRTL recognized pressure-sensitive interrupter.

f. Fuses for Protection of Capacitor Banks: Current-limiting, noninterchangeable type, factory-installed in each phase and located within equipment enclosure. Features include:

1. Interrupting Capacity: 200,000 amperes.

2. Fuse Ratings and Characteristics: As recommended by manufacturer for specific capacitor bank protected.

3. Blown Fuse Indicator: Neon lamps for each fuse, connected to light when fuse has opened, and visible from outside enclosure.

g. Enclosure: Steel or aluminum, arranged to contain fluid leakage from capacitor cells. Factory-equip with mounting brackets suitable for type of mounting indicated.

1. Indoor Enclosures: Dust-tight or as indicated.

2. Outdoor Enclosures: Gasketed doors or covers and equipped with watertight conduit connections.

2.3 FIXED CAPACITORS

a. Integrally fused except as indicated, with quantities, ratings, mounting provisions, and electrical connections as indicated.

b. Discharge Resistors: Factory-installed and -wired.

c. Internal Wiring: Completely factory-wired, ready for field connection to external circuits at single set of pressure terminals.

2.4 FACTORY FINISH

a. Finish: Manufacturer's standard enamel over corrosion-resistant treatment or primer coat.

2.5 SOURCE QUALITY CONTROL

a. Factory-test power factor correction equipment prior to shipment. Include following:

1. Routine capacitor production tests, including short-time overvoltage test, capacitance test, leak test, and dissipation factor test.

3.0 E X E C U T I O N

3.1 INSTALLATION

a. Mount equipment as indicated.

b. Install fixed capacitors near associated motor starter.

1. Connect on line side of motor starter overload elements and switch with motor.

2. Install fuse holders and fuses within capacitor enclosures.

c. Maintain minimum working space at live parts according to manufacturer's written instructions.

3.2 IDENTIFICATION

a. Identify components according to Section 16195.

3.3 FIELD QUALITY CONTROL

a. Testing: Test system functions, operations, and protective features according to manufacturer's written instructions.

b. Retest: Correct deficiencies identified by tests and observations and retest until specified requirements are met.

3.4 CLEANING

a. Upon completion of installation, inspect system components. Remove paint splatters and other spots, dirt, and debris. Touch up scratches and mars of finish to match original finish. Clean components internally using methods and materials recommended by manufacturer.

- - o 0 o - -

1.0 G E N E R A L

1.1 SUMMARY

a. Section includes:

1. Solid grounding of electrical systems and equipment.

2. Basic requirements for grounding for protection of life, equipment, circuits, and systems.

3. Grounding requirements specified in this Section may be supplemented in other sections of these Specifications.

1.2 REFERENCES

a. American Society for Testing and Materials (ASTM):

1. B3-90 - Standard Specification for Soft or Annealed Copper Wire.

2. B8-90 - Standard Specification for Concentric-Lay-Stranded Copper Conductors, Hard, Medium-Hard, or Soft.

3. B33-91 - Standard Specification for Tinned Soft or Annealed Copper Wire for Electrical Purposes.

4. E699 E1-79 - Standard Criteria for Evaluation of Agencies Involved in Testing, Quality Assurance, and Evaluating Building Components in Accordance with Test Methods Promulgated by ASTM Committee E-6.

b. National Fire Protection Association (NFPA):

1. NFPA 78-89 - Lightning Protection Code.

c. Underwriter's Laboratories (UL)

1. 467 84 - UL Standard for Safety Grounding and Bonding Equipment.

1.3 SUBMITTALS

a. Submit all products covered under this specification for Engineer’s approval.

b. Test Results:

1. Report of field tests and observations certified by Contractor.

1.4 QUALITY ASSURANCE

a. Items provided under this section shall be listed OR labeled by UL or other Nationally Recognized Testing Laboratory (NRTL).

1. Term "NRTL" shall be as defined in OSHA Regulation 1910.7.

2. Terms "listed" and "labeled" shall be as defined in National Electrical Code, Article 100.

b. Regulatory Requirements:

1. National Electrical Code (NEC): Components and installation shall comply with National Fire Protection Association (NFPA) 70.

2.0 P R O D U C T S

2.1 GROUNDING AND BONDING PRODUCTS

a. Products: Of types indicated and of sizes and ratings to comply with current NEC. Where types, sizes, ratings, and quantities indicated are in excess of current NEC requirements, more stringent requirements and greater size, rating, and quantity indications govern.

b. Conductor Materials: Copper.

2.2 WIRE AND CABLE CONDUCTORS

a. Comply with Section 16100. Conform to NEC Table 8, except as otherwise indicated, for conductor properties, including stranding.

b. Equipment Grounding Conductor: Green insulated.

c. Grounding Electrode Conductor: Stranded cable.

d. Bare Copper Conductors:

1. Solid Conductors: ASTM B3.

2. Assembly of Stranded Conductors: ASTM B8.

3. Tinned Conductors: ASTM B33.

2.3 MISCELLANEOUS CONDUCTORS

a. Ground Bus: Bare annealed copper bars of rectangular cross section.

b. Braided Bonding Jumpers: Copper tape, braided No. 30 gage bare copper wire, terminated with copper ferrules.

c. Bonding Strap Conductor/Connectors: Soft copper, 0.05 in. thick and 2 in. wide, except as indicated.

2.4 CONNECTOR PRODUCTS

a. General: Listed and labeled as grounding connectors for materials used.

b. Pressure Connectors: High-conductivity-plated units.

c. Bolted Clamps: Heavy-duty units listed for application.

d. Exothermic Welded Connections: Provide in kit form and select for specific types, sizes, and combinations of conductors and other items to be connected.

2.5 GROUNDING ELECTRODES

a. Ground Rods: Copper-clad steel with high-strength steel core and electrolytic-grade copper outer sheath, molten welded to core.

1. Size: 3/4 inch by 10 feet unless otherwise indicated.

b. Plate Electrodes: Copper plates, minimum 0.10 in. thick, size as indicated.

3.0 E X E C U T I O N

3.1 APPLICATION

a. Equipment Grounding Conductor Application: Comply with NEC Article 250 for sizes and

quantities of equipment grounding conductors, except where larger sizes or more conductors are indicated.

1. Install separate insulated equipment grounding conductors with circuit conductors.

   (a) Raceway may be used as equipment ground conductor where feasible in non-hazardous areas and permitted by current NEC for lighting circuits and receptacle circuits.
   (b) Install insulated equipment ground conductor in nonmetallic raceways unless designated for telephone or data cables.

b. Underground Conductors: Bare, tinned, stranded copper except as otherwise indicted.

c. Signal and Communications: For telephone, alarm, instrumentation and communication systems, provide #4 AWG minimum green insulated copper conductor in raceway from grounding electrode system to each terminal cabinet or central equipment location.

d. Ground separately derived systems required by NEC to be grounded in accordance with NEC paragraph 250-26.

e. Metal Poles Supporting Outdoor Lighting Fixtures: Ground pole to grounding electrode as indicated in addition to separate equipment grounding conductor run with supply branch circuit.

f. Connections to Lightning Protection System: Bond grounding conductors or grounding conductor conduits to lightning protection down conductors or grounding conductors in compliance with NFPA 78.

g. Common Ground Bonding With Lightning Protection System:

1. Bond electric power system ground directly to lightning protection system grounding conductor at closest point to electric service grounding electrode.

2. Use bonding conductor sized same as system ground conductor and installed in conduit.

3.2 INSTALLATION

a. General: Ground electrical systems and equipment in accordance with current NEC requirements except where Drawings or Specifications exceed NEC requirements.

b. Ground Rods:

1. Locate minimum of one-rod length from each other and at least same distance from any

other grounding electrode.

2. Interconnect ground rods with bare conductors buried at least 24 in. below grade.

3. Connect bare-cable ground conductors to ground rods by means of exothermic welds except as otherwise indicated.

4. Make connections without damaging copper coating or exposing steel.

5. Use 3/4-inch by 10-ft. ground rods except as otherwise indicated.

6. Drive rods until tops are 6 inches below finished floor or final grade except as otherwise indicated.

c. Metallic Water Service Pipe:

1. Provide insulated copper ground conductors, sized as indicated, in conduit from building main service equipment, or ground bus, to main metallic water service entrances to building.

2. Connect ground conductors to street side of main metallic water service pipes by means of ground clamps.

3. Bond ground conductor conduit to conductor at each end.

d. Braided-Type Bonding Jumpers:

1. Use elsewhere for flexible bonding and grounding connections.

e. Route grounding conductors along shortest and straightest paths possible without obstructing access or placing conductors where they may be subjected to strain, impact, or damage, except as indicated.

f. Test Wells: Locate as indicated, and fabricate in accordance with details indicated.

g. UFER Ground:

1. Fabricate with 20 feet of conductor laid lengthwise in excavation for foundation or footings.

2. Install so conductor is within 2 in. of bottom of concrete.

3. Where base of foundation is less than 20 feet in length, coil excess conductor at base of foundation.
4. Bond conductor to reinforcing steel at four locations, minimum.

5. Extend conductor below grade and connect to building grounding grid or grounding electrode.

3.3 CONNECTIONS

a. General: Make connections to minimize possibility of galvanic action or electrolysis. Select connectors, connection hardware, conductors, and connection methods so metals in direct contact will be galvanically compatible.

1. Use electroplated or hot-tin-coated materials to assure high conductivity and make contact points closer in order of galvanic series.

2. Make connections with clean bare metal at points of contact.

3. Aluminum to steel connections: stainless steel separators and mechanical clamps.

4. Aluminum to galvanized steel connections: tin-plated copper jumpers and mechanical clamps.

5. Coat and seal connections involving dissimilar metals with inert material such as red lead paint to prevent future penetration of moisture to contact surfaces.

b. Exothermic Welded Connections:

1. Use for connections to structural steel and for underground connections except those at test wells.

2. Install at connections to ground rods and plate electrodes.

3. Comply with manufacturer's written recommendations.

4. Welds that are puffed up or that show convex surfaces indicating improper cleaning are not acceptable.

c. Terminations:

1. Terminate insulated equipment grounding conductors for feeders and branch circuits with pressure-type grounding lugs.

2. Where metallic raceways terminate at metallic housings without mechanical and electrical connection to housing, terminate each conduit with grounding bushing.

3. Connect grounding bushings with bare grounding conductor to ground bus in housing.

4. Bond electrically noncontinuous conduits at both entrances and exits with grounding bushings and bare grounding conductors.

d. Tighten grounding and bonding connectors and terminals, including screws and bolts, in accordance with manufacturer's published torque tightening values for connectors and bolts. Where manufacturer's torquing requirements are not indicated, tighten connections to comply with torque tightening values specified in UL 486A and UL 486B.

e. Connections at Test Wells: Use compression-type connectors on conductors and make bolted- and clamped-type connections between conductors and ground rods.

f. Compression-Type Connections: Use hydraulic compression tools to provide correct circumferential pressure for compression connectors. Use tools and dies recommended by manufacturer of connectors. Provide embossing die code or other standard method to make visible indication that connector has been adequately compressed on ground conductor.

g. Moisture Protection: Where insulated ground conductors are connected to ground rods or ground buses, insulate entire area of connection and seal against moisture penetration of insulation and cable.

3.4 OVERHEAD LINE GROUNDING

a. General: Comply with ANSI C2, "National Electrical Safety Code" for "Single-Grounded Systems," using two electrodes in parallel if single electrode resistance to ground exceeds 25 ohms.

b. Ground Rod Connections: Use exothermic welds for underground connections and connections to rods.

c. Lightning Arresters: Separate arrester grounds from other ground conductors.

d. Secondary Neutral and Tank of Transformer: Interconnect and connect to ground.

e. Grounding Conductor Protection: Protect grounding conductors running on surface of wood poles with molding of a type manufactured for this purpose. Extend from grade level up to and through communications and transformer spaces.

3.5 UNDERGROUND DISTRIBUTION SYSTEM GROUNDING

a. Manholes and Handholes:

1. Install 3/4-inch by 10-ft. driven ground rod close to wall and set rod depth such that 4 inches will extend above finished floor.

2. Where necessary, install ground rod before manhole is placed and provide No. 1/0 bare tinned-copper conductor from ground rod into manhole through waterproof sleeve in manhole wall.

3. Protect ground rods passing through concrete floor with double wrapping of pressure-sensitive tape or heat-shrunk insulating sleeve from 2 in. above to 6 in. below concrete.

4. Seal floor opening with waterproof non-shrink grout.

b. Connections at Manholes:

1. Connect exposed metal parts, such as inserts, cable racks, pulling irons, ladders, and cable shields within each manhole or handhole to ground rod or ground conductor.

2. Make connections with minimum No. 4 AWG stranded hard-drawn copper wire.

3. Train conductors plumb or level around corners and fasten to manhole walls.

4. Connect to cable armor and cable shields by means of tinned terminals soldered to armor or shield, or as recommended by manufacturer of splicing and termination kits.

c. Grounding System: Ground non-current-carrying metallic items associated with manholes, substations, and pad-mounted equipment by connecting them to bare underground cable and grounding electrodes arranged as indicated.

3.6 FIELD QUALITY CONTROL

a. Test:

1. Subject completed grounding system to megger test at each location where maximum ground resistance level is specified, at service disconnect enclosure ground terminal, and at ground test wells.

2. Measure ground resistance without soil being moistened by any means other than natural precipitation or natural drainage or seepage and without chemical treatment or other artificial means of reducing natural ground resistance.

3. Perform tests by 2-point method in accordance with Section 9.03 of IEEE 81, "Guide for Measuring Earth Resistivity, Ground Impedance and Earth Surface Potentials of a Grounding System."

b. Ground/resistance maximum values shall be as follows:

1. Equipment rated 500 kVA and less: 10 Ohms.

2. Equipment rated 500 kVA to 1000 kVA: 5 Ohms.

3. Equipment rated over 1000 kVA: 3 Ohms.
4. Unfenced substations and pad-mounted equipment: 5 Ohms.

5. Manhole grounds: 10 Ohms.

c. Deficiencies: Where ground resistances exceed specified values, notify Engineer, and if directed by Engineer, modify grounding system to reduce resistance values. Where measures are directed that exceed those indicated, provisions of Contract covering changes will apply.

d. Report: Prepare test reports, certified by testing organization, of ground resistance at each test location. Include observations of weather and other phenomena that may affect test results. Describe measures taken to improve test results.

3.7 RESTORATION

a. Restore surface features at areas disturbed by excavation and reestablish original grades except as otherwise indicated.

b. Where sod has been removed, replace it as soon as possible after backfilling is completed.

c. Restore areas disturbed by trenching, storing of dirt, cable laying, and other Work to their original condition.

d. Include necessary topsoiling, fertilizing, liming, seeding, sodding, sprigging, or mulching.

e. Restore disturbed paving as indicated.

- - o 0 o - -

1.0 GENERAL

1.1 SCOPE

This section specifies motor control panel for use on a three-phase power system. Furnish and install motor control panel that conform to NEMA, Class II, Type C construction.

1.2 REFERENCE STANDARDS

The motor control panels must conform to requirements in the latest edition of the following publications:

a. ANSI C19.1959, Industrial Control Apparatus.

1.3 ACCEPTABLE MANUFACTURERS

a. In order to secure proper coordination and operation of the control functions, the Contractor must select a single automatic controls manufacturer as part of the contract requirements. The controls manufacturer will be fully responsible for proper setting and adjustment of control, alarm and indicating units.

b. The manufacturer selected must be experienced with the installation of motor control panels. Acceptable component manufacturers are Westinghouse, Square D., General Electric, and Allen Bradley or approved equal.

2.0 PRODUCTS

2.1 ENCLOSURE

a. Construction.

(1) Fabricate the enclosure from sheet metal to form a floor-mounted unit using not less than 14 H.S.G. cold-rolled stainless steel. Weld joints and grind smooth before finishing. Seal construction joints to impede entry of dust or moisture. Enclosure shall be NEMA 4X rated.

(2) Provide a single gasketed external door with substantial hinges installed in the vertical axis permitting it to swing open. Provide toggle latches around the perimeter of the door. Provide a pad lockable handle. Keyed locking handles are not acceptable.

(3) Provide hinged intercover panel to cover breakers, motor starters and relays. Each circuit breaker shall be provided a rod operated disconnect with interlocks to prevent opening of the hinged panel or panels unless breakers are in the off position.

b. Finish. The enclosure shall be constructed of 304 stainless steel.

c. Nameplates. Provide nameplates as specified in the section titled Electrical General Provisions.

(1) On the MCP prominently display a permanent nameplate giving the following information:

(a) Manufacturer

(b) Date of manufacture

(c) Voltage

(d) Phases

(e) Hertz

(f) Continuous current rating

2.2 DISCONNECT SWITCHES

a. Type. Provide circuit breaker disconnect switches as indicated. Make provision for padlocking in the open position.

b. Contacts. Quick-make, quick-break type.

c. Operators. Provide convenient and safe switch operators mounted through the panel door and permitting operating of the switch with the door closed.

d. Acceptable Manufacturers. Cutler-Hammer, General Electric, ITE, Square D, Westinghouse or approved equal.

2.3 COMBINATION STARTERS

a. Type. NEMA design Motor Circuit Protector type FVNR as noted. IEC components are not acceptable.

b. Overload Relays. The unit will include three (3) ambient-compensated, bimetallic thermal overload relays, set relays at the maximum value allowed by NEC Section 430-32, based on full-load amperes given on the motor nameplate.

c. Contactors. Size contactors according to NEMA standards. Provide three (3) main poles, and the number and type of auxiliary contacts to perform the required functions. Use double break contacts of silver.

d. Acceptable Manufacturers. General Electric, ITE, Square D, Westinghouse, Cutler-Hammer or approved equal.

2.4 PHASE MONITORING RELAYS

a. Type. Provide a 600-volt, industrial-rated, phase failure relay for motor circuits, as shown. Use a shunt-type device which functions independent of line current.

b. Operation. The relay will monitor line-to-line voltage through three (3) potential sensors. At l0 percent voltage unbalance, or on phase reversal, or a low phase potential, the relay will open the control circuit. Provide a 0.2-second time delay on trip-out to prevent nuisance tripping form transient voltage fluctuations.

c. Fuses. Provide one (1) fuse per phase ahead of the relay.

d. Phase Monitoring. For phase monitoring, use Diversified Electronics Cat. No. SLA-460-ALE.

2.5 CONTROLS

Selector switches and indicating lights shall be of same manufacture.

a. Switches.

(1) Type. Provide heavy-duty, oil-tight control switches, complete with factory legend plates.

(2) Acceptable Manufacturers. Cutler-Hammer, General Electric, Square D, Westinghouse, ITE or approved equal.

b. Indicating Lights.

(1) Type. Provide push-to-test, oil-tight indicating lights as manufactured by Cutler-Hammer, Square D, General Electric, ITE, Westinghouse or approved equal.

(2) Lamps. Use 3-watt, 120-volt lamps. Connect in series with a l000 ohm, 2-watt resistor.

(3) Lenses. Provide colored glass lenses to give the following indications:

Indication	Color
Equipment running	Green
Power On	Amber
Alarm	Red

c. Control Wiring. Controls, auxiliary equipment and circuits, including spare contacts, must be factory wired. Wiring must be continuous without splices from terminal to terminal. Identify terminal blocks with appropriate labels. Supply spare terminal blocks for points of external wiring connections.

d. Control Power Transformer. Provide one 480 volt to 120 volt dry type control transformer and associated circuit breakers as indicated on the drawings.

e. Control Relays. Control relays and wiring scheme is shown on the schematic wiring diagram for MCPI. Relay types and ratings are noted. All contacts or coils shall be rated for 120 volt, 60 hertz service.

2.6 SUBMITTALS

Submit complete electrical and dimensional drawings for the Motor Control Panel including control schematic.

- - o 0 o - -

1.0 G E N E R A L

1.1 SUMMARY

a. Section Includes:

1. Overcurrent protective devices (OCPDs) rated 600 V and below and switching devices commonly used with them.

1.2 REFERENCES

a. National Electrical Manufacturers Association (NEMA).

1. NEMA KS-1-83 - Enclosed Switches.

2. NEMA 250-85 - Enclosures for Electrical Equipment (1000 Volts Maximum).

3. NEMA FU1-86 - Low Voltage Cartridge Fuses.

4. NEMA AB1-86 - Molded Case Circuit Breakers and Molded Case Switches.

b. National Fire Protection Association (NFPA):

1. NFPA 70-90 - National Electrical Code (NEC).

c. Underwriters Laboratory (UL):

1. UL 98-87 - Enclosed and Dead Front Switches.

2. UL 198C-86 - High-Interrupting Capacity Fuses, Current-Limiting Types. Fifth Edition.

3. UL 198E-88 - Class R Fuses. Fourth Edition.

4. UL 486A-80 - Wire Connectors and Soldering Lugs for Use with Copper Conductors. Seventh Edition.

5. UL 489-86 - Molded-Case Circuit Breakers and Circuit-Breaker Enclosures. Seventh Edition.

6. UL 943-85 - Ground-Fault Circuit Interrupters. Second Edition.

7. UL 977-84 - Fused Power-Circuit Devices. Third Edition.

8. UL 198L-88 - UL Standard for Safety D-C Fuses for Industrial Use.

1.3 DEFINITIONS

a. Overcurrent Protective Device (OCPD): Device operative on excessive current that causes and maintains interruption of power in circuit it protects.

b. Ampere-Squared-Seconds: Expression of available thermal energy resulting from current flow. With regard to current-limiting fuses and circuit breakers, ampere-squared-seconds during fault current interruption represents energy allowed to flow before fuse or breaker interrupts fault current within its current limiting range.

1.4 SUBMITTALS

a. Submit all products covered under this specification for Engineer's approval.

b. Shop Drawings:

1. Spare fuse cabinet showing dimensions and features including storage provision for fused cartons, where shown on Plans.

c. Product Data:

1. Product data for fuses, fusible switches, circuit breakers, and OCPD accessories specified in this Section, including descriptive data and time-current curves for protective devices and let-through current curves for those with current limiting characteristics.

2. Include coordination charts and tables and related data.

d. Test Results:

1. Certified reports of field tests and observations.

1.5 QUALITY ASSURANCE

a. Items provided under this section shall be listed and labeled by UL or other Nationally Recognized Testing Laboratory (NRTL).

1. Term"NRTL" shall be as defined in OSHA Regulation 1910.7.

2. Terms "listed" and "labeled" shall be as defined in National Electrical Code, Article 100.

b. Regulatory Requirements:

1. Components and Installation:

a. NFPA 70 "National Electrical Code (NEC)."
b. Local codes and ordinances.

c. Single-Source Responsibility: Obtain similar OCPDs from single manufacturer.

1.6 MAINTENANCE

a. Extra Materials:

1. Maintenance Stock, Fuses: For types, voltage, and ampere ratings required, furnish 10% spare fuses, but not less than 1 set of 3 of each kind.

2.0 P R O D U C T S

2.1 OVERCURRENT PROTECTIVE DEVICES (OCPDs), GENERAL

a. General: Provide OCPDs in indicated types, as integral components of panelboards, switchboards, and motor control centers; and also as individually enclosed and mounted single units.

b. Enclosures: NEMA 250.

2.2 GENERAL FUSES

a. General: Provide fuses of types, classes, and current ratings as indicated. Voltage ratings shall be consistent with circuits on which used.

b. Fuses for Direct Current Circuits: UL 198L and marked for such use by manufacturer on fuse label.

c. Cartridge Fuse:

1. Manufacturers:

(a) Bussmann Div., Cooper Industries, Inc.

(b) Gould Shawmut.
(c) Littelfuse Inc.

2. NEMA Standard FU1, unless indicated otherwise, provide nonrenewable cartridge fuses of indicated types, classes, and current ratings that have voltage ratings consistent with circuits on which used.

3. Class CC Fuses: UL 198C.

4. Class J Fuses: UL 198C.

5. Class L Fuses: UL 198C.

(a) Current limiting threshold of 10 times current rating or less and time delay of 4 sec at 5 times rating.

6. Class RK1 and RK5 Dual Element Time-Delay Fuses: UL 198E.

7. Class RK1 Fast-Acting Fuses: UL 198E.

2.3 FUSIBLE SWITCHES

a. Manufacturers:

1. Square D Co.

2. General Electric

3. Eaton Corp.

4. Or equal.

b. UL 98 and NEMA KS 1 quick-make, quick-break heavy-duty units.

c. Rating: Load-breaking capacity in excess of normal horsepower rating for switch.

d. Withstand Capability: In excess of let-through current permitted by its fuse when subject to faults up to 100,000 RMS symmetrical amperes.

e. Operation: By means of external handle.

f. Interlock: Prevents access to switch interior except when in "off" position.

g. Fuse Clips: Rejection type.
h. Padlocking Provisions: For 2 padlocks, whether open or closed.

i. Enclosure for Switchboard or Panelboard Mounting: Suitable for panel mounting where indicated.

j. Enclosure for Switchboard Mounting: Provide individual mounting where indicated.

k. Enclosure for Independent Mounting: NEMA Type 0 as indicated or required to suit environment where located.

2.4 FUSED POWER CIRCUIT DEVICES

a. Manufacturers:

1. Pringle Electric Mfg. Co.

2. Square D Co.

3. Or equal.

b. UL 977, with either bolted-pressure-type or high-pressure contact-type switch.

c. Operation: As indicated.

d. Ground Fault Protection: Integral, self-powered type with mechanical ground fault indicator, test function, adjustable pick-up current and delay time with inverse and constant time characteristics, internal memory arranged to integrate intermittent arcing ground faults, and ground fault current sensor located as indicated.

e. Open Fuse Trip Device: Arranged to trip switch open if phase fuse opens.

f. Enclosure for Switchboard Mounting: Suitable for individual mounting.

g. Enclosure for Independent Mounting: NEMA Type 1 enclosure, as indicated or as required to suit environment where located.

h. Minimum Fault Current Rating: As indicated.

2.5 MOLDED-CASE CIRCUIT BREAKERS

a. Manufacturers Except as Indicated:

1. Square D Co.

2. General Electric

3. Eaton Corp.

4. Or equal.

b. UL 489 and NEMA AB 1.

c. Construction: Bolt-in type, except breakers in load-center-type panelboards and breakers 225-ampere frame size and larger may be plug-in type if held in place by positive locking device requiring mechanical release for removal.

d. Characteristics: Indicated frame size, trip rating, number of poles, and short-circuit interrupting capacity rating of 10,000 amperes symmetrical, unless greater rating is indicated on Drawings.

e. Tripping Device: Quick-make, quick-break toggle mechanism with inverse-time delay and instantaneous overcurrent trip protection for each pole.

f. Adjustable Instantaneous Trip Devices: Factory adjusted to low-trip-setting current values.

g. Enclosure for Switchboard or Panelboard Mounting: Suitable for panel mounting in switchboard or panelboards where indicated.

h. Enclosure for Switchboard or Motor Control Center Mounting: Provide individual mounting where indicated.

i. Enclosure for Independent Mounting: NEMA Type 1 enclosure, as indicated or required to suit environment where located.

j. Combination Circuit Breakers and Ground-Fault Circuit Interrupters: UL 943 arranged for sensing and tripping for ground-fault current in addition to overcurrent and short-circuit current.

1. Match features and module size of panelboard breakers and provide clear identification of ground fault trip function.

2. Trip Setting for Ground Fault: 4 to 6 milliamperes, listed and labeled as Class A, Type 1 device.

3. Trip Setting for Ground Fault: 30 milliamperes.

k. Current-Limiting Circuit Breakers: Arranged to limit let-through ampere-squared-seconds during fault conditions to value less than ampere-squared-seconds of one-half-cycle wave of prospective symmetrical fault current. Circuit breaker shall use no fusible devices in its operation. Current-limiting characteristic shall be in addition to normal time-delay and instantaneous-trip characteristics and other features as indicated.

l. Circuit Breakers With Solid-State Trip Devices: Provide indicated circuit breakers with solid-state trip devices having following features:

1. Ambient Compensation: Trip device insensitive to temperature changes between minus 20°C and plus 55°C.

2. Adjustability: Breaker ratings and trip settings shall be changeable by operation of controls on front panel of breaker, by change of plug-in element without removing breaker from mounting, or by combination of 2 methods.

3. Ground-Fault Tripping: Adjustable for pick-up and time-delay values. Provide for indicated units.

4. Provide clear plastic shield limiting access to rating plug and adjustments on solid state trip circuit breaker. Seal by attaching sealing wire through hole in posts provided. With wire seal installed, circuit breaker rating plug and adjustments shall not be "readily accessible."

2.6 INSULATED-CASE CIRCUIT BREAKERS

a. Manufacturers:

1. Square D Co.

2. General Electric

3. Or equal.

b. UL 489 and NEMA AB 1.

c. Ratings: Continuous-current, interrupting, and short-time-current ratings, and voltage and frequency ratings as indicated.

d. Operating Mechanism: Mechanically and electrically trip-free, stored-energy operating mechanism with following features:

1. Moving Contacts Closing Speed: Independent of both control and operator.

e. Circuit-Breaker Trip Devices: Solid-state overcurrent trip device system that includes 1 integrally mounted current transformer or sensor per phase, release mechanism, and following features:

1. Functions: Long-time-delay, short-time-delay, and instantaneous-trip functions, which are independent of each other in both action and adjustment.

2. Temperature compensation to assure accuracy and calibration stability from minus 20°C to plus 55°C.

3. Field-adjustable, time-current characteristics.

4. Current Adjustability: Effected by operating controls on front panel or by changing plug-in elements or current transformers or sensors.

5. Three bands for long-time- and short-time-delay functions marked "minimum," "intermediate," and "maximum."

6. Five pickup points, minimum, for long-time- and short-time-trip functions.

7. Six pickup points, minimum, for instantaneous-trip functions.

8. Ground fault protection with at least 3 short-time-delay settings and 37 trip-time-delay bands. Adjustable current pickup.

9. Trip Indication: Labeled lights or mechanical indicators on trip device shall indicate type of fault causing breaker trip. If lights are used, integral power source shall maintain indication for 60 hrs, minimum.

f. Auxiliary Contacts for Remote Indication: Where remote indication of breaker position is indicated, provide spare auxiliary switch in addition to other auxiliary switches required for normal breaker operation. Spare auxiliary switch shall consist of 2 Type "a" and 2 Type "b" stages (contacts), wired to terminal block in breaker housing.

g. Draw out Features: Circuit-breaker mounting assembly equipped with racking mechanism that properly positions power circuit breaker and holds it rigidly in connected, test, and fully disconnected positions and includes following features:

1. Interlock arrangement, preventing movement of circuit breaker to or from connected position when it is in closed position and closure of circuit breaker unless it is in connected, test, or disconnected position.

2. Construction, permitting racking open circuit breaker to or from connected, test, and disconnected positions with associated compartment door closed or equivalent dead-front barrier protection, and manual withdrawal to position for removal from structure with door open.

3. Primary disconnecting devices disengaged and secondary disconnecting devices engaged when breaker is in test position.

4. Primary and secondary devices disengaged when circuit breaker is in disconnected position.

5. Ground contact engaged when circuit-breaker element is in connected and test positions.

h. Circuit-Breaker Features and Accessories: Include following:

1. Padlocking Provisions: For installing at least 2 padlocks on each breaker to secure its enclosure and prevent movement of draw out mechanism.

2. Operating Handle: Provide 1 for each manually operated breaker. No handle ties are permitted.

3. Electric Close Button: Provide 1 for each electrically operated breaker.

4. Indicating Lights: Contacts for "Breaker Open" and "Breaker Closed," for main and bus tie circuit breakers, and for other indicated breakers.

2.7 OCPD ACCESSORIES

a. Key Interlocks: Arrange interlocking so keys are held captive at devices indicated. Where future key interlocking provisions are indicated, provide necessary mountings and hardware as required for future installation.

b. Instantaneous Undervoltage Trip Device: For indicated OCPDs.

c. Adjustable-Time-Delay Undervoltage Trip Devices: For indicated OCPDs.

d. Shunt-Trip Devices for Circuit Breakers: Where indicated, arrange to trip breaker from external source of power through control switch or relay contacts.

2.8 SPARE FUSE CABINET (Where Indicated)

a. Cabinet: Wall-mounted, 18 gauge minimum steel unit with full-length, recessed piano-hinged door with key coded cam lock and pull.

b. Size: Provide for orderly storage of all spare fuses of this project plus 15 percent spare capacity, minimum.

c. Finish: Gray baked enamel.

d. Cabinet Door: Bear legend in stencilled 1-1/2-inch high letters, "Spare Fuses."

3.0 E X E C U T I O N

3.1 INSTALLATION

a. Fuses:

1. Install fuses in fusible devices indicated.

b. Independently Mounted OCPDs:

1. Locate as indicated and install in accordance with manufacturer's written installation instructions.

c. Factory install OCPDs furnished in distribution equipment.

3.2 APPLICATION OF FUSES

a. Control Circuits: Class CC, time delay.

b. General Purpose Fusible Switches: Apply following class and types:

1. 30-600 Amperes: Class J or RK1, time delay.

2. 601-6,000 Amperes: Class L, time delay.

(a) Size at 125% of motor FLA not to exceed 150%.
(b) For transformers, size 12 times FLA for .1 second and 25 times for 0.1 second.
(c) Size at 100% of load for mains and feeders with non-inductive loads.

c. Combination Starters: Class J or RK1, time delay.

d. Bolted Pressure Switches: Class L, time delay.

3.3 IDENTIFICATION

a. Identify with components as specified in Section 16195.

3.4 CONTROL WIRING INSTALLATION

a. Install wiring between OCPDs and control/indication devices as specified in Section 16120 for hard wired connections.

3.5 CONNECTIONS

a. Check connectors, terminals, bus joints, and mountings for tightness.

b. Tighten field-connected connectors and terminals, including screws and bolts, in accordance with equipment manufacturer's published torque tightening values. Where manufacturer's torquing requirements are not indicated, tighten connectors and terminals to comply with tightening torques specified in UL 486A and UL 486B.

3.6 GROUNDING

a. Provide equipment grounding connections for individually mounted OCPD units as indicated and as required by NEC. Tighten connectors to comply with tightening torques specified in UL Standard 486A to assure permanent and effective grounding.

b. Ground in accordance with Section 16452.

3.7 COORDINATION STUDY

a. Where coordination study recommends changes in types, classes, features or ratings of equipment or devices those indicated, make written request for instructions. Obtain instructions from Engineer before ordering equipment or devices recommended to be changed.

3.8 FIELD QUALITY CONTROL

a. Manufacturer's Field Services:

1. Supplier's or manufacturer's technician for equipment specified herein shall be present at job site or classroom designated by Owner for minimum of 1/2 workday, travel time excluded, for assistance during plant construction, plant startup, equipment adjustment, and training of Owner's personnel for plant operation. Include minimum of:

   (a) 1/2 manday for Instructional Services.

2. Supplier or manufacturer shall direct services to specific system and equipment operation, maintenance, and troubleshooting.

b. Testing:

1. Reports: Prepare certified written reports on tests and observations. Report defective materials and workmanship and unsatisfactory test results. Include complete records of repairs and adjustments made.

2. Labeling: Upon satisfactory completion of tests and related effort, apply label to tested components indicating test results, date, and responsible person.

3. Schedule visual and mechanical inspections and electrical tests with at least 1 week's advance notification.

4. Pretesting: Upon completing installation of system, perform following preparations for tests:

   (a) Make insulation resistance tests of OCPD buses, components, and connecting supply, feeder, and control circuits.
   (b) Make continuity tests of circuits.
   (c) Include full updating on final system configuration and parameters where they supplement or differ from those indicated in original Contract Documents.
   (d) Comply with manufacturer's instructions for installation and testing of OCPDs.

5. Visual and mechanical inspection: Include following inspections and related work.

   (a) Overcurrent-Protective-Device Ratings and Settings: Verify indicated ratings and settings to be appropriate for final system arrangement and parameters. Where discrepancies are found, test organization shall recommend final protective

device ratings and settings. Use accepted revised ratings or settings to make final system adjustments.

(b) Inspect for defects and physical damage, NRTL labeling, and nameplate compliance with current single line diagram.

(c) Exercise and perform operational tests of mechanical components and other operable devices in accordance with manufacturer's instruction manual.

(d) Check tightness of electrical connections of OCPDs with calibrated torque wrench. Refer to manufacturer's instructions for proper torque values.

(e) Clean OCPDs using manufacturer's approved methods and materials.

(f) Verify installation of proper fuse types and ratings in fusible OCPDs.

6. Electrical Tests: Include following items performed in accordance with manufacturer's instructions:

(a) Insulation resistance test of OCPD conducting parts. Insulation resistance less than 100 megohms is not acceptable.

(b) Verify trip unit reset characteristics for insulated-case circuit breakers.

(c) Make adjustments for final settings of adjustable-trip devices.

(d) Activate auxiliary protective devices such as ground fault or undervoltage relays, to verify operation of shunt-trip devices.

(e) Check stored-energy charging motors for proper operation of motor, mechanism, and limit switches.

(f) Check operation of electrically operated OCPDs in accordance with manufacturer's instructions.

g) Check key and other interlock and safety devices for operation and sequence. Make closing attempts on locked-open and opening attempts on locked-closed devices including moveable barriers and shutters.

7. Retest: Correct deficiencies identified by tests and observations and retest. Verify by system tests that specified requirements are met.

3.9 CLEANING

a. Upon completion of installation, inspect OCPDs. Remove paint splatters and other spots, dirt, and debris. Touch up scratches and mars of finish to match original finish.

- - o 0 o - -

1.0 G E N E R A L

1.1 SUMMARY

a. Section Includes:

1. Service disconnects.

2. Feeder and equipment disconnects.

3. Enclosed circuit breakers.

1.2 SUBMITTALS

a. Submit the following for Engineer's approval.

b. Product Data:

1. Submit for switches, circuit breakers, and accessories.

2. Descriptive data and time-current curves for protective devices and let-through current curves for those devices with current-limiting characteristics. Include coordination charts and tables, and related data.

c. Shop Drawings:

1. Wiring diagrams detailing power and control wiring and differentiating clearly between manufacturer-installed wiring and field-installed wiring.

d. Test Results:

1. Field test reports indicating and interpreting test results.

e. Operating and Maintenance Data:

1. Maintenance data for tripping devices.

1.3 QUALITY ASSURANCE

a. Items provided under this section shall be listed or labeled by UL or other Nationally Recognized Testing Laboratory (NRTL).

1. Term "NRTL" shall be as defined in OSHA Regulation 1910.7.

2. Terms "listed" and "labeled" shall be as defined in National Electrical Code, Article 100.

b. Regulatory Requirements:

1. National Electrical Code (NEC): Components and installation shall comply with National Fire Protection Association (NFPA) 70.

c. Single-Source Responsibility: Enclosed switches and circuit breakers shall be product of single manufacturer.

2.0 P R O D U C T S

2.1 MANUFACTURERS

a. Fusible Switches:

1. Square D Co.

2. Cutler-Hammer Products/Westinghouse Electric Co.

b. Fused Power Circuit Devices:

1. Square D Co.

2. Boltswitch.

c. Molded-Case Circuit Breakers:

1. Square D Co.

2. Cutler-Hammer Products/Westinghouse Electric Co.

d. Combination Circuit Breaker and Ground Fault Trip:

1. Square D Co.

2. Cutler-Hammer Products/Westinghouse Electric Co.

\

e. Molded-Case Current-Limiting Circuit Breakers:

1. Square D Co.

2. Cutler-Hammer Products/Westinghouse Electric Co.

2.2 ENCLOSED SWITCHES

a. Enclosed Non-fusible Switch: NEMA KS 1, Type HD handle lockable with 2 padlocks.

b. Enclosed Fusible Switch, 800 Amperes and Smaller: NEMA KS 1, Type HD, clips to accommodate specified fuses, enclosure consistent with environment where located, handle lockable with 2 padlocks, and interlocked with cover in CLOSED position.

c. Enclosed Fusible Switch Larger Than 800 Amperes: Bolted-pressure or high-pressure contact switch, bus drilled to accommodate specified fuses, enclosure consistent with environment where located.

1. Minimum Fault Current Rating: 100,000 symmetrical rms amperes.

2.3 ENCLOSED CIRCUIT BREAKERS

a. Enclosed Molded-Case Circuit Breaker: NEMA AB 1, handle lockable with 2 padlocks.

b. Characteristics:

1. Frame size, trip rating, number of poles, and auxiliary devices as indicated

2. Interrupting capacity rating to meet available fault current, 10,000 symmetrical rms amperes minimum

3. Appropriate application listing when used for switching fluorescent lighting loads or heating, air conditioning, and refrigeration equipment.

3.0 E X E C U T I O N

3.1 INSTALLATION

a. Install enclosed switches and circuit breakers in locations as indicated, according to manufacturer's written instructions.

b. Install enclosed switches and circuit breakers level and plumb.

c. Install wiring between enclosed switches and circuit breakers and control/indication devices.

d. Connect enclosed switches and circuit breakers and components to wiring system and to ground as indicated and instructed by manufacturer. Tighten connectors and terminals, including screws and bolts according to equipment manufacturer's published torque tightening values for equipment connectors. Where manufacturer's torquing requirements are not indicated, tighten connectors and terminals according to tightening torques specified in UL Standard 486A.

3.2 FIELD QUALITY CONTROL

a. Manufacturer's Field Services:

1. Supplier's or manufacturer's representative for equipment specified herein shall be present at job site or for assistance during plant construction, plant startup, and training of Owner's personnel for plant operation.

b. Testing: After installing enclosed switches and circuit breakers and after electrical circuitry has been energized, demonstrate product capability and compliance with requirements.

1. Procedures: Perform each visual and mechanical inspection and electrical test stated in NETA Standard ATS, Section 7.5 for enclosed switches and Section 7.6 for molded-case circuit breakers. Certify compliance with test parameters.

2. Correct malfunctioning units at site, where possible, and retest to demonstrate compliance; otherwise, remove and replace with new units, and retest.

c. Training:

1. Train Owner's maintenance personnel on procedures and schedules for startup and shutdown, troubleshooting, servicing, and preventive maintenance.

2. Review operating and maintenance data.

3.3 ADJUSTING

a. Set field-adjustable enclosed switches and circuit breaker trip ranges as indicated.

3.4 CLEANING

a. After completing system installation, including outlet fittings and devices, inspect exposed finish. Remove burrs, dirt, and construction debris and repair damaged finish including chips, scratches, and abrasions.

- - o 0 o - -

1.0 G E N E R A L

1.1 SUMMARY

a. Section Includes:

1. ac motor control devices rated 600 v and below.

b. Overcurrent protective devices and disconnect switches used with motor controllers are specified in Section 16475.

1.2 DEFINITIONS

a. Motor Controller: Device that controls, protects, and energizes electric motor, and where required, controls its speed or torque or power delivered by it.

1.3 SUBMITTALS

a. Submit the following for Engineers approval.

1. Product Data:

(a) Include dimensions, ratings, and data on features and components.

2. Test Results:

(a) Certified reports of field tests and observations.

3. Miscellaneous:

(a) Load Current and Overload Relay Heater List: Compiled by Contractor after motors have been installed. Arrange list to demonstrate selection of heaters to suit actual motor nameplate full load currents.

4. Operation and Maintenance (O&M) Data:

(a) Manufacturer's data on maintenance and operation of equipment.

1.4 QUALITY ASSURANCE

a. Single-Source Responsibility: Obtain similar motor-control devices from single manufacturer.

b. Manufacturer Qualifications:

1. Provide controllers from manufacturers regularly engaged in manufacture of equipment of types and capacities indicated, with such products in satisfactory use in similar service for not less than 5 yrs.

c. Items provided under this section shall be listed or labeled by UL or other Nationally Recognized Testing Laboratory (NRTL).

1. Term "NRTL" shall be as defined in OSHA Regulation 1910.7.

2. Terms "listed" and "labeled" shall be as defined in National Electrical Code (NEC), Article 100.

d. Regulatory Requirements:

1. National Electrical Code (NEC): Components and installation shall comply with National Fire Protection Association (NFPA) No. 70.

1.5 COORDINATION

a. Coordinate features of controllers and control devices with pilot devices and control circuits provided under other sections of Specifications covering control systems.

1.6 MAINTENANCE

a. Extra Materials:

1. Spare Fuses and Incandescent Indicating Lamps: Furnish one spare for every 5 installed units, but not less than one set of 3 of each kind.

2.0 P R O D U C T S

2.1 MANUFACTURERS

a. Manual and Magnetic Motor Controllers:

1. Square D Company.

2. Westinghouse Electric Corporation.

3. Eaton Corporation.

4. Furnas Electric Controls.

5. or, approved equal.

2.2 MOTOR CONTROLLERS, GENERAL

a. Coordinate features of each motor controller with ratings and characteristics of supply circuit, motor, required control sequence, duty cycle of motor, drive, and load, and pilot device, and control circuit affecting controller functions. Provide controllers horsepower rated to suit motor controlled.

b. NEMA Size 1 minimum.

c. Contacts shall open each ungrounded connection to motor.

d. Overload Relays:

1. Ambient-compensated type with inverse-time-current characteristic.

2. Provide with heaters or sensors in each phase matched to nameplate full load current of specific motor to which connected with appropriate adjustment for duty cycle.
3. Enhanced Protection Overload Relay: Provide overload relays with NEMA Class 10 tripping characteristics for submersible equipment or where indicated. Select to protect motor against voltage unbalance and single phasing.

e. Enclosures:

1. For individually mounted motor controllers and control devices, comply with NEMA 250.

2. Provide enclosures suitable for environmental conditions at controller location.

3. Provide NEMA Type enclosures as indicated or required to suit environment where located.

2.3 MANUAL MOTOR CONTROLLERS

a. Quick-make, quick-break toggle action.

b. Doublebreak silver alloy contacts.

c. Pilot light.

d. Padlocking provision.

2.4 MAGNETIC MOTOR CONTROLLERS

a. Full voltage, nonreversing, across-the-line, magnetic controller, except where another type indicated.

b. Control Circuit: 120 v. Control power transformer integral with controller where no other supply of 120 v control power to controller indicated. Control power transformer with adequate capacity to operate connected pilot, indicating and control devices, plus 100% spare capacity.

c. Combination Controller: Switch type; fused or nonfused as indicated; quick-make, quick-break switch; factory assembled with controller and arranged to disconnect it. For fused switches, provide rejection type fuse clips and fuses rated as indicated.

d. Combination Controller: Motor circuit protector; molded case circuit breaker type with magnetic only trip element calibrated to coordinate with actual locked rotor current of connected motor and controller overload relays. Provide breakers factory-assembled with controller, interlocked with unit cover or door, and arranged to disconnect controller. Provide motor circuit protectors with field-adjustable trip elements.

e. Overvoltage/Undervoltage/Phase-Failure Relays: Solid-state sensing circuit with isolated output contacts for hard-wired connection. Provide adjustable undervoltage setting.

1. Provide in starter enclosure for Size 2 and larger starters.

2. Delay initial motor start.

3. Delay motor restart due to starter dropout caused by undervoltage or starter coil circuit interruption for maintained control circuits.

4. Adjustable on delay from 0.15 to 30.0 sec set at 10.0 sec.

5. Connect control relay in motor starter coil circuit.

6. Coordinate control relay selection with motor starter to cause motor starter to drop out at voltage slightly higher than dropout voltage of starter and have dropout time slightly faster than motor starter to ensure if motor starter drops out, relay will drop out.

2.5 AUXILIARY CONTROL DEVICES

a. General: Furnish auxiliary control device as shown on 1-line diagrams, Drawings, or as specified. Factory-install in controller enclosure except as otherwise indicated.

b. Pushbutton Stations, Pilot Lights, and Selector Switches: Heavy duty type.

c. Stop Pushbutton Station: Momentary break pushbutton station with factory-applied hasp arranged so padlock can be used to lock pushbutton in depressed position with control circuit open.

d. Lockout Pushbutton Station: Maintained contact red mushroom pushbutton station with factory-applied hasp arranged so padlock can be used to lock pushbutton in depressed position with control circuit open.

e. Control Relays: Auxiliary and adjustable time-delay relays.

f. Elapsed Time Meters: Heavy duty with digital readout in hrs.

g. Ammeters, Voltmeters, and Frequency Meters: Panel type, 2 ½-in. minimum size with 90 or 120 degree scale, and ±2% accuracy. Where indicated, provide transfer device with off position.

h. Current Sensors: Rated to suit application.

i. Current-Sensing Phase-Failure Relays: Solid-state sensing circuit with isolated contacts for hard-wired connection. Arranged to operate on phase failure, phase reversal, current unbalance of from 5% to 30%, or loss of supply voltage. Provide adjustable response delay.

3.0 E X E C U T I O N

3.1 INSTALLATION

a. General: Install motor controllers and auxiliary motor control devices in accordance with manufacturer's written instructions and approved submittals.

b. Mounting:

1. For control equipment at walls, bolt single units to wall. Mount multiple units on light-weight structural steel channels bolted to wall.

2. For controllers not at walls, provide freestanding racks fabricated of structural steel members and light-weight slotted structural steel channels. Use feet consisting of

3/8 in. thick steel plates, 6 in. square, bolted to floor. Use feet for welded attachment of 1-1/2-in. by 1-1/2-in. by 1/4 in. vertical angle posts not over 3 ft oc. Connect posts with horizontal lightweight slotted steel channels and bolt control equipment to channels.

3. Unless shown otherwise on plans.

c. Motor Controller Fuses and Circuit Breakers: Conform to requirements of Section 16475.

3.2 IDENTIFICATION

a. Comply with Section 16195.

3.3 CONTROL WIRING INSTALLATION

a. Install wiring as specified in Section 16120.

b. Install wiring in enclosures bundled, trained, and supported.

3.4 CONNECTIONS

a. Tighten connectors, terminals, and mountings. Tighten field connected connectors and terminals, including screws and bolts, in accordance with equipment manufacturer's published torque tightening values. Where manufacturer's torquing requirements not indicated, comply with tightening torques specified in UL 486A and 486B.

3.5 FIELD QUALITY CONTROL

a. Manufacturer's Field Services:

1. Supplier's or manufacturer's technician for equipment specified herein shall be present at job site or classroom designated by Owner for minimum mandays indicated, travel time excluded, for equipment adjustment, and training of Owner’s personnel for plant operation. Include minimum of:

(a) ½ manday for Instructional Services.

b. Testing:

1. Reports: Notify Engineer in writing indicating defective materials and workmanship and unsatisfactory test results. Include records of repairs and adjustments made.

2. On completing installation of system, perform following tests.

(a) Make insulation resistance tests of conducting parts of motor control components; and of connecting supply, feeder, and control circuits. For devices containing solid-state components, use test equipment and methods recommended by manufacturer.
(b) Make continuity tests of circuits.
(c) Review updating of final system configuration and parameters where they supplement or differ from those indicated in original Contract Documents.
(d) Review manufacturer's written instructions for installation and testing of motor control devices.

3. Visual and Mechanical Inspection: Include following inspections and related work.

(a) Motor Control Device Ratings and Settings: Verify ratings and settings as installed are appropriate for final loads and final system arrangement and parameters. Recommend final protective device ratings and settings where differences found. Use accepted revised ratings or settings to make final system adjustments.
(b) Inspect for defects and physical damage and nameplate compliance with Drawings.
(c) Exercise and perform operational tests of mechanical components and other operable devices in accordance with manufacturer's written instructions.
(d) Check tightness of electrical connections of devices with calibrated torque wrench. Use manufacturer's recommended torque values.
(e) Clean devices using manufacturer's approved methods and materials.
(f) Verify proper fuse types and ratings in fusible devices.

4. Electrical Tests: Perform following in accordance with manufacturer's written instructions.

(a) Insulation resistance test of motor control devices conducting parts to extent permitted by manufacturer's written instructions. Insulation resistance less than 100 megohms not acceptable.
(b) Use primary current injection to check performance characteristics of motor circuit protectors and for overload relays of controllers for motors 15 hp and larger. Trip characteristics not within manufacturer's published time-current tolerances not acceptable.
(c) Make adjustments for final settings of adjustable trip devices.
(d) Test auxiliary protective features such as loss of phase, phase unbalance, and undervoltage to verify operation.
(e) Check for improper voltages at terminals in controllers having external control wiring when controller disconnect opened. Voltage over 30 v unacceptable.

5. Correct deficiencies and retest motor control devices. Verify by system tests that specified requirements are met.

3.6 ADJUSTING

a. Overvoltage/Undervoltage/Phase Failure Control Relay:

1. Adjust control relay to cause motor starter to drop out at voltage slightly higher than dropout voltage of starter and have dropout time slightly faster than motor starter to ensure if motor starter drops out, relay will drop out.

3.7 CLEANING

a. Remove paint splatters and other spots, dirt, and debris. Touch up scratches and mars of finish to match original finish. Clean devices internally using manufacturer's recommended methods and materials.

- - o 0 o - -

1.0 G E N E R A L

1.1 SUMMARY

a. Section Includes:

1. Motor-control centers (MCCs) for use on ac circuits rated 600 V or less.

b. Overcurrent protective devices and disconnect switches used with motor control centers (MCCs) are specified in Section 16475.

1.2 REFERENCES

a. American National Standards Institute (ANSI):

1. ANSI C2-90 - National Electrical Safety Code (NESC).

b. International Electrical Testing Association (P.O. Box 687, Morrison, CO 80465):

1. ATS - Acceptance Testing Specifications for Electrical Power Distribution Equipment and Systems.

c. National Electrical Manufacturers Association (NEMA):

1. NEMA 250-89 - Enclosures for Electrical Equipment (1000 Volts Maximum).

2. NEMA ICS 2-88 - Industrial Control Devices, Controllers and Assemblies.

3. NEMA ICS 2.3-88 - Instructions for the Handling, Installation, Operation, and Maintenance of Motor Control Centers.

d. Underwriters Laboratories (UL):

1. UL 486A-89 - Wire Connectors and Soldering Lugs for Use With Copper Conductors.

2. UL 845-89 - Motor Control Centers.

1.3 SUBMITTALS

a. Submit the following for Engineer's approval.

b. Shop Drawings:

1. Each MCC including dimensioned plans and elevations and component lists.

2. Show ratings, including short-time and short-circuit ratings, and horizontal and vertical bus ampacities.

3. Schedule of features, characteristics, ratings, and factory settings of individual MCC units.

4. Wiring Diagrams: Interconnecting wiring diagrams pertinent to class and type specified for MCC. Schematic diagram of each type of controller unit indicated.

c. Product Data:

1. Each product and component specified.

d. Test Results:

1. Certified reports of field tests and observations.

e. Operations and Maintenance Data:

1. Maintenance data for MCCs.

1.4 QUALITY ASSURANCE

a. Items provided under this section shall be listed and labeled by UL or other Nationally recognized Testing Laboratory (NRTL). This includes complete MCC and switchgear assembly, including controls section.

1. Term "NRTL" shall be as defined in OSHA Regulation 1910.7.

2. Terms "listed" and "labeled" shall be as defined in National Electrical Code, Article 100.

b. Regulatory Requirements:

1. National Electrical Code: Components and installation shall comply with NFPA 70.

c. Manufacturer's Qualifications: Manufacturer shall be a member of NEMA, regularly engaged in manufacturing LV MCCs complying with requirements of these Specifications, and experienced with at least 5 projects of similar size and scope.

d. Product Selection for Restricted Space: Drawings indicate maximum dimensions for MCCs including clearances between MCCs and adjacent surfaces and items and are based on types and models indicated. MCCs of other manufacturers having equal performance characteristics and complying with indicated maximum dimensions may be considered.

1.5 DELIVERY, STORAGE, AND HANDLING

a. Deliver in shipping splits of lengths that can be moved past obstructions.

b. Store so condensation will not occur on or in MCCs. Provide temporary heaters as required to prevent condensation.

c. Handle MCCs in accordance with NEMA ICS 2.3, "Instructions for Handling, Installation, Operation, and Maintenance of Motor Control Centers." Use factory-installed lifting provisions.

1.6 MAINTENANCE

a. Extra Materials:

1. Spare Fuses: Furnish one spare for every five of each type and rating of fuse and fusible devices installed, but not less than one set of three of each kind. Include spares for:

   (a) Control power fuses.
   (b) Fuses and fusible devices for fused circuit breakers.
   (c) Fuses for fusible switches.

2. Spare Indicating Lights: Furnish 5 of each type installed.

3. Touch-Up Paint: Furnish 3 half-pint unopened containers.

2.0 P R O D U C T S

2.1 MANUFACTURERS

a. Square D Co.

b. General Electric

c. Eaton Corp./Cutler-Hammer Products.

d. Or Equal.

2.2 MOTOR-CONTROL CENTERS

a. Wiring Classification: Class I, Type B, as defined in NEMA ICS 2.

b. Enclosure: NEMA Type 1, gasketed, as defined in NEMA 250, except as otherwise indicated.

c. Compartments:

1. Modular, with individual doors with concealed hinges and quick-captive screw fasteners.

2. For combination starter units provide interlocks so disconnect means must be in off position before door can be opened, and so door cannot be closed with disconnect means in on position, except by consciously operating permissive release device.

d. Interchangeability:

1. Construct compartments so it is possible to remove units without opening adjacent doors, disconnecting adjacent compartments, or disturbing operation of other units in control center.

2. Units requiring same size compartment shall be interchangeable, and compartments shall be constructed to permit ready rearrangement of units such as replacing 3 single units with unit requiring 3 spaces without cutting or welding.

e. Wiring Spaces:

1. Provide each vertical section of structure with horizontal and vertical wiring spaces for wiring to each unit compartment in each section.

2. Provide separate door over vertical wiring space.

3. Provide supports to hold wiring rigidly in place.

f. Meet current NEC requirements for service entrance.

g. Ratings: Provide nominal system voltage, continuous main bus amperage, and short-time and short-circuit-current ratings as indicated and conform with short circuit and coordination study.

2.3 BUSES

a. Material: Tin plated copper.

b. Ampacity Ratings: As indicated for horizontal main buses and vertical bus sized for indicated loads or 300A minimum.

c. Neutral Buses: Full size.

d. Equipment Ground Bus: Non-insulated, horizontal copper bus 2 inches by 1/4 inch, minimum.

e. Horizontal Bus Arrangement: Extend main phase, neutral and ground buses with same capacity entire length of MCC unless otherwise indicated, and provision for future extension at both ends by means of bolt holes and captive bus splice sections or approved equivalent.

f. Natural Disconnect Link: For switchgear assembly having main service disconnect. Arrange to permit disconnecting the switchgear assembly neutral bus from the common ground bus and the incoming service neutrals. Also provide a bolted, un-insulated, 1/4-in. by 2-in. copper bus (main bonding jumper). Arrange to interconnect the neutral and the ground buses to establish the system common ground point.

g. Short-Circuit Withstand Rating: Same as short-circuit current rating of section.

2.4 FUNCTIONAL FEATURES

a. General: Provide modular arrangement of motor controllers, control devices, overcurrent protective devices, transformers, panelboards, instruments, indicating panels, blank panels, and other items mounted in compartments of motor-control center as indicated.

b. Motor Controller Units:

1. Combination controller units; of types and with features, ratings, and circuit assignments indicated.

2. Units with full-voltage, across-the-line, magnetic controllers up to and including Size 3 shall be installed on drawout mountings with connectors that automatically line up and connect with vertical section buses while being racked into their normal energized positions.

3. Units shall have short-circuit current ratings equal to or greater than short-circuit current rating of MCC section.

4. Units in MCCs shall be equipped with pull-apart terminal strips or drawout terminal boards for external control connections.

c. Overcurrent Protective Devices:

1. Provide types of devices with features, ratings, and circuit assignments indicated, as specified in Section 16475.

2. Individual feeder tap units through 225 ampere rating shall be installed on drawout mountings with connectors that automatically line up and connect with vertical section buses while being racked into their normal energized positions.

d. Spaces and Blank Units: Compartments fully bussed and equipped with guide rails or equivalent, ready for insertion of drawout units.

e. Spare Units: Type, sizes, and ratings as indicated, and installed in compartments indicated "spare."

2.5 IDENTIFICATION PRODUCTS

a. Provide identifying devices.

b. Equipment Markers: Provide 2-ply, 1/8-in. thick laminated plastic, engraved equipment markers.

1. Color: Black letters on white background.

2. Nomenclature: Include following, matching terminology on schedules as closely as possible:

a. Equipment name (i.e. motor control center).
b. Equipment Tag No. (i.e. 30-MCC-1).

3. Size: Provide approximate 3-in. by 6-in. (minimum) for equipment.

a. 1-in. high letters for equipment tag number.
b. 1/2-in. high letters for descriptive equipment name.

4. Size: Provide approximate 1-1/2 in. by 3-in. (minimum) for device or component.

a. 1/4-in. high letters for equipment tag number.

b. 1/4-in. high letters for descriptive equipment name.

5. Fasteners: Self-tapping stainless steel screws except contact type permanent adhesive where screws cannot or should not penetrate substrate.

2.6 FINISHES

a. Manufacturer's standard finish suitable for environment in which installed.

2.7 CONCRETE BASES

a. Class "B" as specified in Part 3.

3.0 E X E C U T I O N

3.1 INSTALLATION

a. General: Install MCCs in accordance with NEMA ICS 2.3 "Instructions for Handling, Installation, Operation, and Maintenance of MCCs," and with manufacturer's written installation instructions.

b. Anchor each motor-control center assembly to concrete base in accordance with manufacturer's recommendations. Level and grout sills flush with motor-control center mounting surface.

c. Remove temporary lifting eyes, channels, brackets, and temporary blocking of moving parts from MCC units and components.

3.2 CONCRETE BASES

a. Where concrete slab is indicated under MCC location, provide 4-in. high concrete foundation pad or, as shown on Plans.

3.3 IDENTIFICATION

a. Identify field-installed wiring and components and provide warning signs, as specified in Section 16195.

b. Place wire identification tags at each end of all conductors.

3.4 CONNECTIONS

a. Tighten MCC bus joint bolts and electrical connector and terminal bolts in accordance with manufacturer's installation instructions and torque-tightening values. Where manufacturer's torque values are not stated, use those specified in UL 486A and UL 486B.

3.5 COORDINATION STUDY (Not Applicable)

3.6 FIELD QUALITY CONTROL

a. Manufacturer's Field Services:

1. Supplier's or manufacturer's technician for equipment specified herein shall be present at job site or classroom designated by Owner for minimum of 2 workdays, travel time excluded, for assistance during plant startup, equipment adjustment, and training of Owner’s personnel for plant operation. Include minimum of:

   (a) 2 mandays for Instructional Services.

2. Supplier or manufacturer shall direct services to specific system and equipment operation, maintenance, and troubleshooting.

b Testing:

1. Comply with applicable requirements of InterNational Electrical Testing Association (INETA) Standard ATS, "Acceptance Testing Specifications for Electrical Power Distribution Equipment and Systems."

2. Reports: Notify Engineer in writing indicating defective materials and workmanship and unsatisfactory test results. Include record of repairs and adjustments made.

3. Perform following tests:

   (a) Test insulation resistance of MCC buses; components; and of connecting supply, feeder, and control circuits. For components with solid-state devices or other sensitive components, perform tests in accordance with manufacturer's instructions.
   (b) Make continuity tests of circuits.
   (c) Inspect MCCs for defects and physical damage, testing laboratory labels, circuit connections, and nameplate compliance with up-to-date system drawings.

(d) Perform operational test and exercise of mechanical components and other operable devices in accordance with manufacturer's instruction manual.
(e) Check MCC anchorage, external clearances, and alignment and fit of components including internal elements.
(f) Check tightness of bolted electrical connections with calibrated torque wrench. Refer to manufacturer's instructions for proper torque values.
(g) Perform visual and mechanical inspection and related work for motor control and protective devices.
(h) Device Ratings and Settings: Verify ratings and settings of overload relays, motor circuit protectors, and overcurrent protective devices.

4. Quality Control Testing Program: Assure MCC installation meets specified requirements, is operational within specified tolerances, and provides appropriate protection for systems and equipment.

(a) Test and inspect MCCs in accordance with manufacturer's recommendations and these specifications.
(b) Schedule tests and provide notification at least 7 days in advance of test commencement.
(c) Reports: Prepare written reports of test results and observations. Report defective materials and workmanship. Include complete records of adjustments and corrective action taken.
(d) Labeling: On satisfactory completion of tests and related effort, apply label to tested components indicating results, person responsible, and date.
(e) Test insulation resistance of buses and portions of control wiring that disconnect from solid-state devices through normal disconnecting features. Insulation resistance less than 100 megohms is not acceptable.
(f) Verify appropriate capacity, overcurrent protection, and operating voltage of control power elements including control power transformers and control power wiring.
(g) Check phasing of supply source to bus.
(h) Test motor-control devices.
(i) Test overcurrent protective devices.

5. Retesting: Correct deficiencies and retest. Verify by retests that specified requirements are met.

3.7 CLEANING

a. Inspect interior and exterior of MCCs. Remove paint splatters and other spots, dirt, and debris. Touch up scratches and mars of finish to match original finish.

3.8 PROTECTION

a. Temporary Heating: Apply temporary heat in accordance with manufacturer's recommendation within each section of switchgear throughout periods during which the switchgear is not in a space that is continuously under normal control of temperature and humidity.

- - o 0 o - -

1.0 G E N E R A L

1.1 SUMMARY

a. Section Includes:

1. Exterior lighting fixtures, lamps, ballasts, poles standards, and accessories.

1.2 REFERENCES

a. American Association of State Highway and Transportation AASHTO LTS-1-Standard Officials (AASHTO). Specifications for Structural Supports for Highway Signs, Luminaires, and Traffic Signals.

b. American National Standards Institute (ANSI):

1. ANSI C2-90 - National Electrical Safety Code.

2. ANSI C78.1-91 to C78.1502 - Electric Lamps.

3. ANSI C82.2-84 - Fluorescent Lamp Ballast - Method of Measurement.

4. ANSI C82.4-85 - Ballasts for High-Intensity-Discharge and Low-Pressure Sodium Lamps (Multiple-Supply Type).

5. ANSI C136.13-87 - Roadway Lighting - Metal Brackets for Wood Poles.

6. ANSI C136.30 - Roadway Lighting Equipment - Fiber-Reinforced Plastic (FRP) Lighting Poles.

7. ANSI 05.1-92 - Wood Poles - Specifications and Dimensions.

c. American Society for Testing and Materials (ASTM):

1. ASTM A500 - REV A-90 - Standard Specification for Cold-Formed Welded and Seamless Carbon Steel Structural Tubing in Rounds and Shapes.

2. ASTM B209-90 - Standard Specifications for Aluminum and Aluminum-Alloy Sheet and Plate.

3. ASTM B429-92 - Standard Specifications for Aluminum-Alloy Extruded Structural Pipe and Tube.

d. American Wood Preservers Association (AWPA): AWPA C4 - Poles, Preservative Treatment, Pressure Processed.

e. Institute of Electrical and Electronic Engineers (IEEE):

1. IEEE C62.41-91-IEEE Recommended Practice on Surge Voltages in Low-Voltage AC Power Circuits.

f. Underwriter's Laboratories (UL):

1. UL 773-87 - UL Standard for Safety Plug-In, Locking Type Photocontrols for Use with Area Lighting.

2. UL 844-90 - UL Standard for Safety Electric Lighting Fixtures for Use in Hazardous (Classified) Locations.

3. UL 935-84 - UL Standard for Safety Fluorescent Lamp Ballasts

4. UL 1029-86 - UL Standard for Safety High-Intensity Discharge Lamp Ballasts.

5. UL 1570-88 - UL Standard for Safety Fluorescent Lighting Fixtures.

6. UL 1571-91 - UL Standard for Safety Incandescent Lighting Fixtures.

7. UL 1572-91 - UL Standard for Safety High Intensity Discharge Lighting Fixtures.

1.3 DEFINITIONS

a. Fixture: Complete lighting unit. Fixtures include lamp or lamps and parts required to distribute light, position and protect lamps, and connect lamps to power supply.

b. Lighting Unit: Fixture, or assembly of fixtures with common support, including pole or bracket plus mounting and support accessories.

c. Luminaire: Fixture.

1.4 SUBMITTALS

a. Submit the following for Engineer’s approval.

b. Product Data.

1. Describe fixtures, lamps, ballasts, poles, and accessories.

2. Arrange Product Data in order of fixture designation.

3. Include data on features, poles, accessories, and following:

   (a) Outline drawings of fixtures and poles indicating dimensions and principal features.
   (b) Electrical ratings and photometric data with certified results of independent laboratory tests.

c. Shop Drawings:

1. Detail fixtures and poles and indicating dimensions, weights, methods at field assembly, components, and accessories.

d. Test Results:

1. Certified reports of field tests and observations.

1.5 QUALITY ASSURANCE

a. Items provided under this section shall be listed and labeled by UL or other Nationally Recognized Testing Laboratory (NRTL).

1. Term "NRTL" shall be as defined in OSHA Regulation 1910.7.

2. Terms "listed" and "Labeled" shall be as defined in National Electrical Code, Article 100.

b. Regulatory Requirements:

1. National Electrical Code: Components and installation shall comply with NFPA 70.
2. Comply with ANSI C2, "National Electrical Safety Code."

c. Fixtures for Hazardous Locations: Conform to UL 844 or get Factory Mutual Engineering and Research Corporation (FM) certification for the class and division of hazard.

d. Manufacturers' Qualifications: Firms experienced in manufacturing lighting units that are similar to those indicated for this Project and that have record of successful in-service performance.

1.6 DELIVERY, STORAGE, AND HANDLING

a. Poles:

1. General: Store poles on decay-resistant treated skids at least 1 ft above grade and vegetation. Support pole to prevent distortion and arrange to provide free air circulation.

2. Metal Poles: Retain factory-applied pole wrappings until just before pole installation. For poles with nonmetallic finishes, handle with web fabric straps.

1.7 WARRANTY

a. Special Project Warranty: Submit warranty, mutually executed by manufacturer and the Installer, agreeing to replace external parts of lighting fixtures exhibiting failure of finish as specified below. This warranty is in addition to, and not limitation of, other rights and remedies Owner may have under Contract Documents.

1. Protection of Metal from Corrosion: Warranty against perforation or erosion of finish due to weathering.

2. Color Retention: Warranty against fading, staining, and chalking due to effects of weather and solar radiation.

3. Special Project Warranty Period: 5 yrs, beginning on the date of Substantial Completion.

1.8 MAINTENANCE

a. Extra Materials

1. Furnish extra materials matching products installed as described below, packaged with protective covering for storage, and identified with labels describing contents. Deliver extra materials to Owner.

   (a) Lamps: 10 lamps for each 100 of each type and rating installed. Furnish at least 1 of each type.
   (b) Glass and Plastic Lenses, Covers, and Other Optical Parts: 1 for each 100 of each type and rating installed. Furnish at least 1 of each type.
   (c) Ballasts: 1 for each 100 of each type and rating installed. Furnish at least 1 of each type.
   (d) Globes and Guards: 1 for each 20 of each type and rating installed. Furnish at

least 1 of each type.

2.0 P R O D U C T S

2.1 FIXTURE COMPONENTS, GENERAL

a. Metal Parts: Free from burrs and sharp edges and corners.

b. Sheet Metal Components: Corrosion-resistant aluminum, except as indicated. Form and support to prevent warping and sagging.

c. Housings: Rigidly formed, weather- and light-tight enclosures that will not warp, sag, or deform in use. Provide filter/breather for enclosed fixtures.

d. Doors, Frames, and Other Internal Access Provisions: Smooth operating, free from light leakage under operating conditions, and arranged to permit relamping without use of tools. Arrange doors, frames, lenses, diffusers, and other pieces to prevent accidental falling during relamping and when secured in the operating position. Provide for door removal for cleaning or replacing lens. Arrange for door opening to disconnect ballast.

e. Exposed Hardware Material: Stainless steel.

f. Reflecting Surfaces: Minimum reflectances as follows, except as otherwise indicated:

1. White Surfaces: 85%.

2. Specular Surfaces: 83%.

3. Diffusing Specular Surfaces: 75%.

g. Plastic Parts: Resistant to yellowing and other changes due to aging and exposure to heat and UV radiation.

h. Lenses and Refractors: Materials as indicated. Use heat- and aging-resistant, resilient gaskets to seal and cushion lens and refractor mounting in fixture doors.

i. Photoelectric Relay: UL 773.

1. Contact Relays: Single-throw, arranged to fail in the "on" position and factory set to turn light unit on at 1.5 to 3 footcandles and off at 4.5 to 10 footcandles with 15 sec' minimum time delay.

2. Relay Mounting: In fixture housing.

2.2 FLUORESCENT FIXTURES

a. Fixtures: Conform to UL 1570.

b. Ballasts: Conform to UL 935, certified by Electrical Testing Laboratory (ETL). Labeled by Certified Ballast Manufacturers Association (CBM).

1. Type: High-power factor type rated for -20°C starting and listed for use in outdoor fixtures.

2. Sound Rating: A or B.

3. Voltage: Match connected circuits.

4. Ballasts to have fused protection.

2.3 HIGH-INTENSITY DISCHARGE (HID) FIXTURES

a. Fixtures: Conform to UL 1572.

b. Ballasts: Conform to UL 1029 and ANSI C82.4, provide constant wattage autotransformer (CWA) or regulating high-power factor type, unless otherwise indicated.

1. Operating voltage matches system voltage.

2. Single-Lamp Ballasts: Minimum starting temperature of -30°C.

3. Construct ballasts so open circuit operation will not reduce average life.

4. Ballasts to have fused protection.

c. Instant Restrike Device: Solid-state potted module, mounted inside fixture and compatible with mogul-based HPS lamps, ballasts, and sockets up to 150 watts.

1. Restrike ranges: 105 to 130 vac.

2. Output voltage does not exceed 250 v peak or 150 vac RMS.

2.4 INCANDESCENT LIGHTING FIXTURES

a. Conform to UL 1571.

2.5 FIXTURE SUPPORT COMPONENTS

a. Pole-Mounted Fixtures: Conform to AASHTO LTS-1.

b. Wind-Load Strength: 100 mph and 1.3 gust factor for total support assembly, including pole, base, and anchorage, where used, to carry fixtures, supports, and appurtenances at indicated heights above grade without deflection or whipping.

c. Arm, Bracket, and Tenon Mount Materials: Match the poles.

d. Mountings, Fastenings, and Appurtenances: Corrosion-resistant components compatible with poles and fixtures that will not cause galvanic action at contact points. Provide mountings that will correctly position luminaire to provide indicated light distribution.

e. Pole Shafts: As shown on Plans.

f. Pole Bases: Anchor type with galvanized steel hold-down or anchor bolts, leveling nuts, and bolt covers.

g. Steel Poles: Steel tubing conforming to ASTM A500, Grade B, carbon steel with minimum yield of 46,000 psi. Poles are 1-piece construction up to 40 ft in length and have access handhole in wall.

h. Steel Mast Arms: Fabricated from 2-in. pipe, continuously welded to pole attachment plate and having span and rise as indicated.

i. Metal Pole Brackets: Designed to match pole metal. Provide cantilever brackets without underbrace, in the sizes and styles indicated, with straight tubular end section to accommodate the fixture.

j. Pole-Top Tenons: Fabricated to support fixture indicated and securely fastened to the pole top.

k. Metal Pole Grounding Provisions: Welded 1/2-in. threaded lug, accessible through handhole.

2.6 LAMPS

a. Conform to ANSI Standards, C78 series, applicable to each type of lamp. Provide fixtures with indicated lamps. Where lamps are not indicated, provide lamps recommended by manufacturer.

2.7 FINISH

a. Metal Parts: Manufacturer's standard finish except as otherwise indicated. Finish applied over corrosion-resistant primer, free of streaks, runs, holidays, stains, blisters, and similar defects. Remove poles, fixtures, and accessories showing evidence of corrosion or finish failure during Project warranty period and replace with new items.
b. Other Parts: Manufacturer's standard finish except as otherwise indicated.

3.0 E X E C U T I O N

3.1 INSTALLATION

a. Set units plumb, square, level, and secure according to manufacturer's written instructions and approved submittals.

3.2 CONCRETE FOUNDATIONS

a. Construct concrete foundations with 3,000-lb, 28-day concrete.

b. Embedded Poles: Set poles to indicated depth, but not less than 1/6 of pole length below finish grade. Dig holes large enough to permit use of tampers full depth of hole. Backfill in 6-in. layers and thoroughly tamp each layer so compaction of backfill is equal to or greater than that of undisturbed earth.

c. Pole Installation: Use fabric web slings (not chain or cable) to raise and set poles.

d. Fixture Attachment: Fasten to indicated structural supports.

e. Fixture Attachment with Adjustable Features or Aiming: Attach fixtures and supports to allow aiming for indicated light distribution.

f. Lamp fixtures with indicated lamps according to manufacturer's instructions. Replace malfunctioning lamps.

3.3 GROUNDING

a. Ground fixtures and metal poles as specified in Section 16452.

1. Poles: Install 10-ft driven ground rod at each pole.

2. Nonmetallic Poles: Ground metallic components of lighting unit and foundations. Connect fixtures to grounding system with No. 6 AWG conductor.

3.4 FIELD QUALITY CONTROL

a. Inspect installed units for damage.

b. Provide advance notice of dates and times for field tests.

c. Provide instruments to make and record test results.

d. Tests: Verify normal operation of lighting units after installing fixtures and energizing circuits with normal power source. Include the following:

1. Photometric Tests: Measure light intensities at locations where specific illumination performance is indicated. Use photometers with calibration referenced to NIST standards.

2. Check for excessively noisy ballasts.

3. Check for uniformity of illuminations.

4. Written report of tests indicating actual illumination results.

e. Replace or repair damaged and malfunctioning units and retest.

3.5 ADJUSTING AND CLEANING

a. Clean components on completion of installation. Use methods and materials recommended by manufacturer.

b. Adjust aimable fixtures to provide required light intensities.

- - o 0 o - -